DYNAPAC
CA302PD
SPARE PARTS
CATALOGUE

DynapacParts.com
800-889-0661

SCA302PD-2EN4

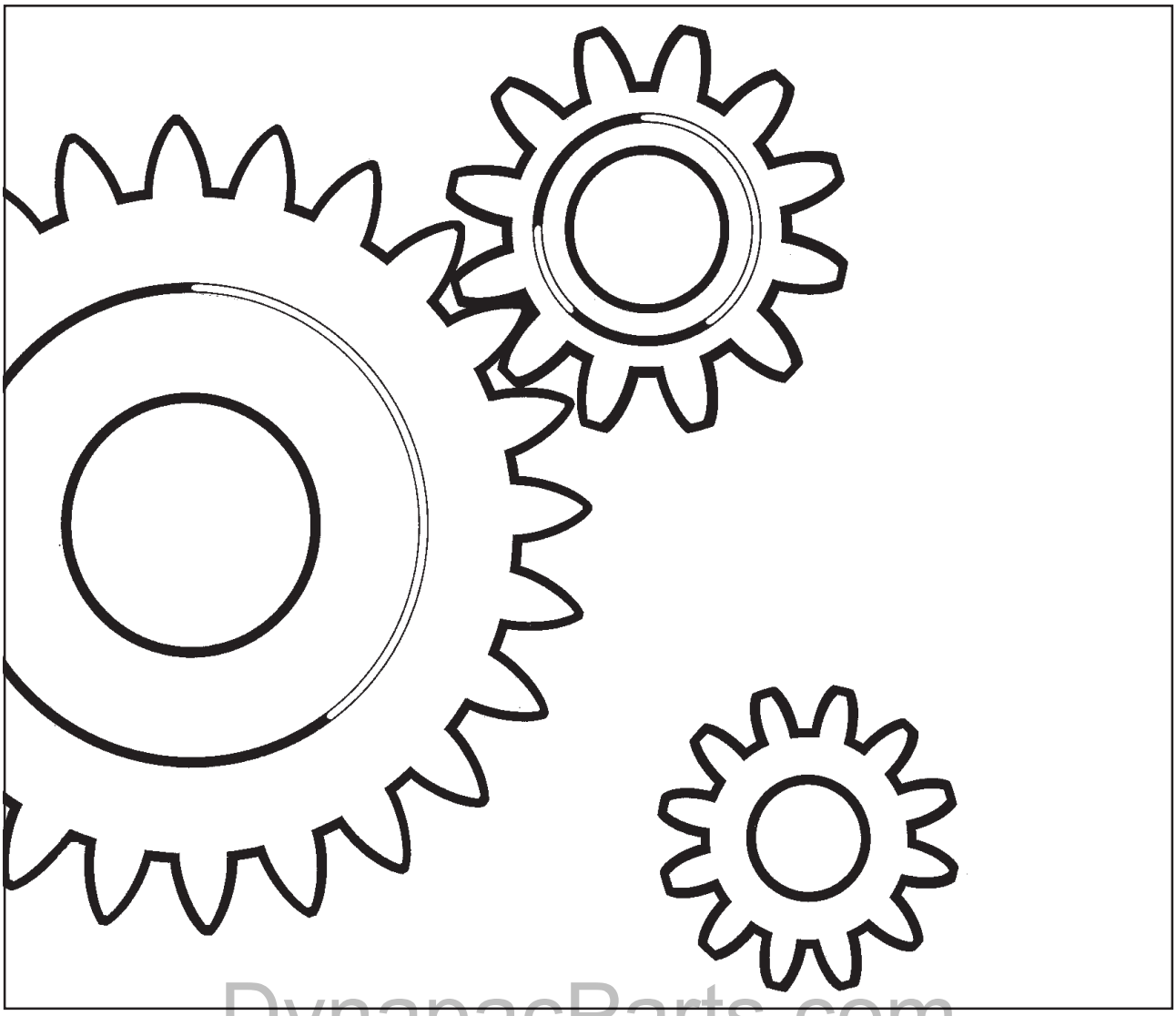

DynapacParts.com
800-889-0661

DYNAPAC
Part of the Atlas Copco Group
Box 504, SE-371 23 Karlskrona, Sweden
Phone: +46 455 30 60 00, Fax: +46 455 30 60 10
www.dynapac.com

DynapacParts.com
800-889-0661

DynapacParts.com
800-889-0661

DYNAPAC

Vibratory Roller
CA302PD

Spare Parts Catalogue
SCA302PD-2EN3

DynapacParts.com
800-889-0661

Valid from roller serial number:

**68510319*-*

Diesel engines:

DEUTZ BF4M2012C

Published catalogue issues valid for these rollers:

Catalogue	*Issue date*	*Valid for serial numbers*
SCA302PD-2EN1	*2003-05*	*Replaced by SCA302PD-2EN2*
SCA302PD-2EN2	*2004-10*	*Replaced by SCA302PD-2EN3*
SCA302PD-2EN3	*2006-01*	*Replaced by SCA302PD-2EN4*
SCA302PD-2EN4	*2008-09*	**68510319*-*

DynapacParts.com
800-889-0661

We reserve the right to change specifications without notice.
Printed in Sweden.

DYNAPAC
Part of the Atlas Copco Group

RESERVDELSBESTÄLLNING

Följande uppgifter ska lämnas vid beställning av reservdelar för att undvika leveransfel:

1. Maskintyp.
2. Vältens serienummer.
3. Antal av önskad reservdel.
4. Reserdelens artikelnummer.
5. Reservdelens benämning.
6. Måttuppgifter vid beställning av metervara.

ORDERING SPARE PARTS

To avoid errors in delivery, please give the following information when ordering spare parts:

1. Type of machine.
2. Roller serial number.
3. Quantity required.
4. Part number.
5. Parts denomination.
6. Dimensions when ordering per length.

DynapacParts.com
800-889-0661

ERSATZTEILBESTELLUNG

Zur Vermeidung von Fehllieferungen sind bei der Bestellung von Ersatzteilen folgende Angaben zu machen:

1. Maschinentyp.
2. Herstellungsnummer.
3. Bestellmenge. (Quantity)
4. Ersatzteilnummer. (Part Nº)
5. Ersatzteilbenennung. (Denomination)
6. Massangaben bei Bestellung von Meterware.

ORDINI DI RICAMBI

Per evitare errori nelle consegne di ricambi, Vi preghiamo di comunicarci le seguenti informazioni al momento dell 'ordinazione:

1. Tipo di macchina.
2. Numero di serie della macchina.
3. Quantità dei pezzi desiderati. (Quantity)
4. Numero di codice del pezzo. (Part Nº)
5. Descrizione del pezzo di ricambio. (Denomination)
6. Misura, in caso di ordine per metro.

PEDIDO DE RECAMBIOS

Para evitar errores en las entregas, deberán indicarse los siguientes datos al hacer un pedido de recambios:

1. Tipo de máquina.
2. Número de serie.
3. Cantidad de piezas deseadas. (Quantity)
4. Número de artículo de la pieza de recambio. (Part Nº)
5. Denominación de la pieza. (Denomination)
6. Indíquese la medida al solicitar un artículo que se expide por metros.

COMMANDE DE PIECES DE RECHANGE

Les indications suivantes doivent être fournies lors de la commande de piéces de rechange, afin d'éviter toute erreur de livraison:

1. Type de machine.
2. Numéro de série.
3. Quantité désirée de pièce de rechange. (Quantity)
4. Numéro de la piéce de rechange. (Part Nº)
5. Dénomination de la piéce de rechange. (Denomination)
6. Longueur en cas de commande au mètre.

YOUR AGENT/DEALER:

DynapacParts.com
800-889-0661

Text pages

The text pages is structured as the picture on the right.

1. This is the remarks for specific items and the descriptions of the remarks is at the bottom of the parts list.

2. Parts indicated by a dot and moved to the right are included when buying the assembled unit above.

3. Spare parts and service code for a specific part, mainly for internal use at Dynapac. "A" = Service part, "B" = Fast moving part, "C" = Suggested exchanged part and "D" = Regular spare part.

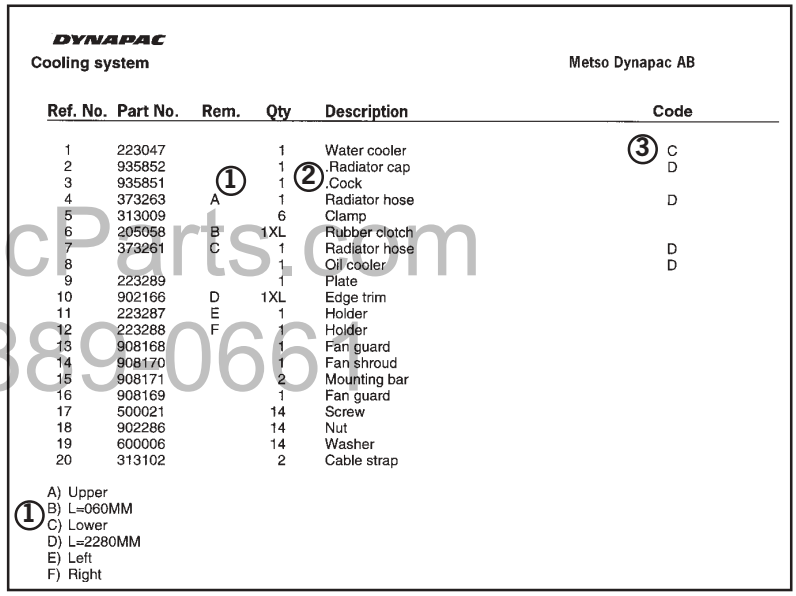

DYNAPAC

Cooling system — Metso Dynapac AB

Ref. No.	Part No.	Rem.	Qty	Description	Code
1	223047		1	Water cooler	③ C
2	935852		1	.Radiator cap	D
3	935851	①	1	②.Cock	
4	373263	A	1	Radiator hose	D
5	313009		6	Clamp	
6	205058	B	1XL	Rubber clotch	
7	373261	C	1	Radiator hose	D
8			1	Oil cooler	D
9	223289		1	Plate	
10	902166	D	1XL	Edge trim	
11	223287	E	1	Holder	
12	223288	F	1	Holder	
13	908168		1	Fan guard	
14	908170		1	Fan shroud	
15	908171		2	Mounting bar	
16	908169		1	Fan guard	
17	500021		14	Screw	
18	902286		14	Nut	
19	600006		14	Washer	
20	313102		2	Cable strap	

① A) Upper
B) L=060MM
C) Lower
D) L=2280MM
E) Left
F) Right

Changes

PARTS INFO	SERVICE INFO	GROUP	PAGE	NOTES

Notes

DynapacParts.com
800-889-0661

Notes

DynapacParts.com
800-889-0661

DynapacParts.com
800-889-0661

DYNAPAC

PÄRMETIKETT

För att undvika fel vid reservdelsbeställning finns här nedan två etiketter som passar i fickorna på pärmarnas ryggar. På dessa kan man se från vilket vältnummer av aktuell maskin reservdelskatalogen gäller. Gör så här:

1. Tag denna sida ur pärmen.
2. Klipp ut etiketten till **VÄNSTER** (1) och sätt in den i fickan på **DENNA** pärmens rygg.
3. Finns det en etikett till **HÖGER** (2), kan denna användas på pärmen för **FÖREGÅENDE** utgåva av denna katalog.
4. Kasta detta papper.

BINDER LABEL

To avoid errors when ordering spare parts use the labels below to identify the catalogues on the back of the binder. The label contain the serial number range for which the catalogue is valid. Do like this:

1. Remove this page from the binder.
2. Cut out the **LEFT** label (1) and put it on **THIS** binders back.
3. If there is a label to the **RIGHT** (2), it can be used on the binder for **PRECEDING** issue of this catalogue.
4. Throw away this paper.

DynapacParts.com
800-889-0661

KATALOG-BESCHRIFTUNG

Zur Vermeidung von Fehlen bei der Ersatzteilbestellung benutzen Sie bitte die unteren Beschriftungen, um die Kataloge auf der Rückseite zu kennzeichen. Auf der Beschriftung ist angegaben, für welche Maschinennummern der jeweilige Katalog gültig ist. Ablauf:

1. Nehmen Sie dieses Blatt aus dem Katalog.
2. Schneiden Sie die **LINKE** Beschriftung (1) aus. Schieben Sie die Beschriftung in die tasche auf **DEM** Katalogrücke.
3. Sollte die Beschriftung unten **RECHTS** (2) mitgeliefert werden, kennzeichen Sie damit bitte die **ÄLTERE** Ausführung dieses Kataloges.
4. Den Rest dieses Blattes bitte vernichten.

ETICHETTA POSTA SUL RACCOGLITORE

Per evitare errori quando ordinate pezzi di ricambio, usate le etichette in calce che servono ad identificare i cataloghi sul retro del raccoglitore. L'etichetta indica il numero di matricola delle maccine prese in considerazione nel catalogo.

1. Rimuovete questa pagina dal raccoglitore.
2. Ritagliate l'etichetta posta a **SINISTRA** (1) e ponetela sul retro **DEL** raccoglitore.
3. Se trovate anche un'etichetta sulla **DESTRA** (2), ritagliatela e ponetela sul raccoglitore relativo alla **PRECEDENTE** edizione del catalogo.
4. Distruggete questo foglio.

ETIQUETA PARA LA CARPETA

Para evitar errores al pedir repuestos utilicen las etiquetas abajo descritas para identificar los catálogos en la parte trasera de la carpeta. En la etiqueta se ven los números de referencia de la serie para la cual es válido el catálogo. Instrucciones:

1. Quitar esta página de la carpeta.
2. Corta la etiqueta **IZQUIERDA** (1) y ponerla est **ESTA** carpeta en la parte trasera.
3. Si hay una etiqueta en la parte **DERECHA** (2) se puede utilizar en la carpeta para el catálogo que **PRECEDE** a esta.
4. Tirar esta hoja.

ETIQUETAGE DU CATALOGUE

Afin d'éviter des erreurs lors de commandes de pièces de rechange, nous vous conseillons d'apposer les marquages ci-dessous à l'arrière du classeur, pour identifier les catalogues. Ce marquage indique les numéros de série pour lesquels le catalogue est adapté. Il convient de procéder de la façon suivante:

1. Retirez cette page du classeur.
2. Découpez l'étiquette de **GAUCHE** (1), et apposez-la à l'arrière de **CE** catalogue.
3. Si il y a une étiquette à **DROITE** (2), vous pourrez l'apposer sur le classeur de l'edition **PRECEDENTE** du catalogue.
4. Détruire cetta feuille.

1.

DynapacParts.com
800-889-0661

CA302PD

Catalogue **SCA302PD-2EN4**
Valid **from** serial number:
***68510319*-**

DynapacParts.com
800-889-0661

DynapacParts.com
800-889-0661

TABLE OF CONTENTS

Page

CA302PD SN 68510319 - 68511199 2

Service kits 4

Service kits 6
939568 Service kit 50 h 8
939569 Service kit 500 h 10
939570 Service kit 1000 h 12

Repair kits 14

938558 Steering hitch kit 16
938894 Eccentric shaft kit 18
938891 Drum rotation kit 20
938881 Shock absorber kit, drum 22

Frame 24

Frames 26
Scrapers and beam Up to 68X10453 28
Scrapers and beam From 68X10454 30
Hitch 32
Structure 34
Hood latch control Option 38
Noise suppression, air inlet Option 40
Drum shroud Option From 68X10454 42

Drum 44

Drum 46
Drum cartridge Vibration side Up to 68X10970 48
Drum cartridge Vibration side From 68X10971 50
Drum cartridge Drive side Up to 68X10970 52
Drum cartridge Drive side From 68X10971 54
372987 Drum gear 56

Engine 58

Engine Deutz BF4M2012C Up to 68X10468 60
Engine Deutz BF4M2012C From 68X10469 62
Cooling system 64
Cooling system 68
Combustion air system Up to 68X10323 70
Combustion air system From 68X10324 72
Fuel system 74
Exhaust system 76
High mounted exhaust system Option 78

Transmission 80

Rear axle and wheels Up to 68X10705 82
Rear axle and wheels From 68X10706 Up to 68X10720 84
Rear axle and wheels From 68X10721 Up to 68X10842 86
Rear axle and wheels From 68X10843 88
383857 Rear axle 90
Differential with limited slip 92
Differential housing and brakes 94
Planet gear 96
383856 Rear axle No-Spin, Option 98
Differential with No-Spin 100
Differential housing and brakes 94
Planet gear 102

DynapacParts.com
800-889-0661

TABLE OF CONTENTS

Page

Hydraulic system 104

Propulsion system, Front 106
371509 Propulsion motor 108
Propulsion system, Rear 110
374137 Propulsion motor Up to 68X10373 114
373361 Propulsion motor From 68X10374 118
Vibration system 122
380145 Hydraulic motor, vibration 124
Steering system 126
392002 Steering cylinder Up to 68X10966 128
375031 Steering cylinder Up to 68X10966 130
372424 Pilot valve, steering 132
Brake system 134
Hydraulic oil tank 136
Hydraulic oil tank 138
Central test panel hydraulic 140
Dual speed drum drive Option 142

Electrical equipment 144

Electric system 146
Relay and Fuses 148
Instrument box 150
Instrument panel Main 152
Instrument panel Upper left 154
Instrument panel Upper right 156
Instrument panel Lower left 158
Instrument panel Lower right 160
Emergency stop panel Up to 68X10373 162
Emergency stop panel From 68X10374 164
Driving lights Option 166
Working lights Option 170
Rotating beacon Option 172
Compaction meter Option Up to 68X10371 174
Compaction meter Option From 68X10372 176
Speedometer and frequency meter Option Up to 68X10467 178
Speedometer and frequency meter Option From 68X10468 180
Tachograph Option 182
Tachograph, platform Option 184
Tachograph , cab Option 186
Tachograph, simple cab Option 188
Back-up alarm Option Up to 68X10565 190
Back-up alarm Option From 68X10566 192
Protecting cover, Headlight Option 194
Field computer assembly Option 196
Compaction Analyzer Option From 68X10372 198

Drivers platform 200

Drivers platform 202
Drivers platform, for cab 204
Drivers seat Standard platform 206
Drivers seat Turn-over platform 208
Drivers seat Turn-over in cab 210
359918 Steering column 212
Steering system 214
Turning Controls 216
Turning Carrier 218
Forward and reverse control 220
Speed limiter Option 222
Engine control Up to 68X10461 224

DynapacParts.com
800-889-0661

TABLE OF CONTENTS

Page

Engine control From 68X10462 226
Rops and fops 228
Cab 383030 230
Cab Interior 232
Cab Inside panels 234
Cab Screens 236
Cab Door 240
Cab Wipers front and rear 242
Cab Mirror, Sun curtain 244
Cab Electric 246
Cab Heater system 248
385434 Cab heater, cpl 250
Cab Cable harness 252
Cab Work lights 254
Cab Exterior, rear mirror 256
Radio and cassette/cd player Option 258
Cab, 12V contact From 68X10372 260
Rear mirror Option 262
Simple Cab mounting Option 264
Cab 380656 266
Cab Screens 268
Cab Door, left side 272
Cab Interior rear mirror 274
Wiper arm with blade, front 276
Cab Electric 278
Cab mounting 280
Cab 378308 282
Cab Screens 284
Cab Door, left side 288
Cab Interior rear mirror 274
Wiper arm with blade, front 276
Cab Electric 278

Decals 290

Decals 292
Decals 294

Standard equipment 296

Standard equipment 298

Optional equipment 300

Tool equipment 302
SMV-sign, First aid box 304
Canopy 306
Levelling blade, metal parts 308
392002 Steering cylinder Up to 68X10966 128
Levelling blade, hydraulic parts 310
Levelling blade control 312
Air conditioner assembly 314
Condensor assembly 316
Compressor assembly 318
Evaporator assembly 320
Anti-spin CA Up to ECN04171 322
Anti-spin CA From ECN04171 324
Anti spin, Potentiometer installation 326
Anti spin, Hydraulic 328
Roof hatch 330
Fire extinguisher assembly 332
Heater, Simple cab Option 334
385222 Heater 336

DynapacParts.com
800-889-0661
DynapacParts.com
800-889-0661

TABLE OF CONTENTS

Page

PD-Scrapers, Special Field kit ---------- 338

DynapacParts.com
800-889-0661

DynapacParts.com
800-889-0661

DynapacParts.com
800-889-0661

DynapacParts.com
800-889-0661

DynapacParts.com
800-889-0661

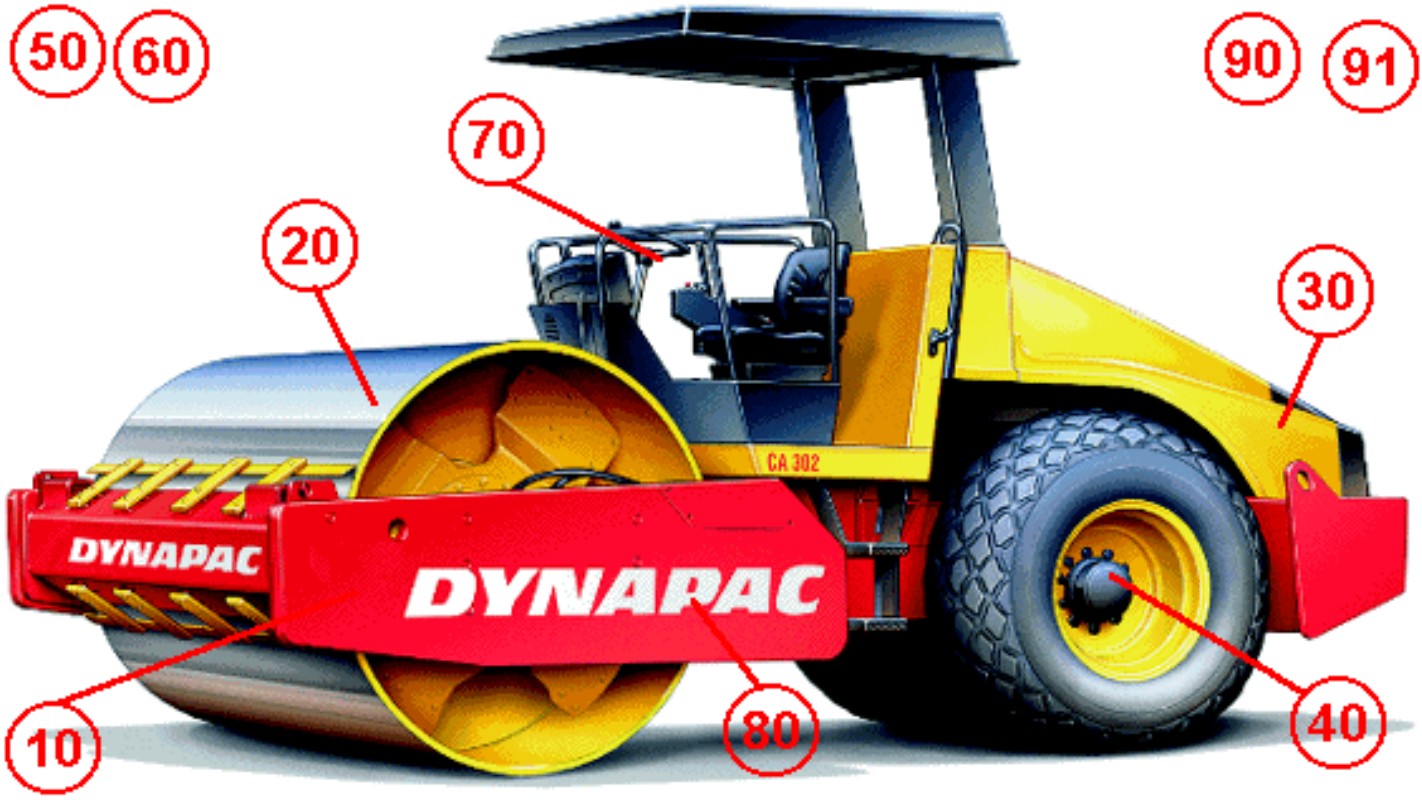

DynapacParts.com
800-889-0661

Ref. No.	Part No.	Rem.	Qty	Description	Code
1				Service kits (Page 4)	
2				Repair kits (Page 14)	
10				Frame (Page 24)	
20				Drum (Page 44)	
30				Engine (Page 58)	
40				Transmission (Page 80)	
50				Hydraulic system (Page 104)	
60				Electrical equipment (Page 144)	
70				Drivers platform (Page 200)	
80				Decals (Page 290)	
90				Standard equipment (Page 296)	
91				Optional equipment (Page 300)	

DynapacParts.com
800-889-0661

DynapacParts.com
800-889-0661

DynapacParts.com
800-889-0661

DynapacParts.com
800-889-0661

Service kits

Ref. No.	Part No.	Rem.	Qty	Description		Code
-1				Service kits (Page 6)		
1	939568			Service kit (Page 8)	50 h	
2	939569			Service kit (Page 10)	500 h	
3	939570			Service kit (Page 12)	1000 h	

DynapacParts.com
800-889-0661

DynapacParts.com
800-889-0661

DynapacParts.com
800-889-0661

DynapacParts.com
800-889-0661

Service kits

Ref. No.	Part No.	Rem.	Qty	Description	Code
1	939568			Service kit (Page 8) 50 h	
2	939569			Service kit (Page 10) 500 h	
3	939570			Service kit (Page 12) 1000 h	

DynapacParts.com
800-889-0661

DynapacParts.com
800-889-0661

939568 Service kit 50 h

17825

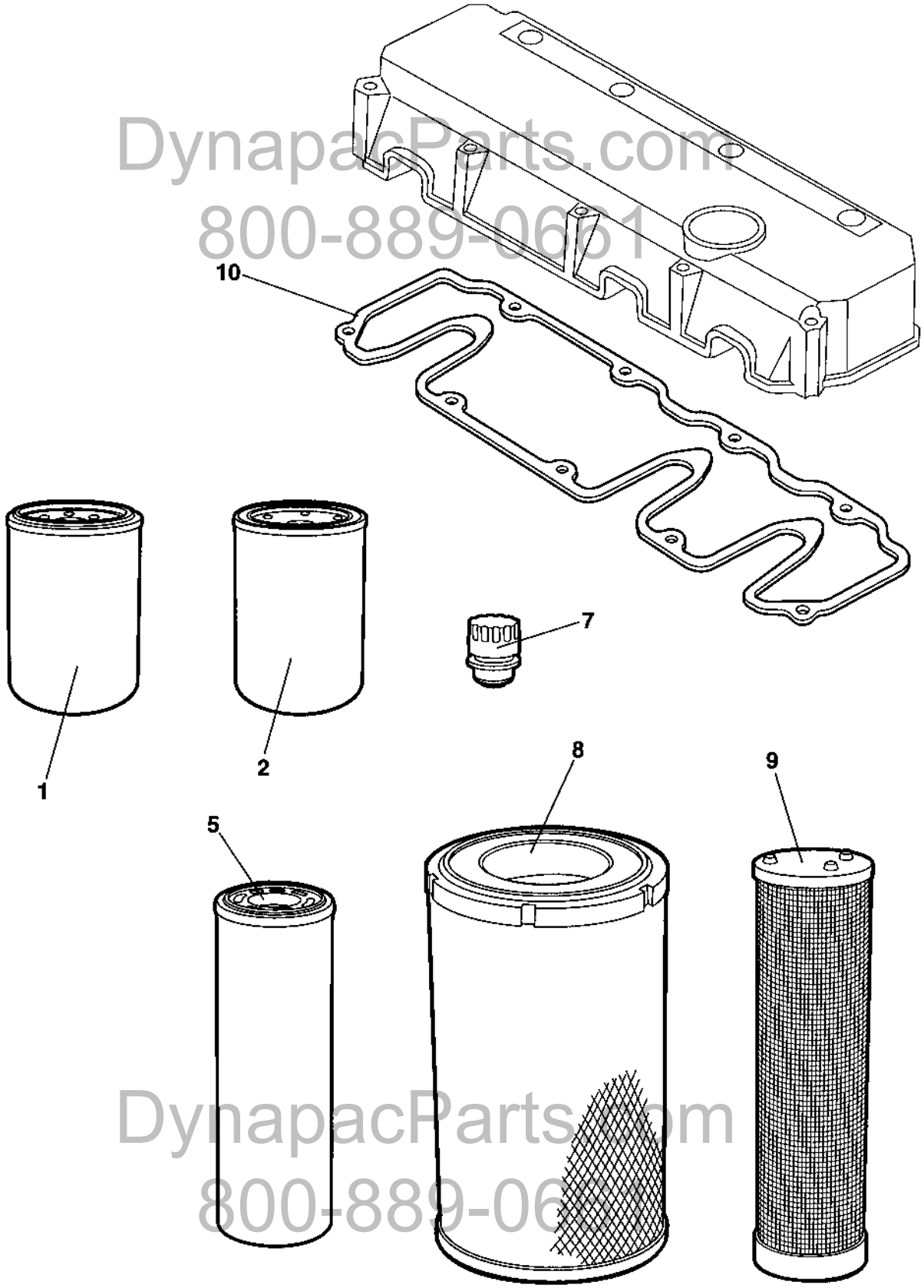

DynapacParts.com
800-889-0661

939568 Service kit 50 h

Ref. No.	Part No.	Rem.	Qty	Description		Code
	939568			Service kit (Page 8)	50 h	
1	903942		1	Oil filter element		A
2	939581		1	Fuel filter element		A
5	372229		2	Hydraulic oil filter element		A

DynapacParts.com
800-889-0661

DynapacParts.com
800-889-0661

939569 Service kit 500 h

17825

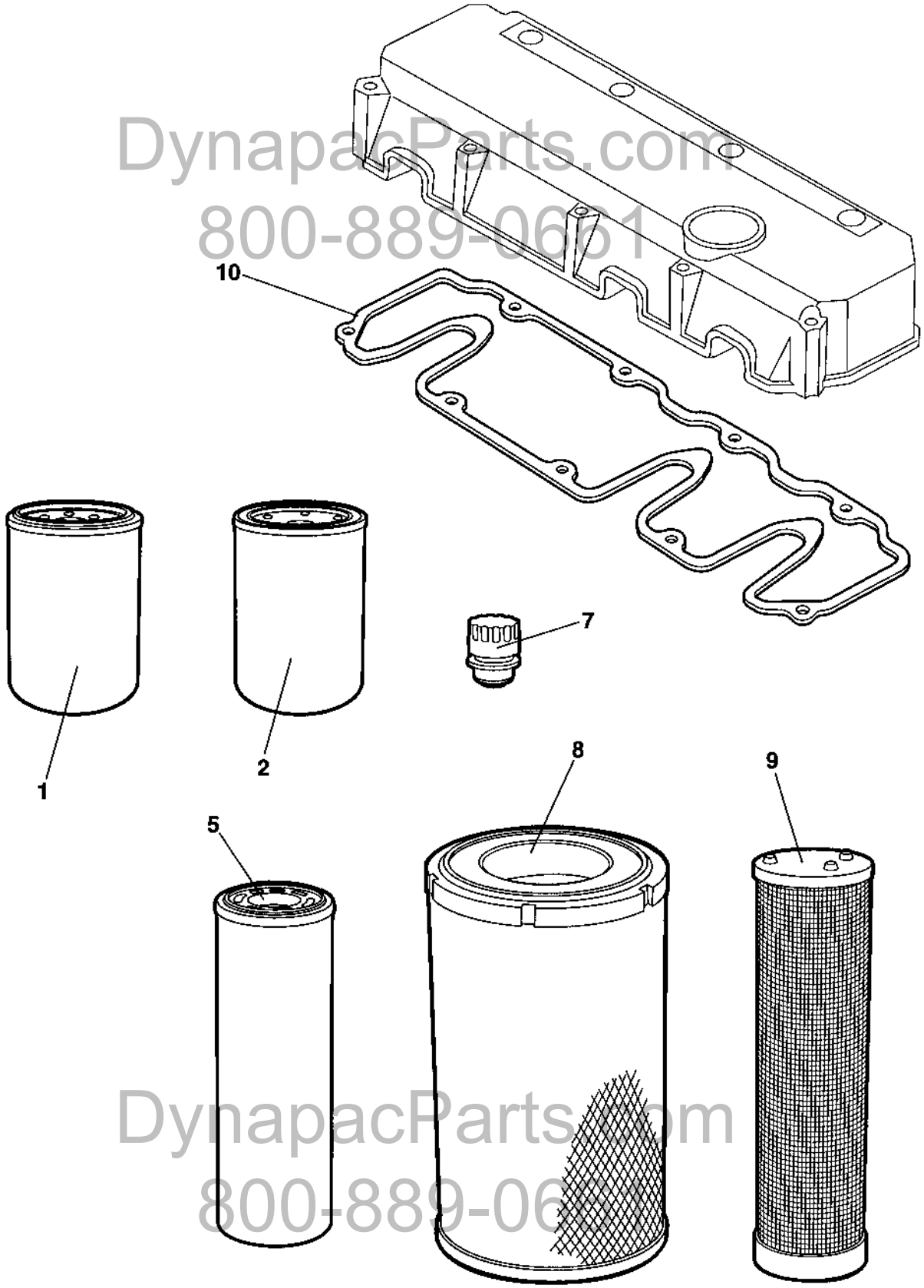

DynapacParts.com
800-889-0661

939569 Service kit 500 h

Ref. No.	Part No.	Rem.	Qty	Description		Code
	939569			Service kit (Page 10)	500 h	
1	903942		1	Oil filter element		A
2	939581		1	Fuel filter element		A
8	908450	1	1	Air filter element,	Main	A

1) Main

DynapacParts.com
800-889-0661

DynapacParts.com
800-889-0661

939570 Service kit 1000 h

17825

DynapacParts.com
800-889-0661

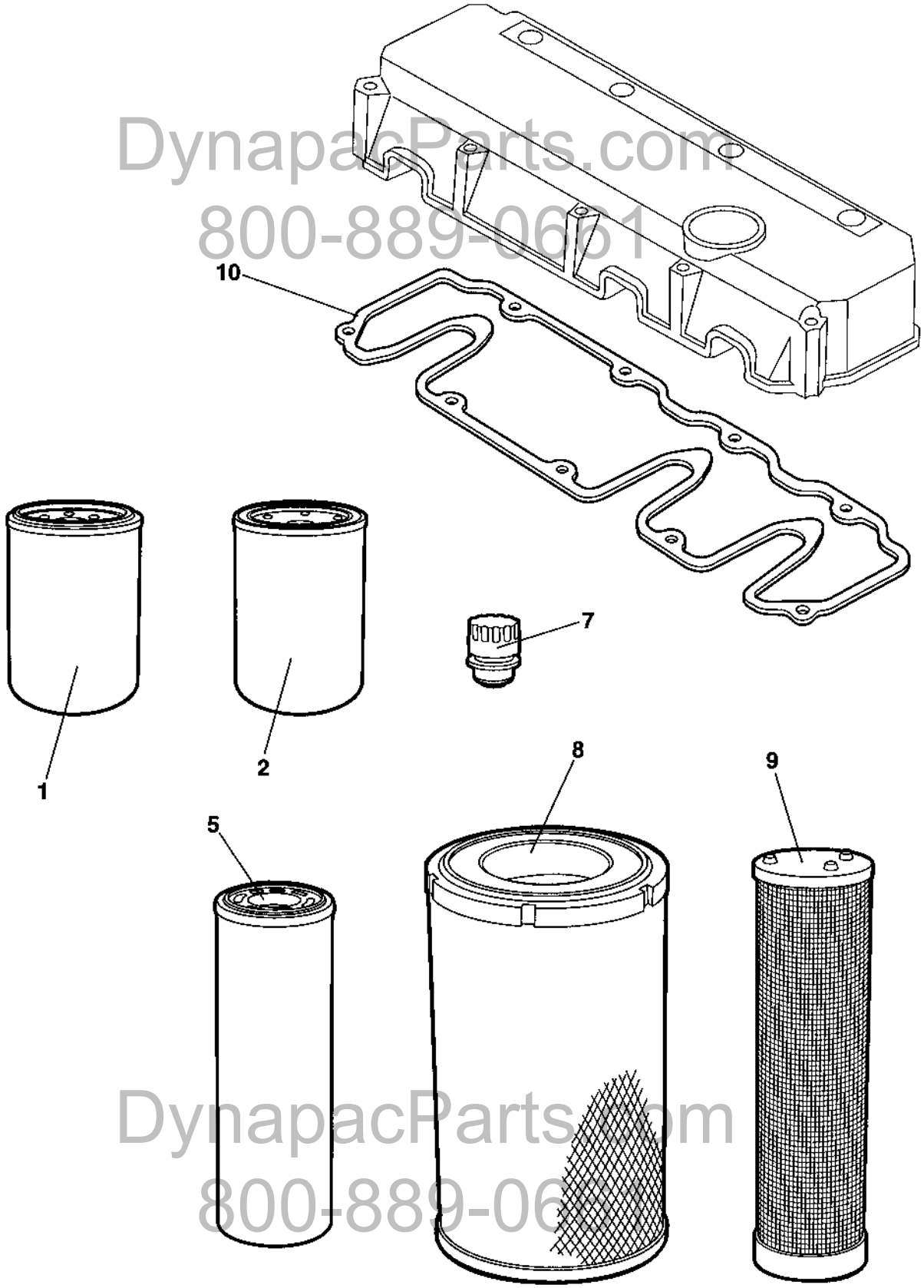

DynapacParts.com
800-889-0661

939570 Service kit 1000 h

Ref. No.	Part No.	Rem.	Qty	Description		Code
	939570			Service kit (Page 12)	1000 h	
1	903942		1	Oil filter element		A
2	939581		1	Fuel filter element		A
5	372229		2	Hydraulic oil filter element		A
7	357138		1	Ventilating filter		A
8	394686	1	1	Air filter element, main		A
9	394687	2	1	Air filter element, safety		A
10	939562		1	Valve cover gasket		

1) Main
2) Safety

DynapacParts.com
800-889-0661

DynapacParts.com
800-889-0661

DynapacParts.com
800-889-0661

DynapacParts.com
800-889-0661

Repair kits

Ref. No.	Part No.	Rem.	Qty	Description	Code
5	938558			Steering hitch kit (Page 16)	
10	938894			Eccentric shaft kit (Page 18)	
20	938891			Drum rotation kit (Page 20)	
30	938881			Shock absorber kit, drum (Page 22)	

DynapacParts.com
800-889-0661

DynapacParts.com
800-889-0661

938558 Steering hitch kit

938558

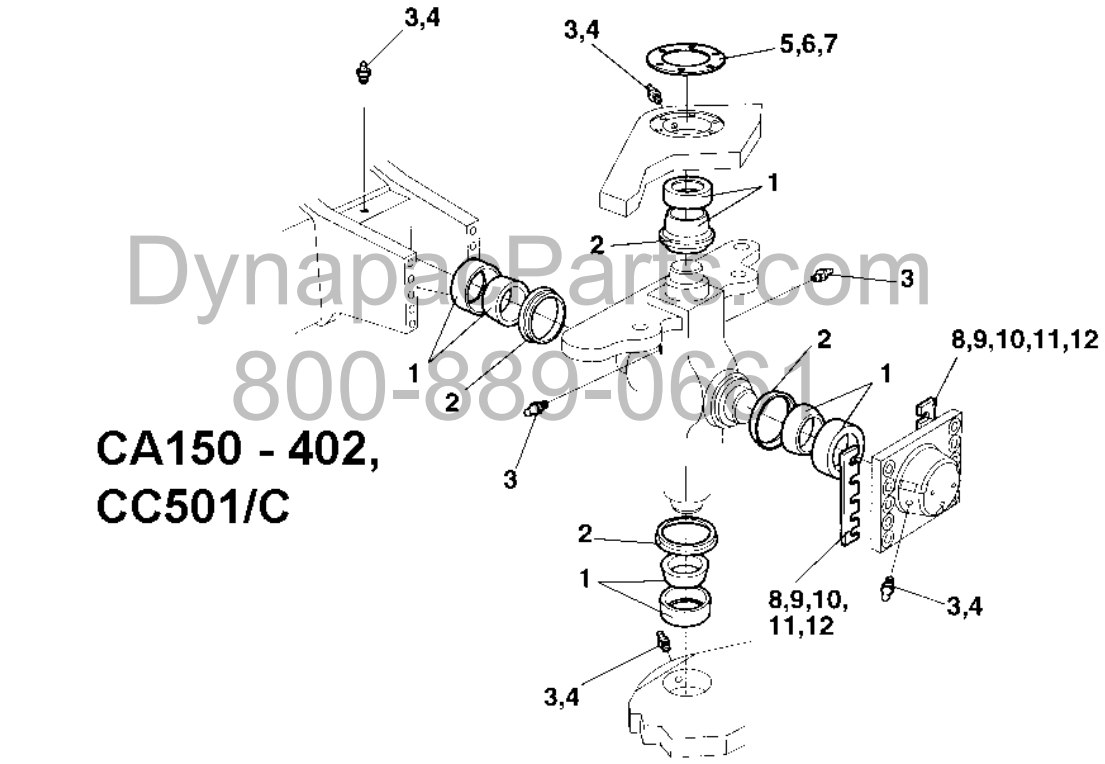

CA150 - 402,
CC501/C

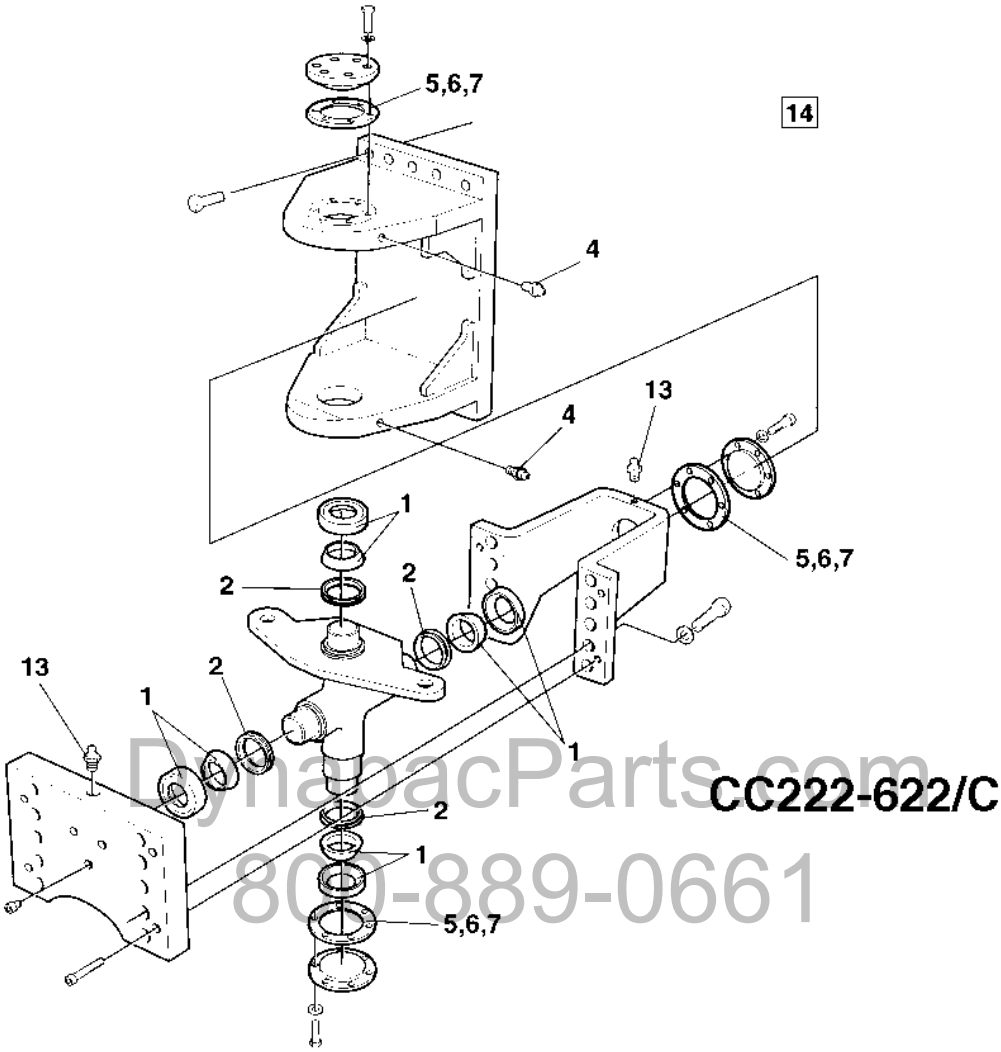

CC222-622/C

DynapacParts.com
800-889-0661

938558 Steering hitch kit

Ref. No.	Part No.	Rem.	Qty	Description		Code
	938558			Steering hitch kit (Page 16)		
1	100040		4	Axial ball bearing		D
2	167032		4	Lip-type oil seal		D
3	310008	2	3	Grease nipple		D
4	926214		2	Grease fitting		D
5	337045		3	Shim	T=1,0 mm	D
6	345874		3	Shim	T=0,35 mm	D
7	345875		3	Shim	T=0,10 mm	D
8	345871	1	2	Shim	T=1,0 mm	D
9	345872	1	2	Shim	T=0,35 mm	D
10	345873	1	2	Shim	T=0,10 mm	D
11	380993	1	2	Shim	T = 2,0 mm	D
12	384498	1	2	Shim	T = 0,15 mm	D
13	929863	3	1	Grease nipple		D
14	904663		1	Lube grease	" DYNAPAC special approved "	
15			1	Instructions		

1) Valid for CA150-402 and CC501/C
2) Valid for CC501/C
3) Valid for CC222/232/322/422/432/522/622/C

DynapacParts.com
800-889-0661

DynapacParts.com
800-889-0661

938894 Eccentric shaft kit

VALS3

DynapacParts.com
800-889-0661

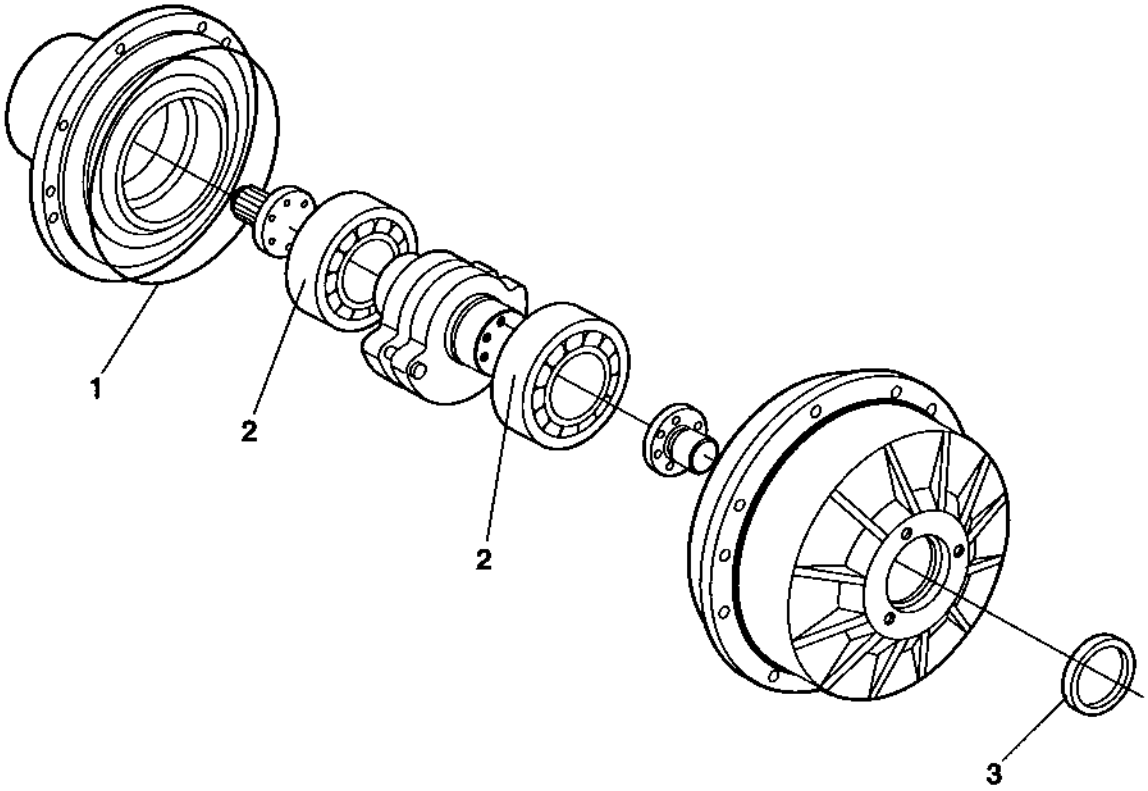

DynapacParts.com
800-889-0661

938894 Eccentric shaft kit

Ref. No.	Part No.	Rem.	Qty	Description	Code
	938894			Eccentric shaft kit (Page 18)	
1	900776		1	O-ring	D
2	900784		2	Cylinder roller bearing	
3	900782		1	Seal ring	D

DynapacParts.com
800-889-0661

DynapacParts.com
800-889-0661

938891 Drum rotation kit

RAMLAGER

DynapacParts.com
800-889-0661

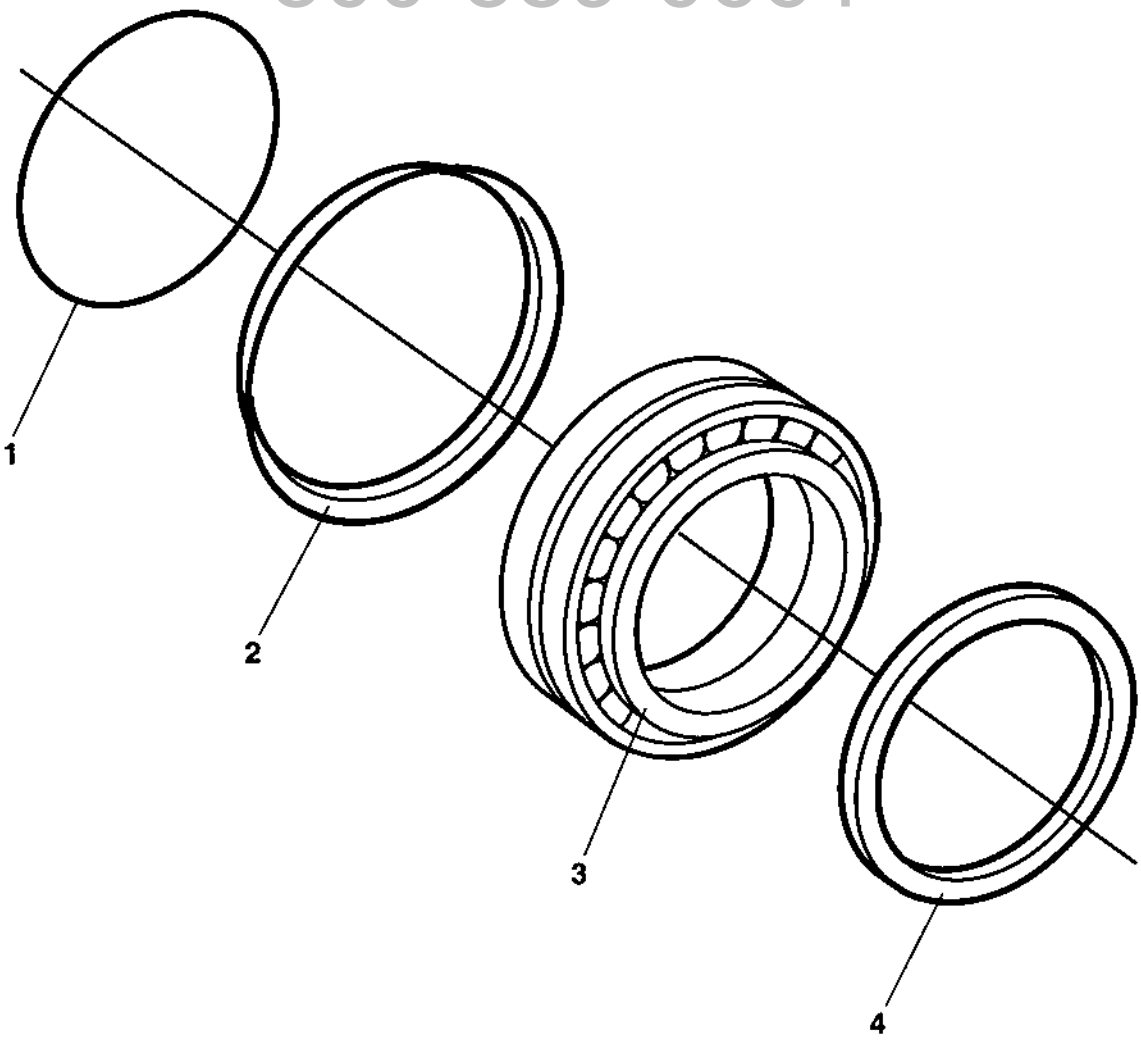

DynapacParts.com
800-889-0661

938891 Drum rotation kit

Ref. No.	Part No.	Rem.	Qty	Description	Code
	938891			Drum rotation kit (Page 20)	
1	160105		1	O-ring 70	D
2	929447		1	V-ring	D
3	116041		1	Taper roller bearing	D
4	386272		1	Sealing	D

DynapacParts.com
800-889-0661

DynapacParts.com
800-889-0661

938881 Shock absorber kit, drum

SHOCK ABSORB.

DynapacParts.com
800-889-0661

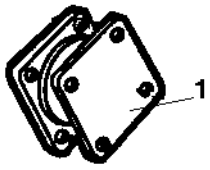

DynapacParts.com
800-889-0661

938881 Shock absorber kit, drum

Ref. No.	Part No.	Rem.	Qty	Description	Code
	938881			Shock absorber kit, drum (Page 22)	
1	801187		14	Shock absorber	B

DynapacParts.com
800-889-0661

DynapacParts.com
800-889-0661

DynapacParts.com
800-889-0661

DynapacParts.com
800-889-0661

Frame

Ref. No.	Part No.	Rem.	Qty	Description	Code
10				Frames (Page 26)	
30				Scrapers and beam Up to 68X10453 (Page 28)	
35				Scrapers and beam From 68X10454 (Page 30)	
70				Hitch (Page 32)	
90				Structure (Page 34)	
100				Hood latch control (Page 38)	Option
120				Noise suppression, air inlet (Page 40)	Option
130				Drum shroud From 68X10454 (Page 42)	Option

DynapacParts.com
800-889-0661

DynapacParts.com
800-889-0661

Frames

16085-1

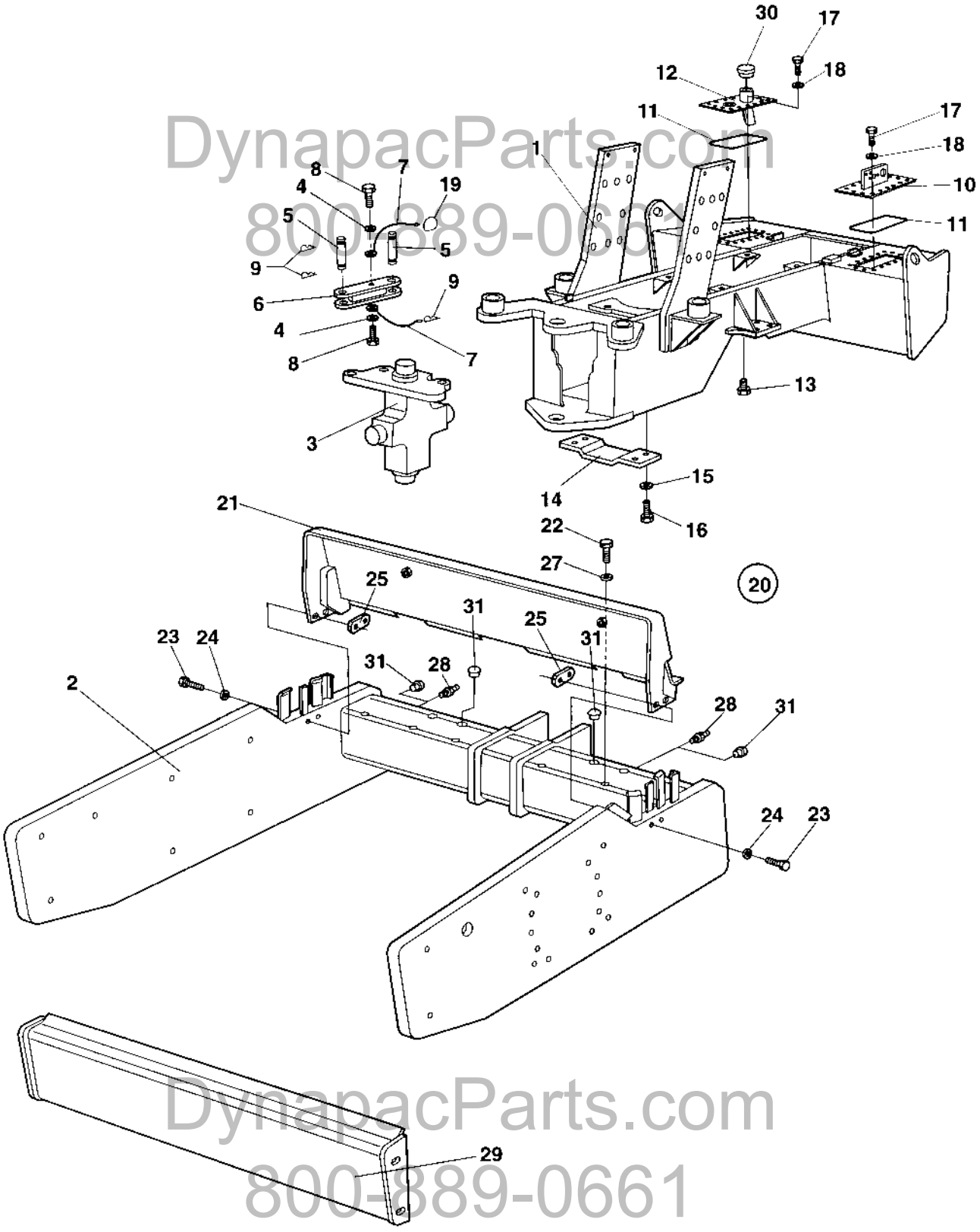

DynapacParts.com
800-889-0661
DynapacParts.com
800-889-0661

Frames

Ref. No.	Part No.	Rem.	Qty	Description		Code
1	386835		1	Tractor frame		
2	383440		1	Drum frame Up to 68X10453		
	376700		1	Drum frame From 68X10454		
3			1	Hitch (Page 32)		
4	904230		2	Washer		
5	347119		2	Shaft		D
6	374744		1	Safety rod		
7	343775		2	Wire		
8	500043		2	Screw		
9	635061		3	Hair clip		D
10	386871		1	Cover		
11	372709		2	O-ring		D
12	388186		1	Cover		
13	813391		1	Magnetic plug		D
14	372087		1	Protective plate		
15	904557		4	Washer		
16	500029		4	Screw		
17	500188		32	Screw	M8-1,25x14 8,8	
18	904229		32	Washer		
19	357488		1	Spring		
20			1	Drum shroud, cpl	Option	
21	372844	A	1	.Drum shroud Up to 68X10453		
22	500029		4	.Screw		
23	500033		4	.Screw	M10-1,5x60 8,8	
24	904230		4	.Washer		
25	376045		2	.Holder		
27	904557		4	.Washer		
28				Not used on this model		
29			1	Scraper beam		
30	373460		1	Fuel cap		D
31	902919		8	Plug		

A) For new Drum shroud see section "Drum shroud Option".

DynapacParts.com
800-889-0661

DynapacParts.com
800-889-0661

DynapacParts.com
800-889-0661

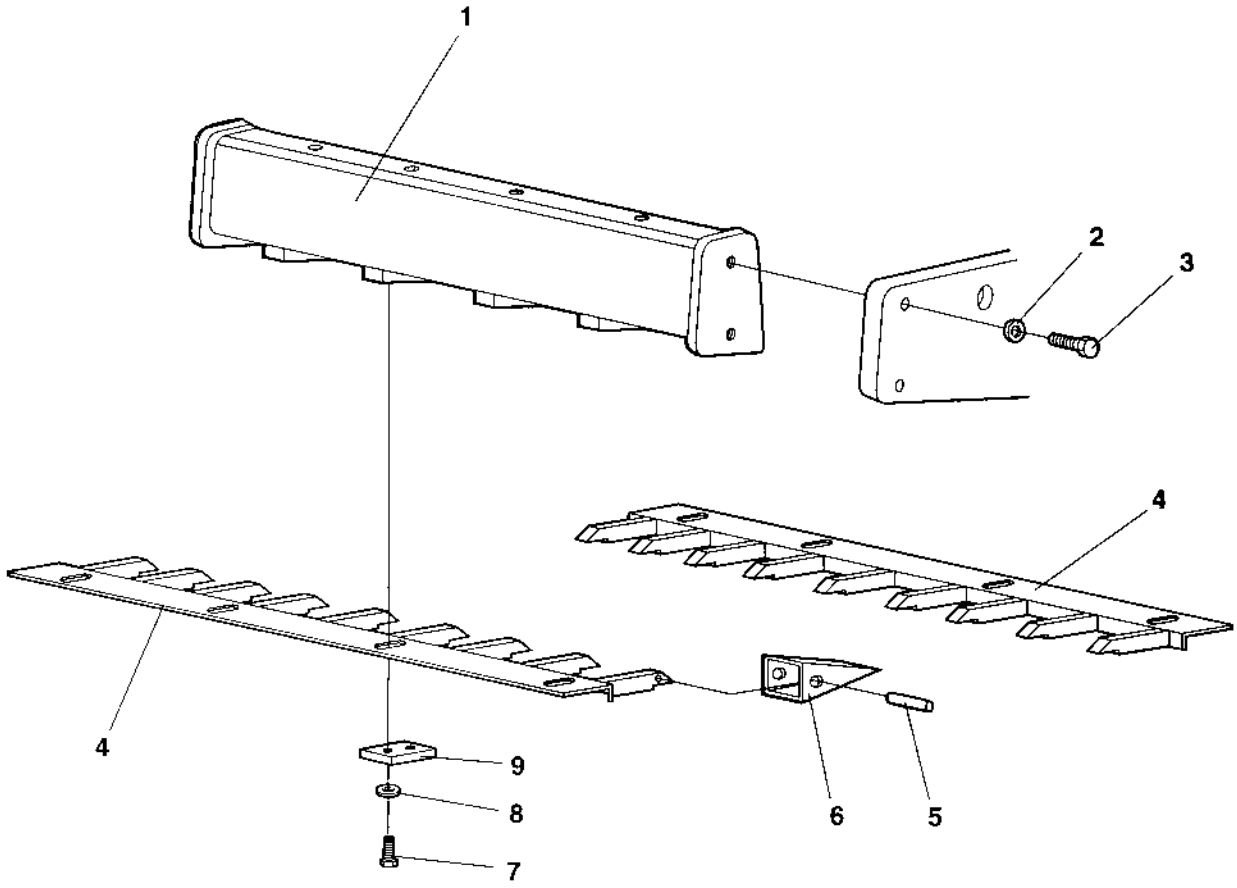

DynapacParts.com
800-889-0661

Scrapers and beam

Ref. No.	Part No.	Rem.	Qty	Description		Code
1	382259		1	Cross beam		
2	904234		4	Washer		
3	500147		4	Screw	M24x130	
4	344962		2	Scraper		
5	801631		18	Flexible pin	56,5x40	B
6	383844		18	Tooth		B
7	500102		16	Screw	M16x45	
8	615046		16	Conical spring washer	17x39	
9	355639		8	Bracket		

DynapacParts.com
800-889-0661

DynapacParts.com
800-889-0661

Scrapers and beam

17982-1

DynapacParts.com
800-889-0661

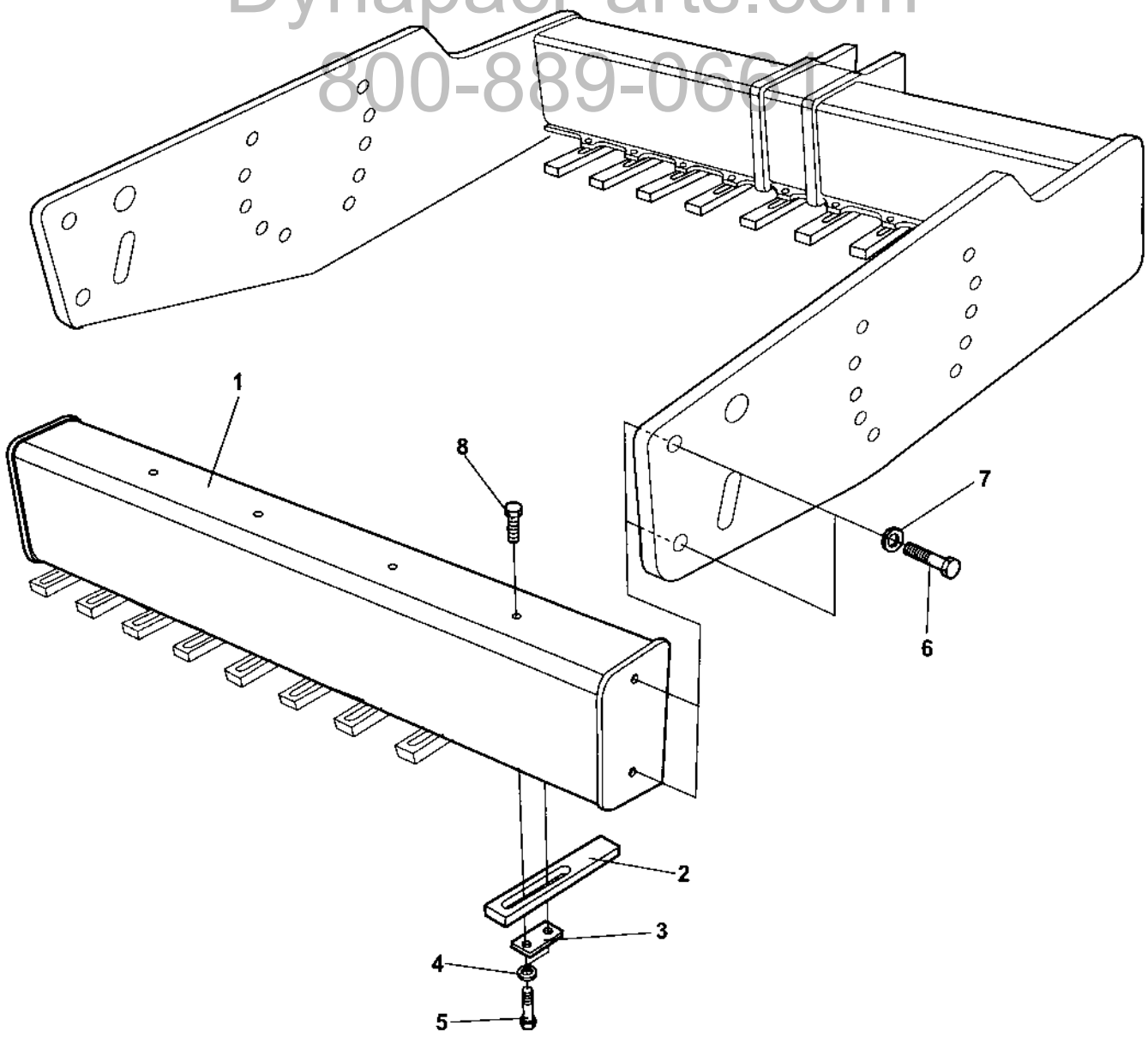

DynapacParts.com
800-889-0661

Scrapers and beam

Ref. No.	Part No.	Rem.	Qty	Description	Code
1	389907		1	Cross beam	
2	376551		18	Scraper tooth	
3	376622		18	Holder	
4	904232		36	Washer	
5	500165		36	Screw	M16-2,0x75 8,8
6	500147		4	Screw	M24x130
7	904234		4	Washer	
8	500154		4	Screw	M16-2,0x25 8,8

DynapacParts.com
800-889-0661

DynapacParts.com
800-889-0661

Hitch

16083

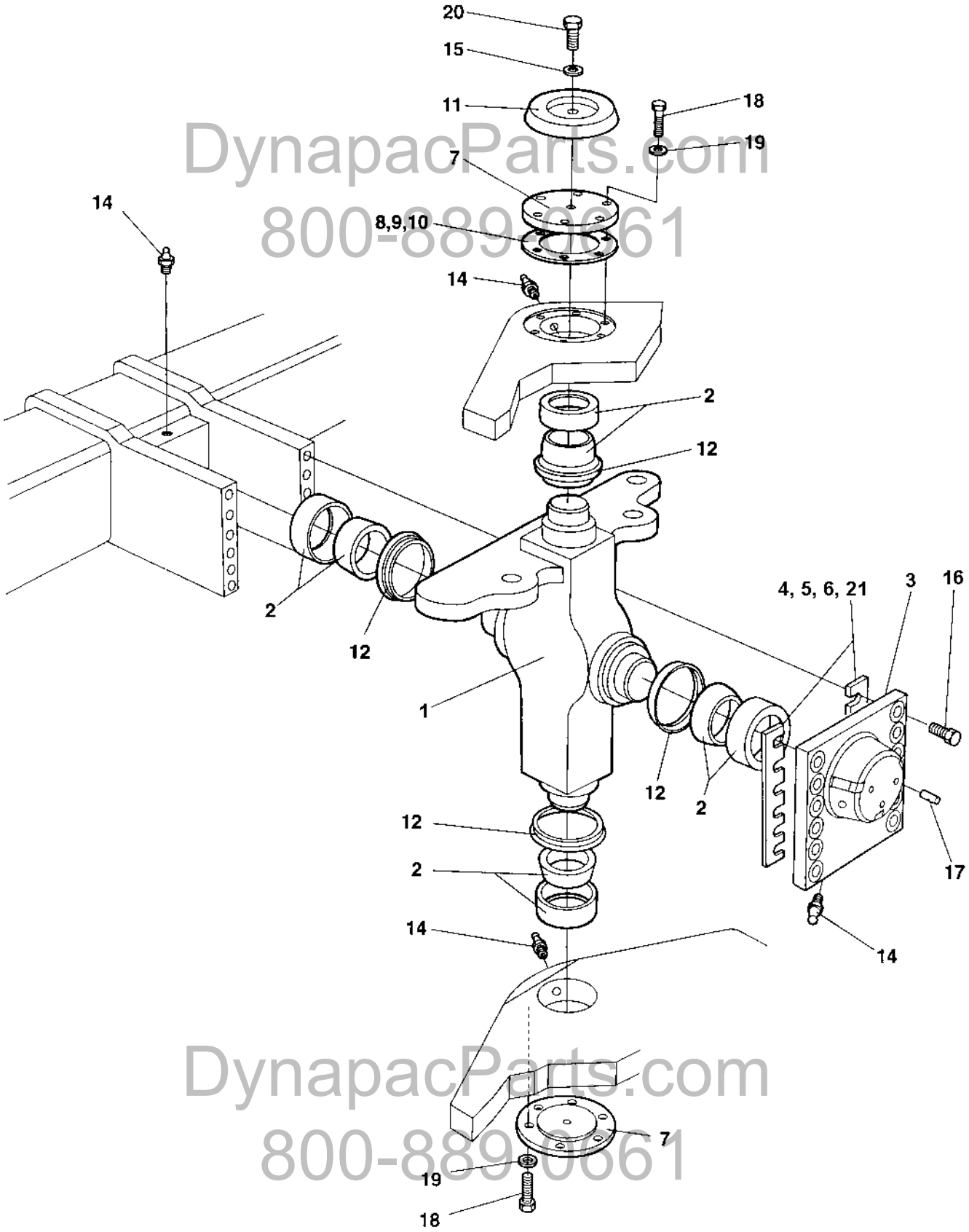

DynapacParts.com
800-889-6661
DynapacParts.com
800-889-6661

Hitch

Ref. No.	Part No.	Rem.	Qty	Description		Code
1	374900		1	Hitch		
2	100040		4	Axial ball bearing		D
3	373421		1	Bearing cover		
4	345871	N		Shim	T=1,0 mm	D
5	345872	N		Shim	T=0,35 mm	D
6	345873	N		Shim	T=0,10 mm	D
7	337042		2	Bearing cover		
8	337045	N		Shim	T=1,0 mm	D
9	345874	N		Shim	T=0,35 mm	D
10	345875	N		Shim	T=0,10 mm	D
11	343159		1	Cover		
12	167032		4	Lip-type oil seal		D
14	926214		4	Grease fitting		D
15	904229		1	Washer		
16	500287		12	Screw		
17	910995		3	Stop screw		
18	500037		12	Screw		
19	904231		12	Washer		
20	500018		1	Screw	M8-1,25x12 8,8	
21	380993	N		Shim	T = 2,0 mm	D
	384498	N		Shim	T = 0,15 mm	D

DynapacParts.com
800-889-0661

DynapacParts.com
800-889-0661

Structure

17057-2

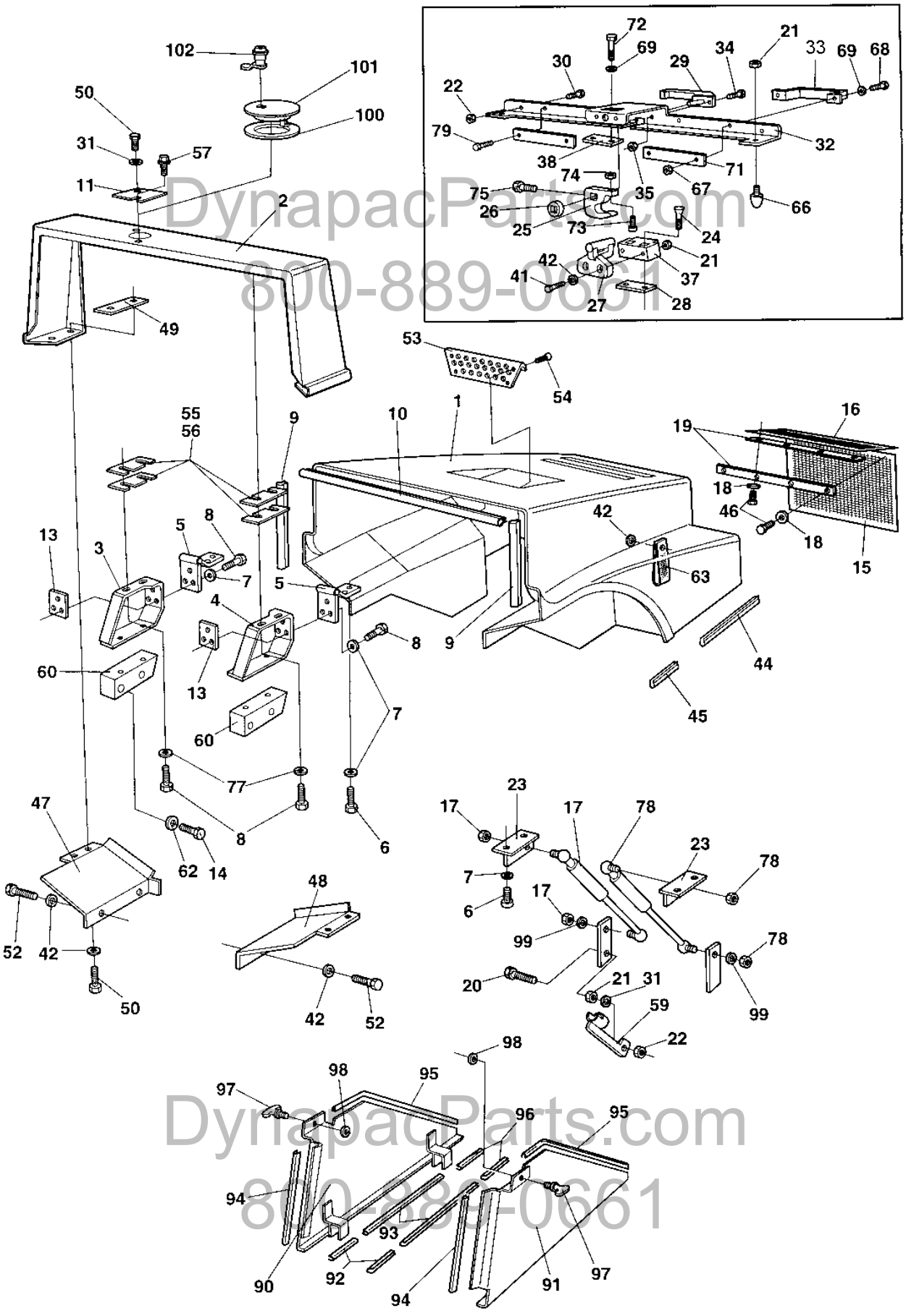

DynapacParts.com
800-889-0661

Structure

Ref. No.	Part No.	Rem.	Qty	Description		Code
1	372066		1	Hood		
2	387176		1	Protective hood		
3	374797	A	1	Clamp		
4	374798	B	1	Clamp		
5	371366		2	Hinge		D
6	500028		10	Screw		
7	904557		16	Washer		
8	500030		10	Screw		
9	902166	C	2XL	Edge trim		
10	902166	D	1XL	Edge trim		
11	373955		2	Cover		
13	374799		2	Holder plate		
14	500133		4	Screw		
15	374017		1	Grid		
16	372695		1	Grid		
17	382384	I	1	Gas spring		D
	382387	R	1	Gas spring		
18	927974		19	Washer	5x19x1	
19	202047	E	NXL	Rubber strip		
20	904241		1	Screw	M8x40	
21	570005		5	Nut		
22	902286		3	Lock nut		
23	372608		2	Bracket		
24	903732		2	Screw		
25	382130		1	Hook		
26	382335		1	Spacer sleeve		
27	382131		1	Lock clamp		
28	380109		1	Holder		
29	382165		1	Locking handle		
	902866		1	.Key	Marked "455"	D
30	927637		2	Screw	M8x35	
31	904556		4	Washer		
32	382129		1	Holder plate		
33	904874		1	Grab handle		D
34	535011		2	Screw		
35	902284		2	Nut	M5	
37	382132		1	Holder		
38	382336		1	Holder		
41	500026		2	Screw	M8-1,25x60 8,8	
42	904640		11	Washer		
44	902166	G	1XL	Edge trim		
45	902166	H	1XL	Edge trim		
46	904244		17	Screw		
47	373204	I	1	Holder plate		

A) Right
B) Left
C) L = 0.940 m
D) L = 0.630 m
E) Total length = 4.170 m
G) L = 0.280 m
H) L = 0.170 m
I) Right side
R) With noise suppression mounted, Option

DynapacParts.com
800-889-0661
DynapacParts.com
800-889-0661

Structure

17057-2

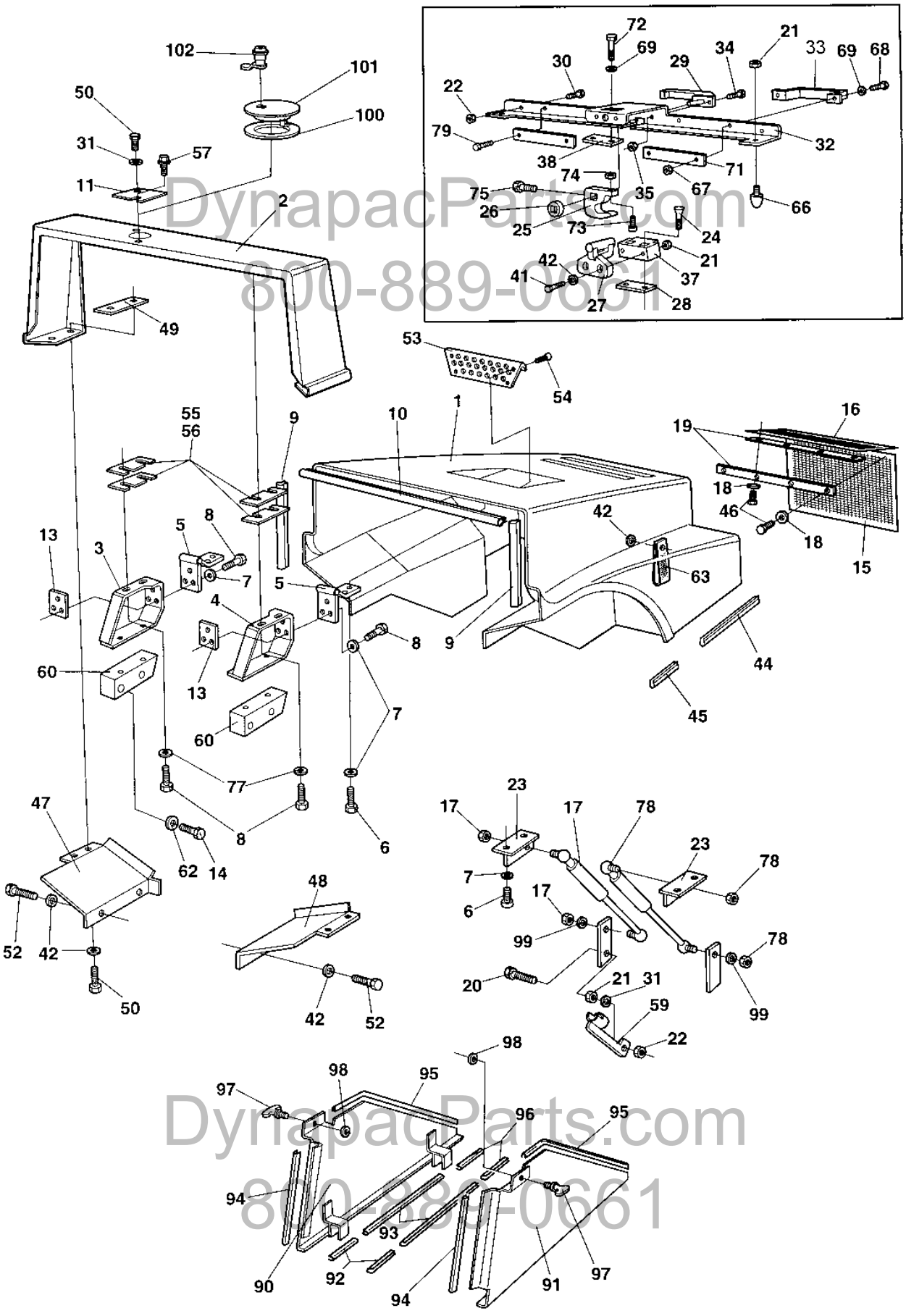

DynapacParts.com
800-889-0661

Structure

Ref. No.	Part No.	Rem.	Qty	Description		Code
48	373203	J	1	Holder plate		
49	373309		2	Holder plate		
50	500021		6	Screw		
52	500019		4	Screw		
53	372575		1	Grid		
54	901767		4	Screw	ST3,5x9,5 Black	
55	373956		N	Shim		
56	373957		N	Shim		
57	500505		2	Screw	M8x20 8.8	
59	382382		1	Safety rod		
60	381989		2	Holder		
62	904231		4	Washer		
63	374854		1	Grab handle		
66	925629		2	Shock absorber		
67	902285		2	Lock nut		
68	500088		2	Screw	M6x40	
69	904228		4	Washer		
71	382355		2	Holder plate		
72	500013		2	Screw		
73	500040		1	Screw		
74	570004		1	Nut	M6	
75	500018		1	Screw	M8-1,25x12 8,8	
77	904567		4	Washer	10,5x28x6 HB305	
78	382384	J	1	Gas spring		D
	382387	R	1	Gas spring		
79	541507		2	Screw		
90	373197	K	1	Cover, right		
91	373196	K	1	Cover, left		
92	202056	L	2XL	.Edge trim		
93	202056	M	2XL	.Edge trim		
94	202056	N	2XL	.Edge trim		
95	904076	O	2XL	.Edge trim		
96	202056	P	2XL	.Edge trim		
97	904075		2	Quick lock		
98	926985		2	Quick lock washer		
99	904230		2	Washer		
100	375681	K	1	Gasket		
101	375678	K	1	Cover		
102	372658	K	1	Lock		
	902866		1	.Key	Marked "455"	D

J) Left side
K) Option
L) L = 0.140 m
M) L = 0.660 m
N) L = 0.320 m
O) L = 0.970 m
P) L = 0.220 m
R) With noise suppression mounted, Option

DynapacParts.com
800-889-0661

DynapacParts.com
800-889-0661

Hood latch control Option

17108

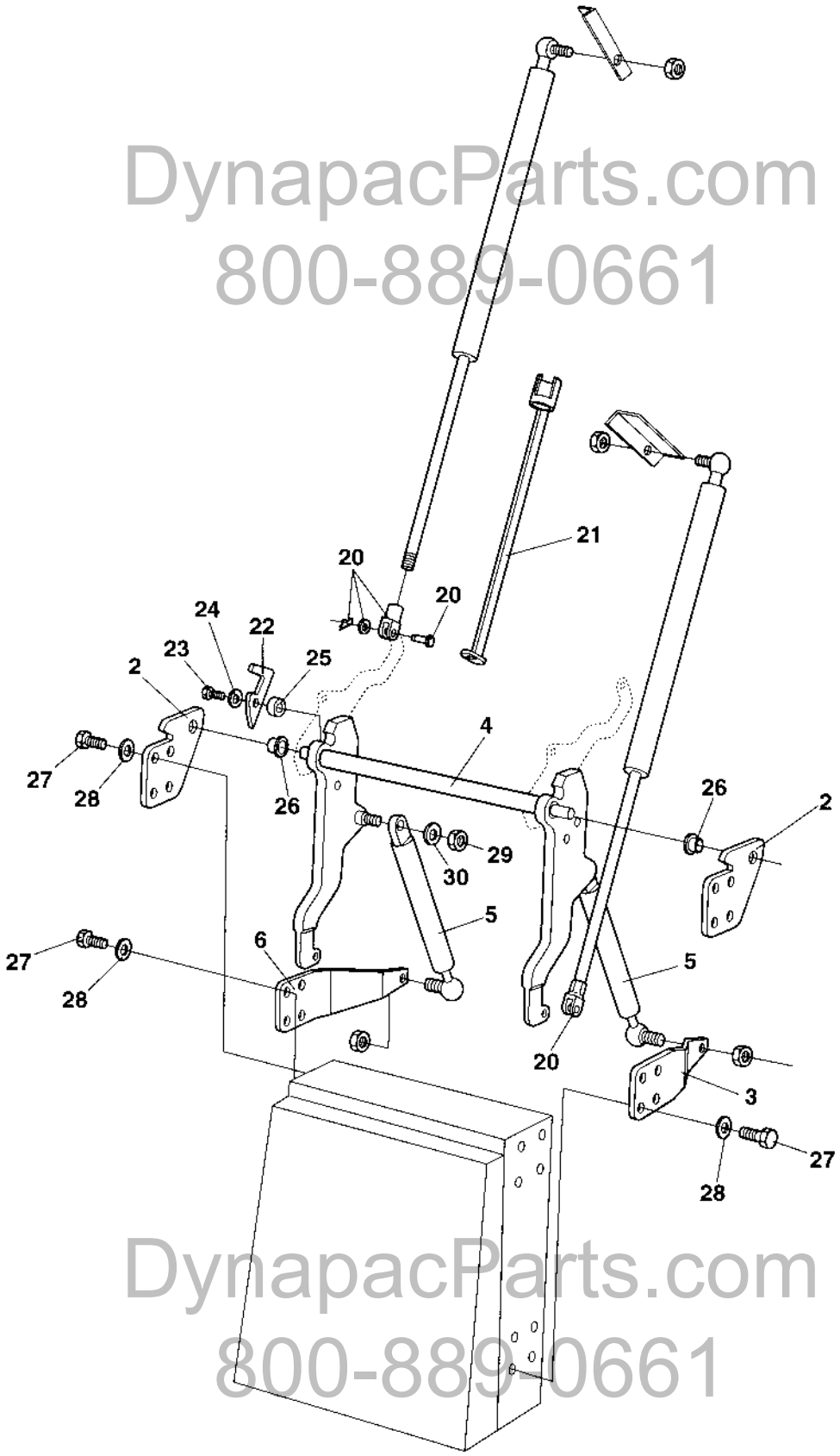

DynapacParts.com
800-889-0661
DynapacParts.com
800-889-0661

Hood latch control Option

Ref. No.	Part No.	Rem.	Qty	Description	Code
2	374592		2	Holder	
3	374589		1	Lever, right	
4	374585		1	Lever	
5	904409		2	Gas spring	
6	374590		1	Lever, left	
20	416404		2	Yoke	
21	382558		1	Safety rod	
22	374591		1	Lock	
23	500029		1	Screw	
24	904230		1	Washer	
25	371767		1	Spacer	
26	904407		2	Flange bearing	
27	500022		16	Screw	
28	904229		16	Washer	
29	904563		2	Lock nut	M6
30	904228		2	Washer	

DynapacParts.com
800-889-0661

DynapacParts.com
800-889-0661

Noise suppression, air inlet Option

17654

DynapacParts.com
800-889-0661

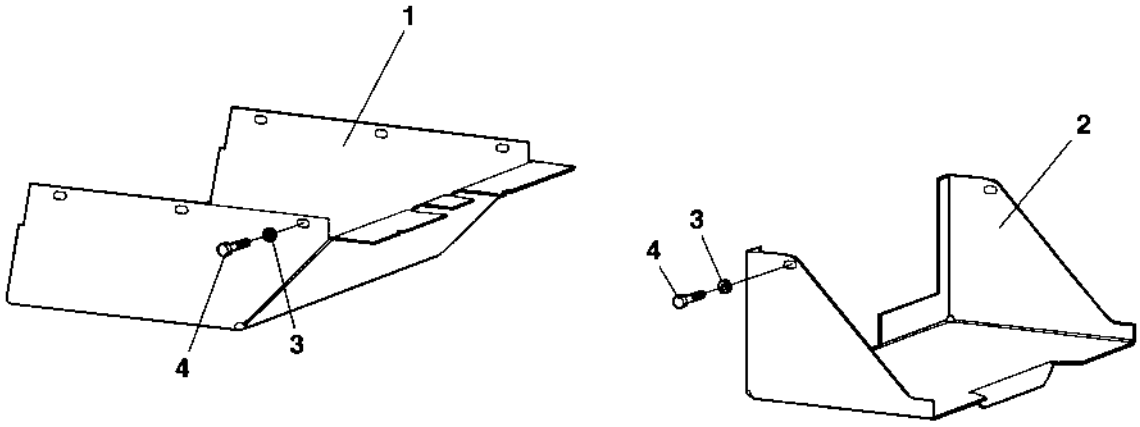

DynapacParts.com
800-889-0661

Noise suppression, air inlet Option

Ref. No.	Part No.	Rem.	Qty	Description	Code
1	374583		1	Air inlet plate	
2	374567		1	Air inlet plate	
3	904640		8	Washer	
4	500053		8	Screw	

DynapacParts.com
800-889-0661

DynapacParts.com
800-889-0661

Drum shroud Option

18169

DynapacParts.com
800-889-0661

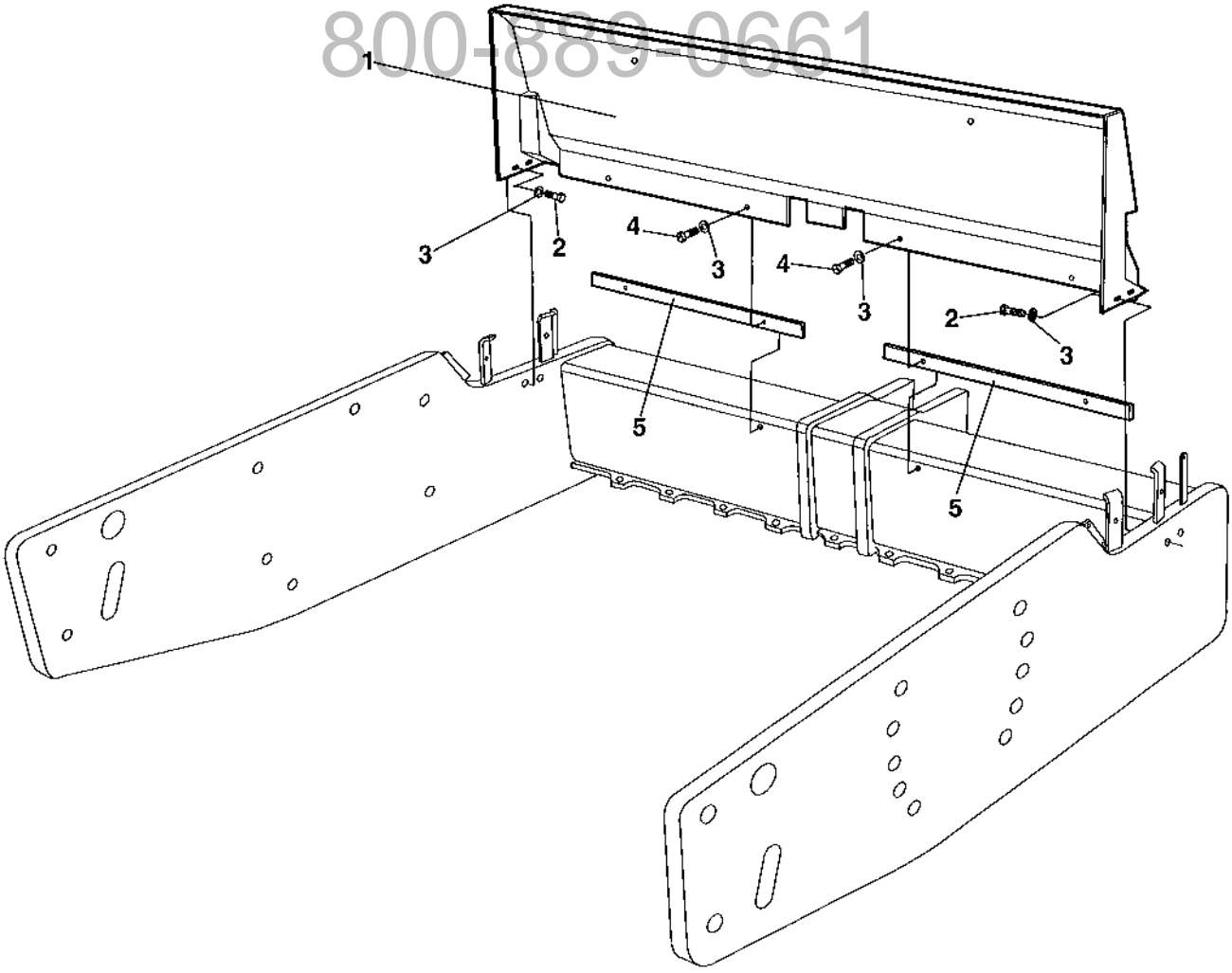

DynapacParts.com
800-889-0661

Drum shroud Option

Ref. No.	Part No.	Rem.	Qty	Description	Code
1	376945		1	Drum shroud	
2	500029		4	Screw	
3	904567		8	Washer	10,5x28x6 HB305
4	500240		4	Screw	M10x40H 8,8
5	376944		2	Spacer	

DynapacParts.com
800-889-0661

DynapacParts.com
800-889-0661

DynapacParts.com
800-889-0661

DynapacParts.com
800-889-0661

Drum

Ref. No.	Part No.	Rem.	Qty	Description		Code
10				Drum (Page 46)		
30				Drum cartridge Up to 68X10970 (Page 48)	Vibration side	
31				Drum cartridge From 68X10971 (Page 50)	Vibration side	
40				Drum cartridge Up to 68X10970 (Page 52)	Drive side	
41				Drum cartridge From 68X10971 (Page 54)	Drive side	
50	372987			Drum gear (Page 56)		C

DynapacParts.com
800-889-0661

DynapacParts.com
800-889-0661

Drum

16118

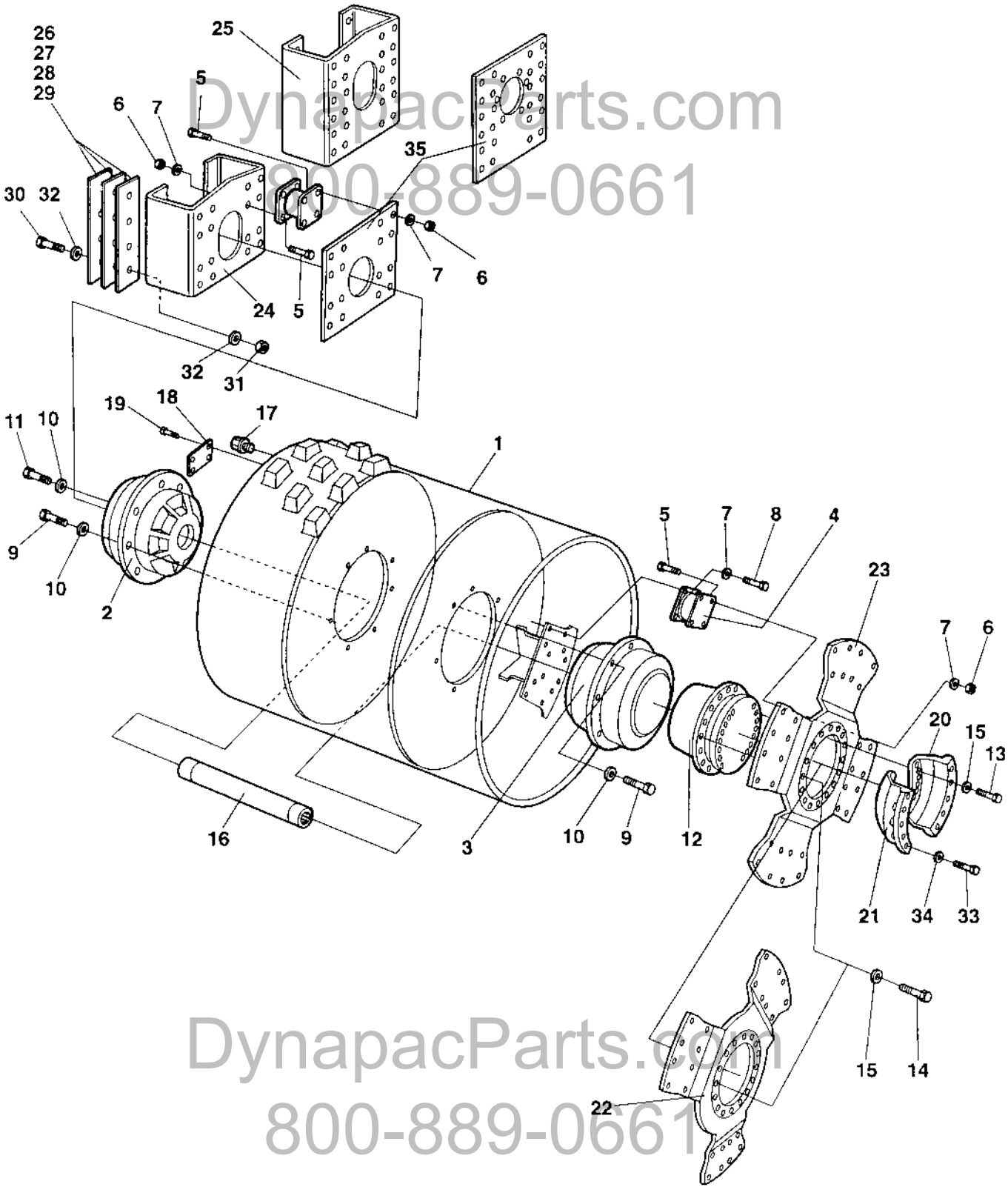

DynapacParts.com
800-889-0661
DynapacParts.com
800-889-0661

Drum

Ref. No.	Part No.	Rem.	Qty	Description		Code
1	372889		1	Drum		
2				Drum cartridge Up to 68X10970 (Page 48)	Vibration side	
				Drum cartridge From 68X10971 (Page 50)	Vibration side	
3				Drum cartridge Up to 68X10970 (Page 52)	Drive side	
				Drum cartridge From 68X10971 (Page 54)	Drive side	
4	801187		14	Shock absorber		B
5	500194		80	Screw		
6	570007		80	Hexagon nut	M12	
7	904231		112	Washer		
8	500051		32	Screw		
9	500082		23	Screw	M16x70	
10	384114		24	Spacer Up to 68X10970		
	904232		24	Washer From 68X10971		
11	384121		1	Air breather screw		B
12	372987		1	Drum gear (Page 56)		C
	371511		1	Drum gear, dual speed	Option	
13	903919		16	Screw		
14	903281		16	Screw		
15	904233		32	Washer		
16	349682		1	Drive shaft		
17	232210		1	Plug		
18	343801		1	Sign plate		
19	527002		4	Drive screw		
20	373442	A	1	Gear holder		
21	373443	B	1	Gear holder		
22				Not used on this model		
23	372230		1	Drive disc		
24				Not used on this model		
25	355677		1	Bracket		
26	345678		N	Shim	T = 1,5 mm	
27	345679		N	Shim	T = 3 mm	
28	345884		N	Shim	T = 6 mm	
29	345885		N	Shim	T = 8 mm	
30	928850		6	Screw	M20-2,5x120 10,9	
31	901145		6	Lock nut	M20-10	
32	904233		12	Washer		
33	500146		10	Screw	M24-3,0x110 8,8	
34	904234		10	Washer		
35	343480		1	Holder plate		

A) Right
B) Left

DynapacParts.com
800-889-0661

DynapacParts.com
800-889-0661

Drum cartridge Vibration side

16961

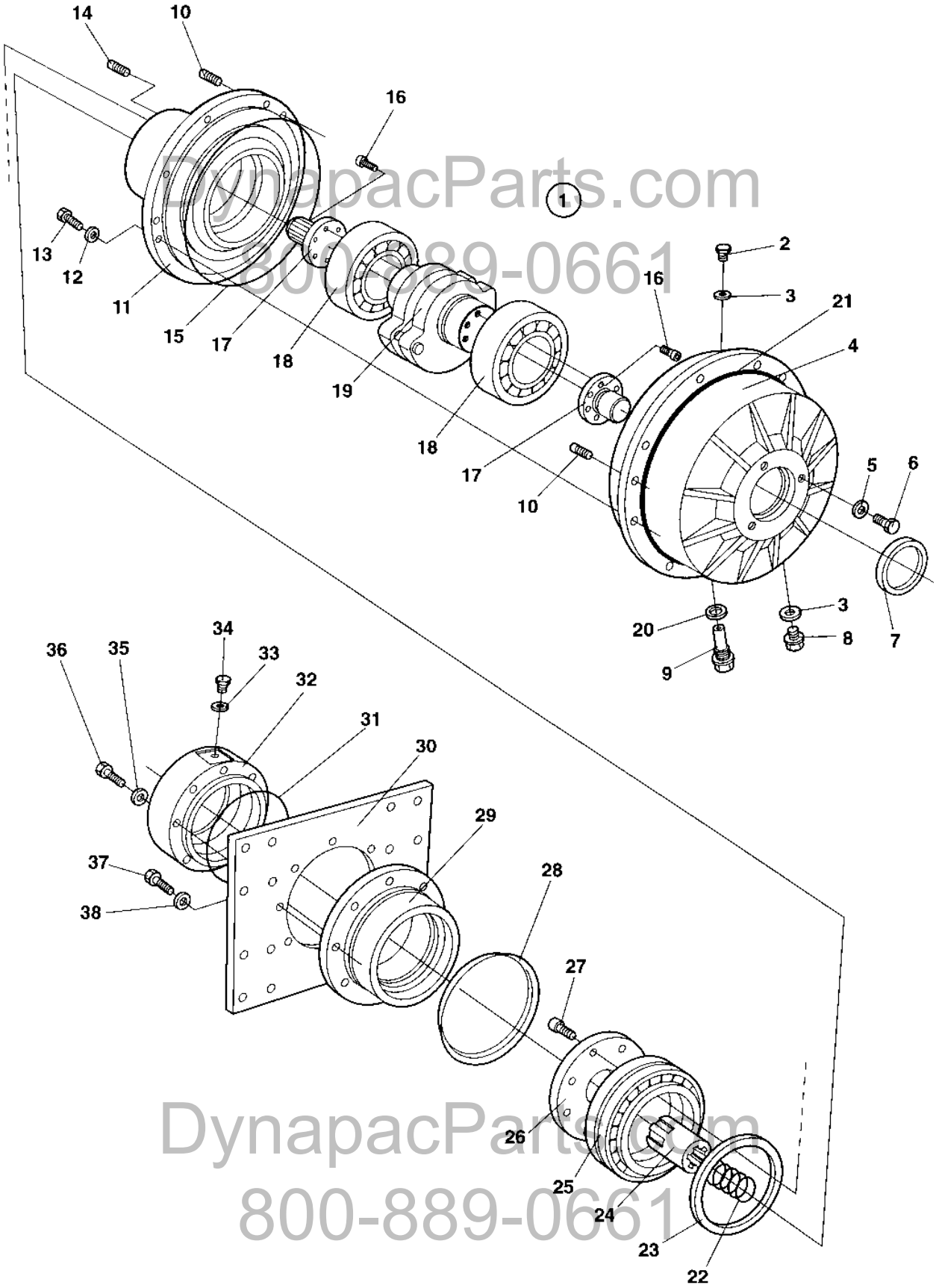

DynapacParts.com
800-889-0661
DynapacParts.com
800-889-0661

Drum cartridge Vibration side

Ref. No.	Part No.	Rem.	Qty	Description		Code
1	937627		1	Drum cartridge		
2	343744		1	.Magnetic plug		D
3	162017		2	.Seal ring		D
4	384382		1	.Bearing housing inner		
5	162027		3	.Sealing		D
6	500163		3	.Screw	M12x16	
7	900782		1	.Seal ring		D
8	232210		1	.Plug		
9	381634		1	.Plug		
10	900775		6	.Plug		
11	356029		1	.Bearing housing outer		
12	904232		12	.Washer		
13	500082		12	.Screw	M16x70	
14	901828		6	.Set screw		
15	900776		1	.O-ring		D
16	791156		16	.Screw	M10-1,5x55 12,9	
17	380018		2	.Splined shaft		
18	900784		2	.Cylinder roller bearing		
19	381760		1	.Eccentric shaft		
20	162011		1	.Washer, sealing		D
21	904737		1	O-ring		
22	349715		1	Spring		
23	167023		1	Seal ring		D
24	381027		1	Splined sleeve		
25	116041		1	Taper roller bearing		D
26	381028		1	Bearing cover		
27	791933		8	Screw	M8x40	
28	929447		1	V-ring		D
29	343318		1	Bearing housing		D
30	343322		1	Holder plate		
31	160105		1	O-ring 70		D
32	380967		1	Motor adapter		
33	162018		1	Sealing		D
34	370231		1	Plug		
35	904231		4	Washer		
36	500196		4	Screw From 1	M12-1,75x80 8.8	
37	500082		8	Screw	M16x70	
38	384114		8	Spacer		

DynapacParts.com
800-889-0661

DynapacParts.com
800-889-0661

Drum cartridge Vibration side

18388-1

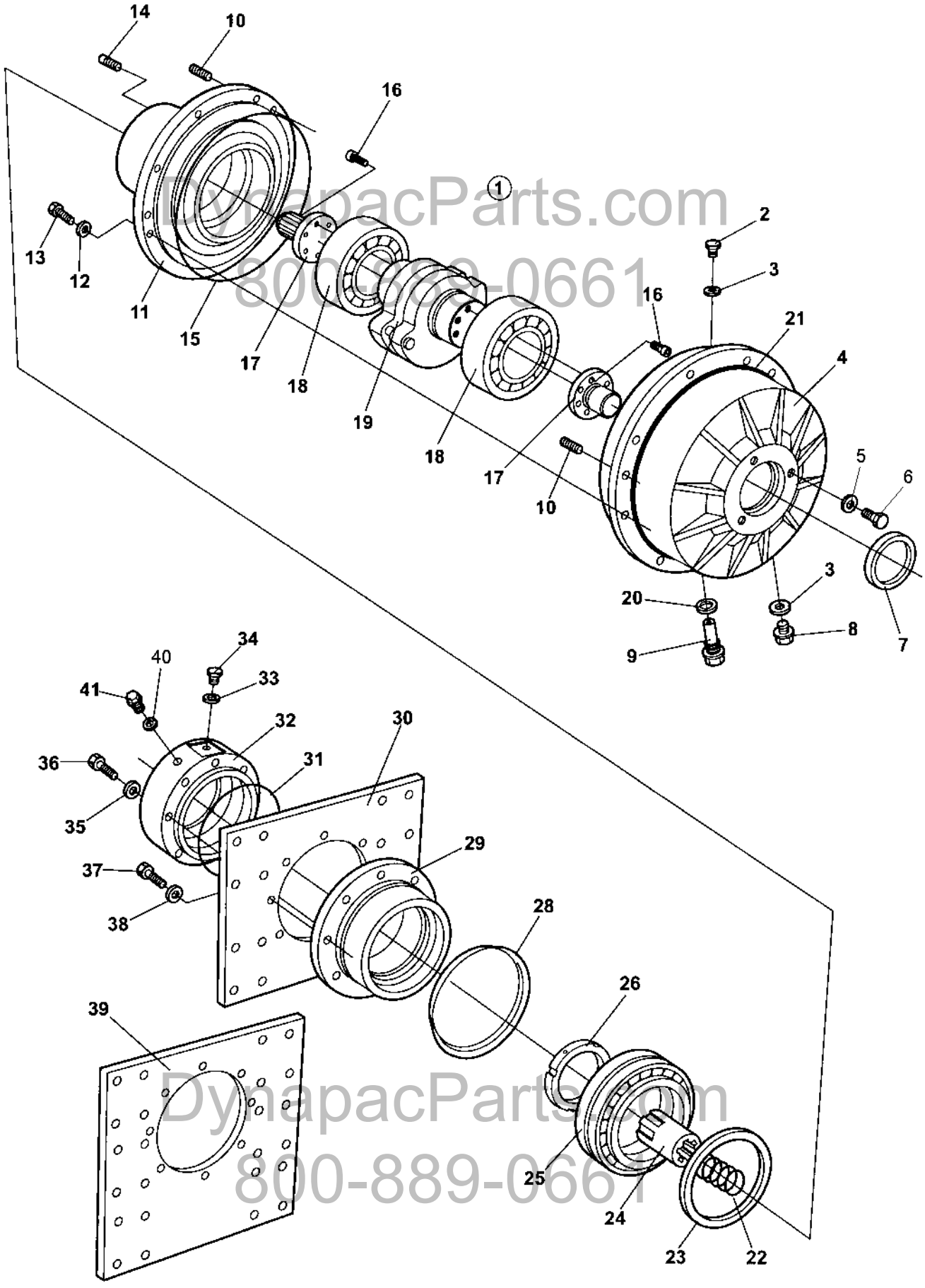

DynapacParts.com
800-889-0661

Drum cartridge Vibration side

Ref. No.	Part No.	Rem.	Qty	Description		Code
1	945591		1	Drum cartridge		
2	343744		1	.Magnetic plug		D
3	162017		2	.Seal ring		D
4	379880		1	.Bearing housing inner		
5	162027		3	.Sealing		D
6	500163		3	.Screw	M12x16	
7	900782		1	.Seal ring		D
8	232210		1	.Plug		
9	381634		1	.Plug		
10	900775		6	.Plug		
11	379878		1	.Bearing housing outer		
12	904232		12	.Washer		
13	500082		12	.Screw	M16x70	
14	903189		3	.Stop screw		
15	900776		1	.O-ring		D
16	791156		16	.Screw	M10-1,5x55 12,9	
17	380018		2	.Splined shaft		
18	390896		2	.Spherical roller bearing		D
19	381760		1	.Eccentric shaft		
20	162011		1	.Washer, sealing		D
21	904737		1	O-ring		
22	349715		1	Spring		
23	167023		1	Seal ring		D
24	381027		1	Splined sleeve		
25	116041		1	Taper roller bearing		D
26	390897		1	Shaft nut		
28	929447		1	V-ring		D
29	343318		1	Bearing housing		D
30			1	Not used on this model		D
31	160105		1	O-ring 70		D
32	390771		1	Motor adapter		
33	162018		1	Sealing		D
34	370231		1	Plug		
35	904231		4	Washer		
36	500196		4	Screw	M12-1,75x80 8.8	
37	500082		8	Screw	M16x70	
38	384114		8	Spacer		
39	343480		1	Holder plate		
40	162024		1	Washer, sealing		
41	903190		1	Steel plug		

DynapacParts.com
800-889-0661

DynapacParts.com
800-889-0661

Drum cartridge Drive side

16963

DynapacParts.com
800-889-0661

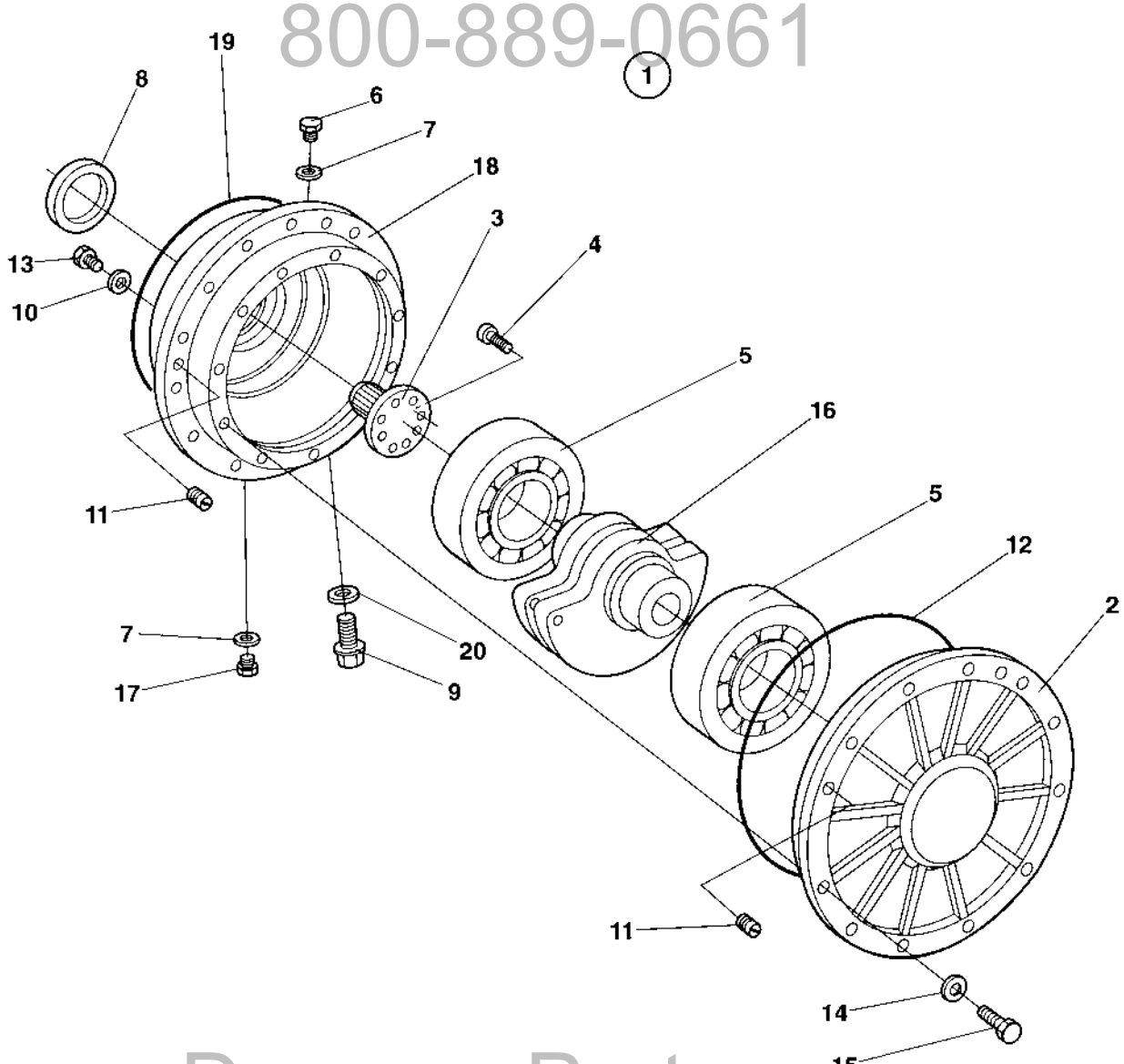

DynapacParts.com
800-889-0661

Drum cartridge Drive side

Ref. No.	Part No.	Rem.	Qty	Description		Code
1	937626		1	Drum cartridge		
2	356028		1	.Bearing housing outer		
3	380018		1	.Splined shaft		
4	791156		8	.Screw	M10-1,5x55 12,9	
5	900784		2	.Cylinder roller bearing		
6	343744		1	.Magnetic plug		D
7	162017		2	.Seal ring		D
8	900782		1	.Seal ring		D
9	381634		1	.Plug		
10	162027		3	.Sealing		D
11	900775		6	.Plug		
12	900776		1	.O-ring		D
13	500163		3	.Screw	M12x16	
14	904232		12	.Washer		
15	500082		12	.Screw	M16x70	
16	381760		1	.Eccentric shaft		
17	232210		1	.Plug		
18	384382		1	.Bearing housing inner		
19	904737		1	.O-ring		
20	162011		1	.Washer, sealing		D

DynapacParts.com
800-889-0661

DynapacParts.com
800-889-0661

Drum cartridge Drive side

16963

DynapacParts.com
800-889-0661

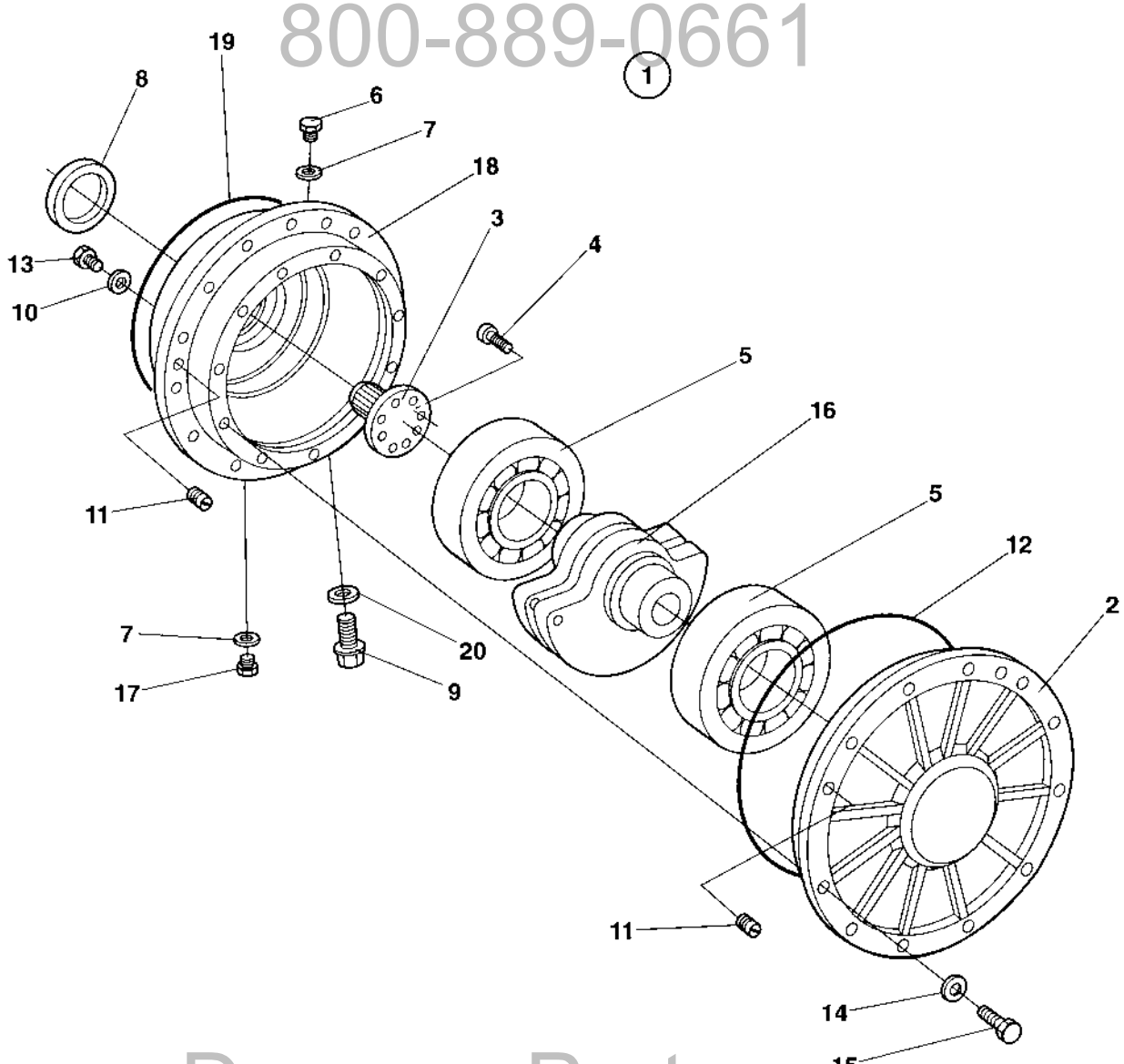

DynapacParts.com
800-889-0661

Drum cartridge Drive side

Ref. No.	Part No.	Rem.	Qty	Description		Code
1	945585		1	Drum cartridge		
2	379876		1	.Bearing housing outer		
3	380018		1	.Splined shaft		
4	791156		8	.Screw	M10-1,5x55 12,9	
5	390896		2	.Spherical roller bearing		D
6	343744		1	.Magnetic plug		D
7	162017		2	.Seal ring		D
8	900782		1	.Seal ring		D
9	381634		1	.Plug		
10	162027		3	.Sealing		D
11	900775		6	.Plug		
12	900776		1	.O-ring		D
13	500163		3	.Screw	M12x16	
14	904232		12	.Washer		
15	500082		12	.Screw	M16x70	
16	381760		1	.Eccentric shaft		
17	232210		1	.Plug		
18	379880		1	.Bearing housing inner		
19	904737		1	.O-ring		
20	162011		1	.Washer, sealing		D

DynapacParts.com
800-889-0661

DynapacParts.com
800-889-0661

372987 Drum gear

16115

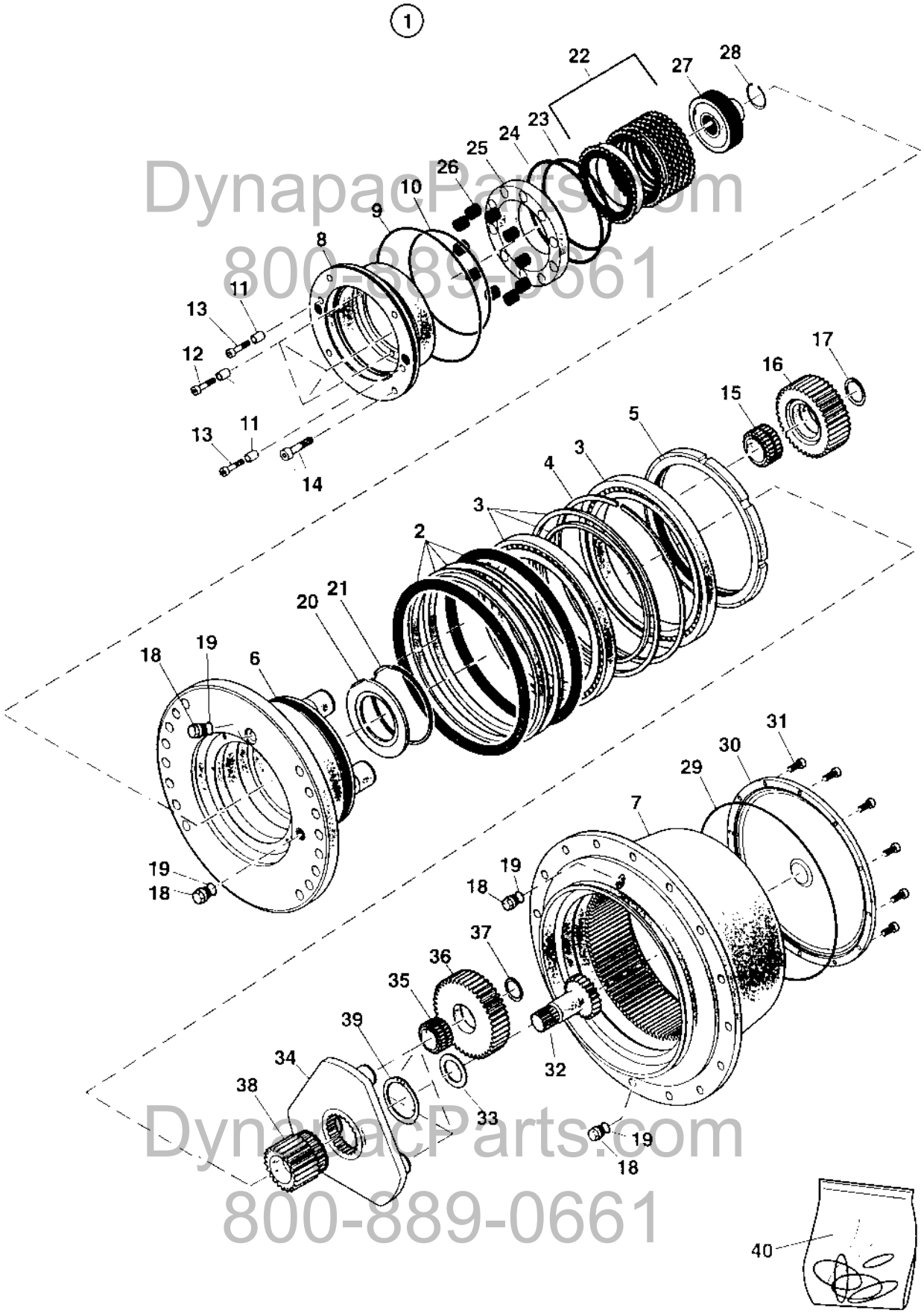

DynapacParts.com
800-889-0661

372987 Drum gear

Ref. No.	Part No.	Rem.	Qty	Description	Code
1			1	Drum gear, cpl	D
2	935859		1	.Seal	
3	935860		1	.Roller bearing	
4	935861		1	.Spring ring	
5	935862		1	.Nut	
6	935863		1	.Hub	
7	935864		1	.Hollow wheel	
8	935865		1	.Adapter	
9	935866	A	1	.O-ring	
10	935867	A	1	.O-ring	
11	935868		5	.Bushing	
12	935869		3	.Screw	
13	935870		2	.Screw	
14	935871		4	.Screw	
15	935872		4	.Roller bearing	
16	935873		4	.Planet gear	
17	935421		4	.Retaining ring	
18	935394		4	.Plug	
19	935395	A	4	.Seal ring	
20	935398		1	.Plate	
21	935399		1	.Spring ring	
22	935400		1	.Brake disc kit	
23	935401	A	1	.O-ring	
24	935402	A	1	.O-ring	
25	935403		1	.Piston	
26	935404		10	.Spring	
27	935874		1	.Coupling	
28	935875		1	.Retaining ring	
29	935413	A	1	.O-ring	
30	935414		1	.Cover	
31	935415		12	.Screw	
32	935876		1	.Sun wheel	
33	935877		1	.Spacer	
34	935878		1	.Planet carrier	
35	935879		3	.Roller bearing	
36	935880		3	.Planet gear	
37	935881		3	.Retaining ring	
38	935882		1	.Sun wheel	
39	935883		1	.Retaining ring	
40	935380		1	Seal kit	

A) Incl. in item 40

DynapacParts.com
800-889-0661

DynapacParts.com
800-889-0661

DynapacParts.com
800-889-0661

DynapacParts.com
800-889-0661

Engine

Ref. No.	Part No.	Rem.	Qty	Description	Code
10				Engine Up to 68X10468 (Page 60)	Deutz BF4M2012C
11				Engine From 68X10469 (Page 62)	Deutz BF4M2012C
20				Cooling system (Page 64)	
25				Cooling system (Page 68)	
30				Combustion air system Up to 68X10323 (Page 70)	
35				Combustion air system From 68X10324 (Page 72)	
40				Fuel system (Page 74)	
50				Exhaust system (Page 76)	
60				High mounted exhaust system (Page 78)	Option

DynapacParts.com
800-889-0661

DynapacParts.com
800-889-0661

Engine Deutz BF4M2012C

17749

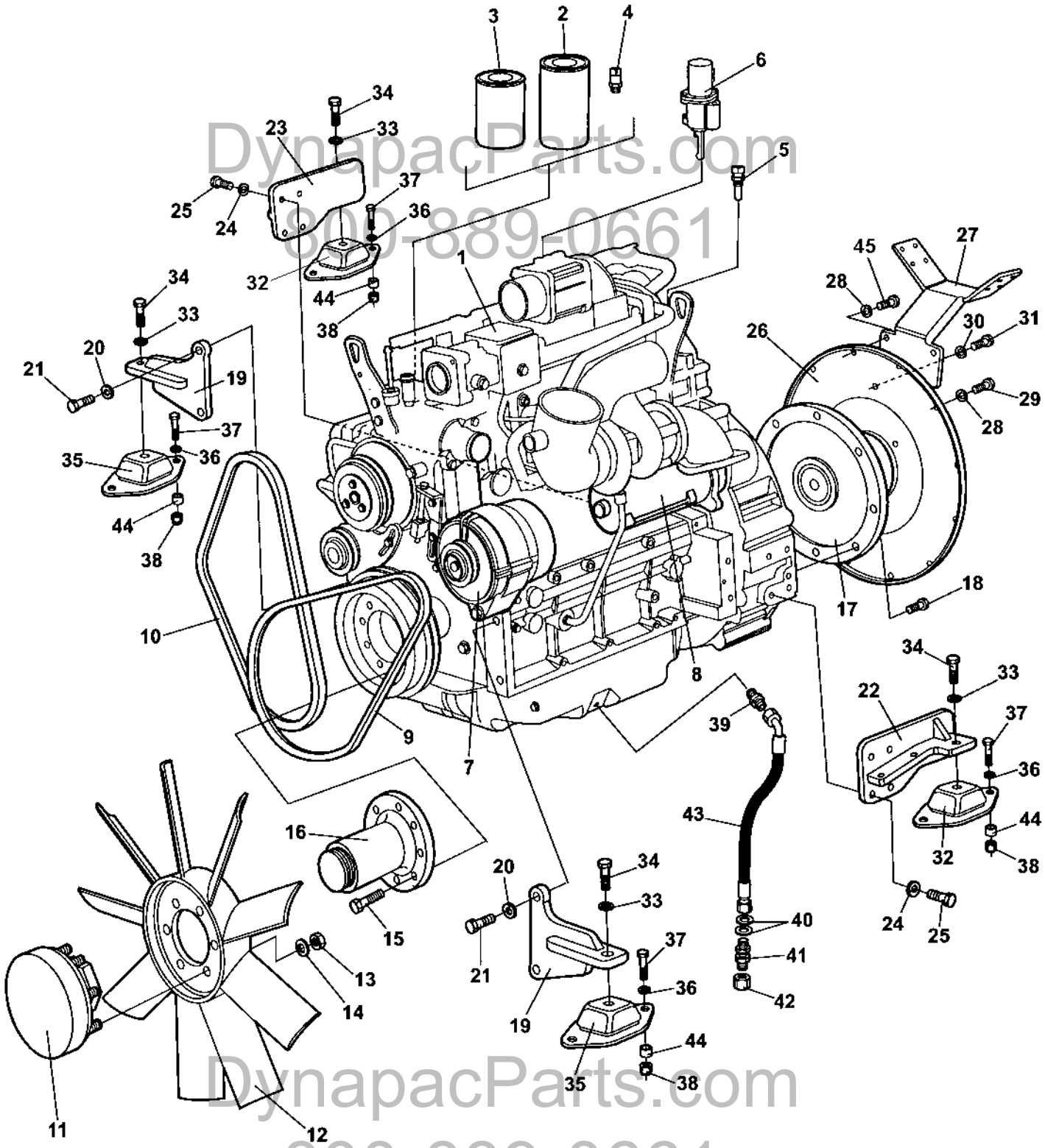

DynapacParts.com
800-889-0661

Engine Deutz BF4M2012C

Ref. No.	Part No.	Rem.	Qty	Description		Code
1	386926		1	Engine		
2	903942		1	.Oil filter element		A
3	939581		1	.Fuel filter element		A
4	939419		1	.Oil pressure sender		
5	939416		1	.Oil temp sender		
6	939415		1	.Fuel solenoid		D
7	939417		1	.Alternator		C
	939418		1	..Charging relay		
8	939431		1	.Starter		C
9	939420		1	.V-belt	Alternator	B
10	939421		1	.V-belt	Waterpump and Fan	B
11	939423		1	.Fan coupling		
12	939422		1	.Fan		
13	939424		6	.Nut		
14	939425		6	.Washer		
15	939427		9	.Bolt		
16	939426		1	.Fan adapter		
17	370229		1	Coupling, cpl		
18	508053		8	Screw		
19	387107		2	Engine bracket	Rear	
20	904232		4	Washer		
21	500093		4	Screw	M16x40	
22	387108		1	Engine bracket	Front, right side	
23	387109		1	Engine bracket	Front, left side	
24	904638		8	Washer	12x22x2	
25	500037		8	Screw		
26	372772		1	Bracket		
27	372358		1	Bracket		
28	904637		12	Washer		
29	500028		10	Screw		
30	904229		1	Washer		
31	500053		1	Screw		
32	387128		2	Shock absorber		
33	904232		4	Washer		
34	500070		4	Screw	M16x50	
35	387129		2	Shock absorber		D
36	904703		8	Washer		
37	500195		8	Screw		
38	586019		8	Lock nut		
39	234382		1	Adapter Up to 68X10371		
	904210		1	Adapter From 68X10372		
40	904234		2	Washer		
41	230516		1	Adapter		
42	230384		1	Cap		
43	387708		1	Oil drain hose Up to 68X10371		
	388779		1	Oil drain hose From 68X10372		
44	375152		8	Spacer		
45	500029		2	Screw		

DynapacParts.com
800-889-0661

DynapacParts.com
800-889-0661

Engine Deutz BF4M2012C

18133

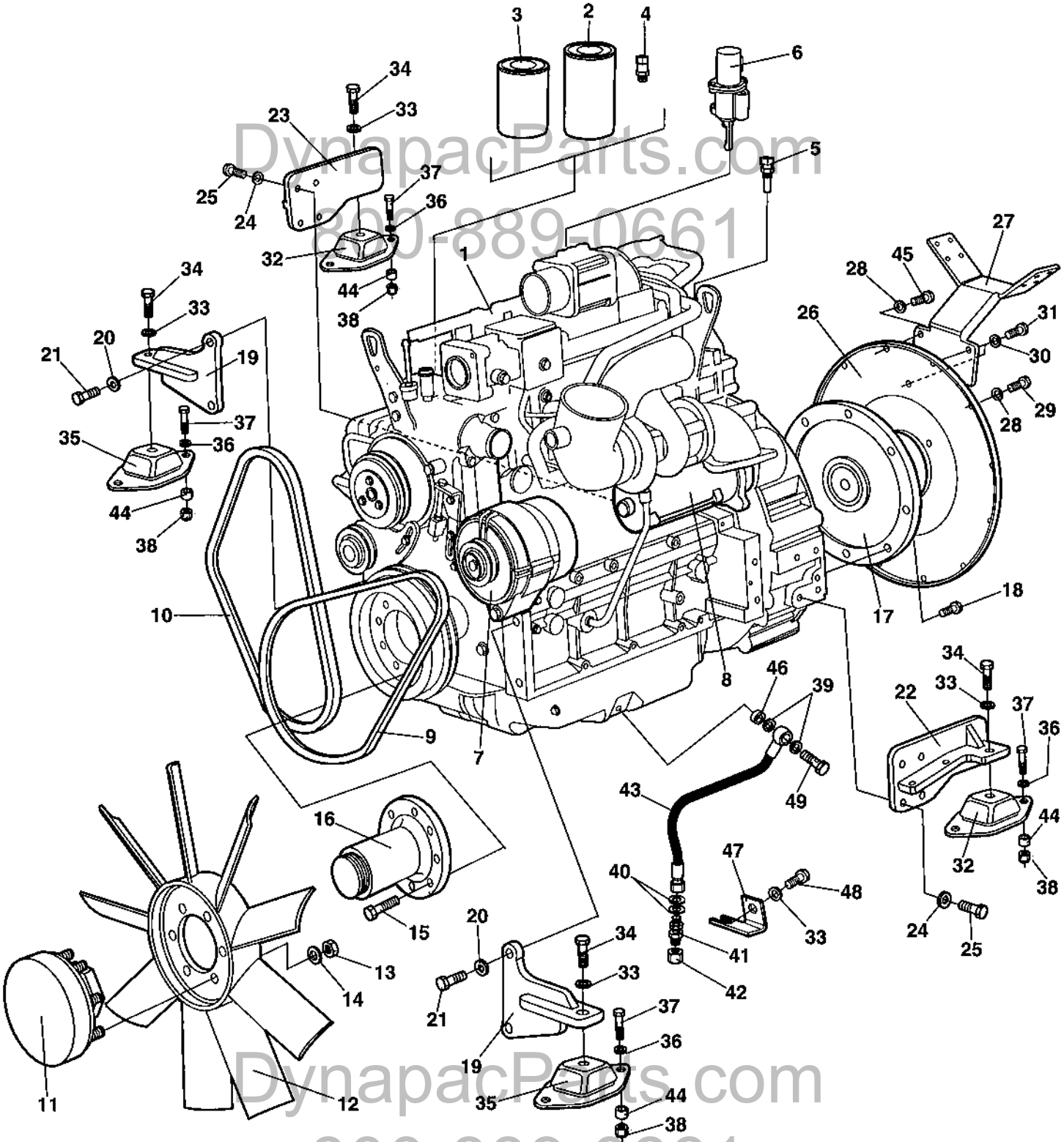

DynapacParts.com
800-889-0661
DynapacParts.com
800-889-0661

Engine Deutz BF4M2012C

Ref. No.	Part No.	Rem.	Qty	Description		Code
1	386926		1	Engine		
2	903942		1	.Oil filter element		A
3	939581		1	.Fuel filter element		A
4	939419		1	.Oil pressure sender		
5	939416		1	.Oil temp sender		
6	939415		1	.Fuel solenoid		D
7	939417		1	.Alternator		C
	939418		1	..Charging relay		
8	939431		1	.Starter		C
9	939420		1	.V-belt	Alternator	B
10	939421		1	.V-belt	Waterpump and Fan	B
11	939423		1	.Fan coupling		
12	939422		1	.Fan		
13	939424		6	.Nut		
14	939425		6	.Washer		
15	939427		9	.Bolt		
16	939426		1	.Fan adapter		
17	370229		1	Coupling, cpl		
18	508053		8	Screw		
19	387107		2	Engine bracket	Rear	
20	904232		4	Washer		
21	500093		4	Screw	M16x40	
22	387108		1	Engine bracket	Front, right side	
23	387109		1	Engine bracket	Front, left side	
24	904638		8	Washer	12x22x2	
25	500037		8	Screw		
26	372772		1	Bracket		
27	372358		1	Bracket		
28	904637		12	Washer		
29	500028		10	Screw		
30	904229		1	Washer		
31	500053		1	Screw		
32	387128		2	Shock absorber		
33	904232		5	Washer		
34	500070		4	Screw	M16x50	
35	387129		2	Shock absorber		D
36	904703		8	Washer		
37	500195		8	Screw Up to ECN04250		
	500194		8	Screw From ECN04250		
38	586019		8	Lock nut		
39	330331		2	Washer	18,2x23,9x1,5	
40	904233		2	Washer		
41	230515		1	Connector		
42	330383		1	Cap hydraulic		
43	389138		1	Hydraulic hose		
44	375152		8	Spacer Up to ECN04250		
	904703		8	Washer From ECN04250		
45	500029		2	Screw		
46	371727		1	Sleeve		
47	388855		1	Bracket		
48	500154		1	Screw	M16-2,0x25 8,8	
49	747691		1	Hollow screw		

DynapacParts.com
800-889-0661
DynapacParts.com
800-889-0661

Cooling system

17752

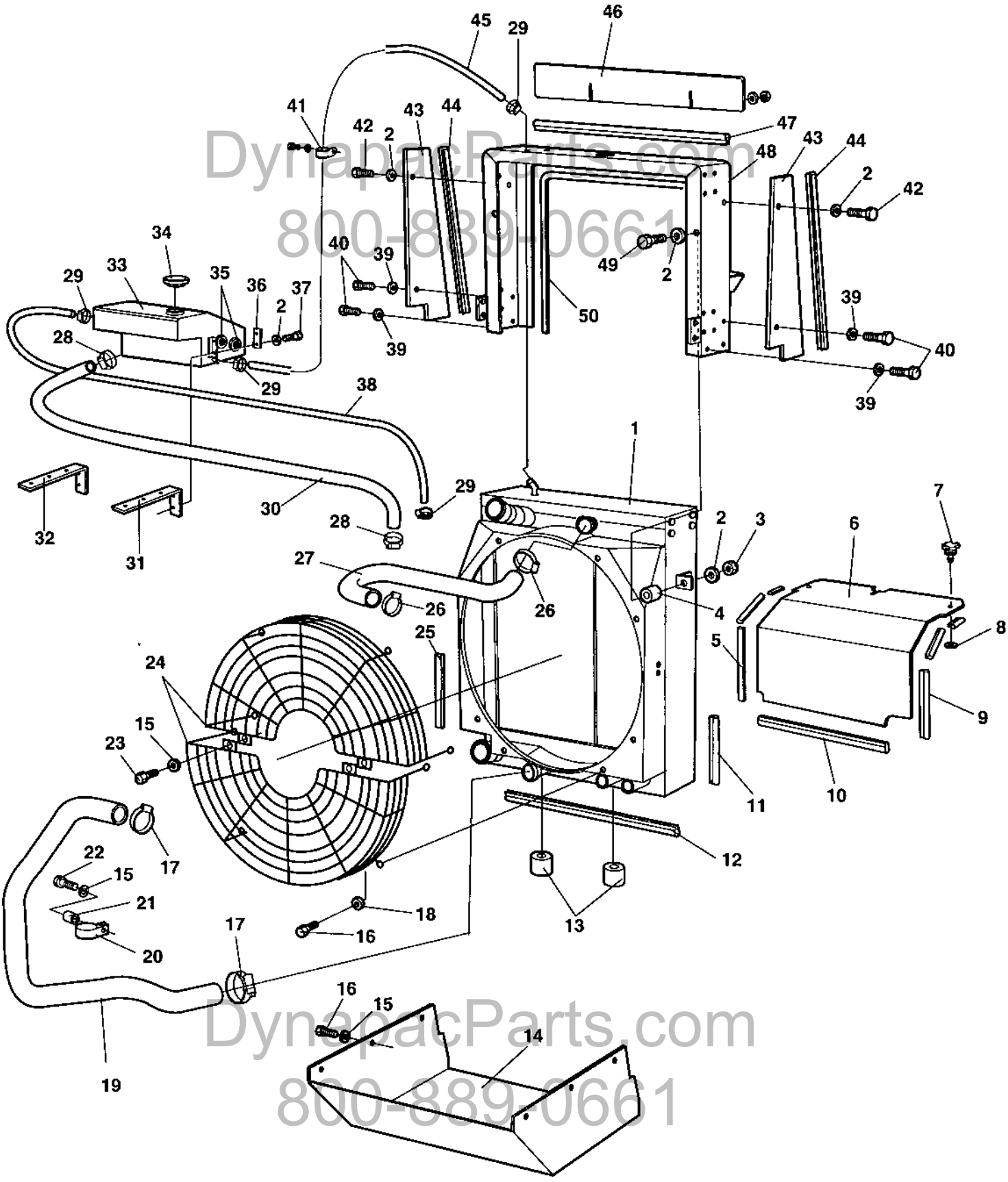

DynapacParts.com
800-889-0661

Cooling system

Ref. No.	Part No.	Rem.	Qty	Description	Code
1	386844		1	Radiator Up to 68X10607	
	377707		1	Radiator From 68X10608	
2	904228		10	Washer	
3	902285		2	Lock nut	
4	371774		2	Shock absorber	
5	902166	A	1	Edge trim	
6	386853		1	Air inlet plate	
7	904486		2	Quick lock	
8	926985		2	Quick lock washer	
9	902166	B	1	Edge trim	
10	902166	C	1	Edge trim	
11	202041	D	1	Rubber strip	
12	902166	E	1	Edge trim Up to 68X10371	
	202056	J	1	Edge trim From 68X10372	
13	904551		2	Shock absorber	
14	386943		1	Air leading plate	
15	904229		9	Washer	
16	500053		14	Screw Up to 68X10371	
	500053		19	Screw From 68X10372	
17	313010		2	Hose clamp	
18	904640		8	Washer	
19	387124		1	Coolant hose	
20	904352		1	Clamp	32x8,4x20
21	370222		1	Spacer sleeve	
22	904241		1	Screw	M8x40
23	500018		2	Screw	M8-1,25x12 8,8
24	386904		2	Fan guard	
25	202041	D	1	Rubber strip	
26	313010		2	Hose clamp	
27	386847		1	Coolant hose	
28	313004		2	Hose clamp	
29	313075		4	Hose clamp	
30	387217	F	1	Coolant hose	
31	386850		1	Bracket	
32	386851		1	Bracket	
33	386848		1	Expansion tank	
34	903714		1	Cap	
35	372597		2	Level glass	
36	381413		2	Washer	
37	500040		4	Screw	
38	387218		1	Rubber hose	
39	904230		4	Washer	
40	500029		4	Screw	
41	921050		1	Clamp	
42	500040		4	Screw	
43	371959		2	Air leading plate	
44	902166	G	2	Edge trim	
45	387217		1	Coolant hose	
46	387680		1	Air inlet	
47	288129	H	1	Edge trim	

A) L=0,330 m
B) L=0,450 m
C) L=0,690 m
D) L=0,310 m
E) L=0,580 m
F) L=1,4 m
G) L=0,470 m
H) L=0,730 m
J) L=0,565 m

DynapacParts.com
800-889-0661
DynapacParts.com
800-889-0661

Cooling system

17752

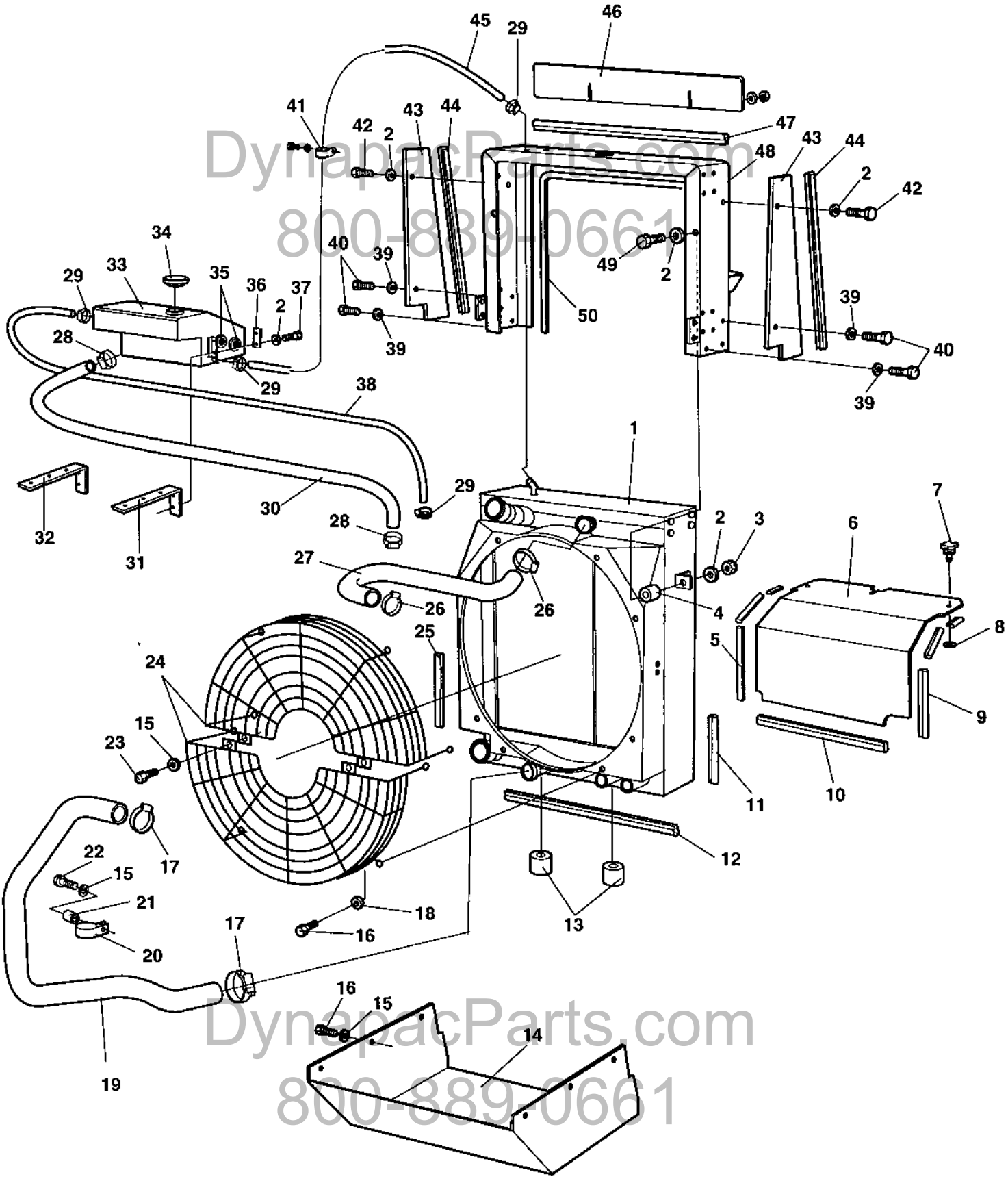

DynapacParts.com
800-889-0661

Cooling system

Ref. No.	Part No.	Rem.	Qty	Description	Code
48	386845		1	Cooler frame Up to 68X10371	
	389145		1	Cooler frame From 68X10372	
49	500012		2	Screw	
50	288129	I	1	Edge trim	

I) L=1,60 m

DynapacParts.com
800-889-0661

DynapacParts.com
800-889-0661

Cooling system

17935

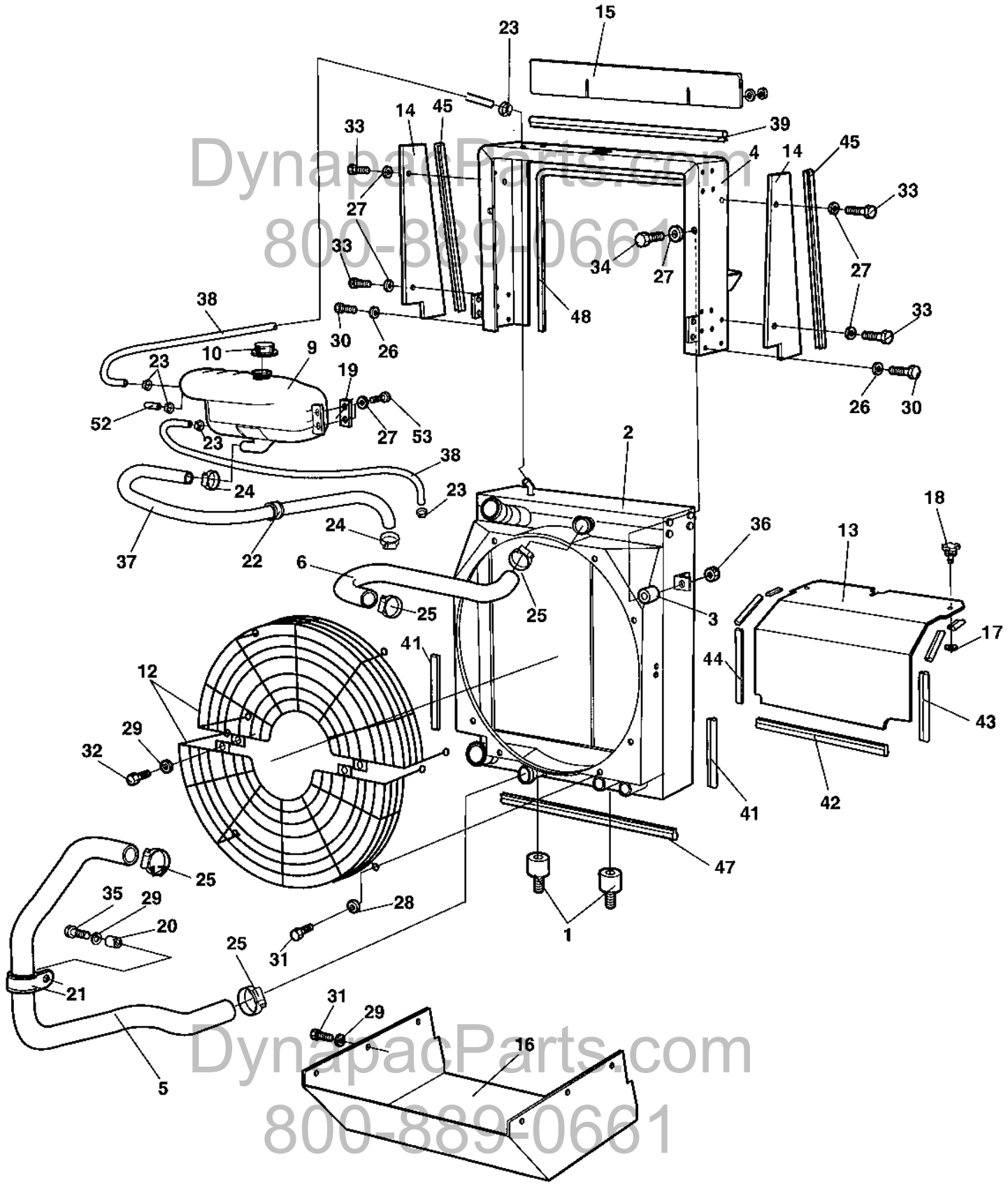

DynapacParts.com
800-889-0661
DynapacParts.com
800-889-0661

Cooling system

Ref. No.	Part No.	Rem.	Qty	Description	Code
1	904551		2	Shock absorber	
2	386844		1	Radiator	
3	371774		2	Shock absorber	
4	389145		1	Cooler frame	
5	387124		1	Coolant hose	
6	386847		1	Coolant hose	
9	386849		1	Expansion tank	
10	903714		1	Cap	
12	386904		2	Fan guard	
13	386853		1	Air inlet plate	
14	371959		2	Air leading plate	
15	387680		1	Air inlet	
16	386943		1	Air leading plate	
17	926985		2	Quick lock washer	
18	904486		2	Quick lock	
19	381413		2	Washer	
20	370222		1	Spacer sleeve	
21	904352		1	Clamp	32x8,4x20
22	921050		1	Clamp	
23	313075		5	Hose clamp	
24	313006		2	Hose clamp	
25	313010		4	Hose clamp	
26	904230		4	Washer	
27	904228		10	Washer	
28	904640		8	Washer	
29	904229		9	Washer	
30	500029		4	Screw	
31	500053		14	Screw	
32	500018		2	Screw	M8-1,25x12 8,8
33	500040		4	Screw	
34	500012		2	Screw	
35	904241		1	Screw	M8x40
36	902285		2	Lock nut	
37	387217	F	1	Coolant hose	
38	387218		1	Rubber hose	
39	288129	I	1	Edge trim	
41	202041	D	2	Rubber strip	
42	902166	B	1	Edge trim	
43	902166	C	1	Edge trim	
44	902166	A	1	Edge trim	
45	902166	G	2	Edge trim	
47	202056	J	1	Edge trim	
48	288129	H	1	Edge trim	
52	791423		1	Protecting cover	
53	500075		4	Screw	M6-1,0x25 8.8

A) L=0,330 m
B) L=0,450 m
C) L=0,690 m
D) L=0,310 m
F) L=1,4 m
G) L=0,470 m
H) L=0,730 m
I) L=1,60 m
J) L=0,565 m

DynapacParts.com
800-889-0661
DynapacParts.com
800-889-0661

Combustion air system

17756

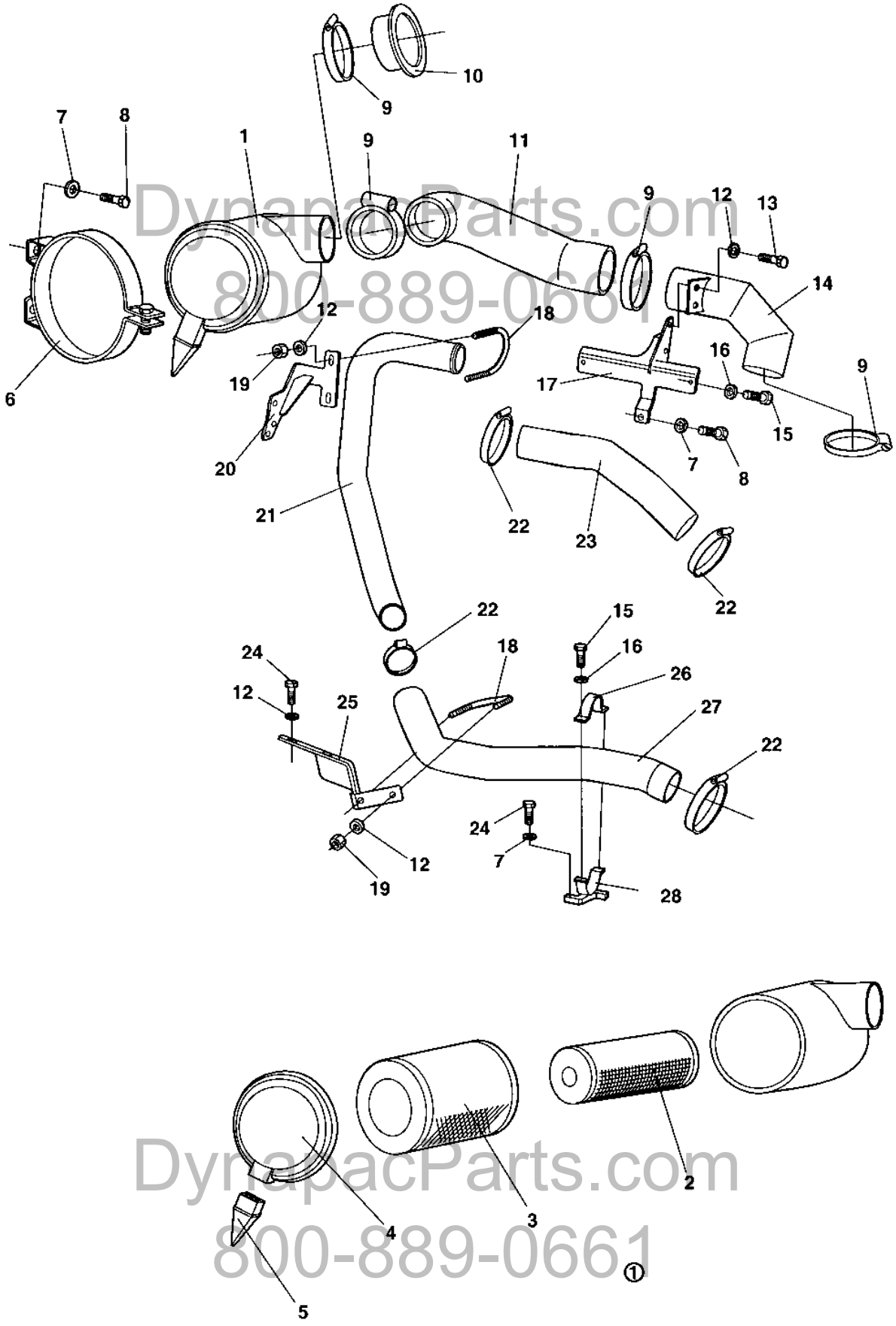

DynapacParts.com
800-889-0661

Combustion air system

Ref. No.	Part No.	Rem.	Qty	Description		Code
1	370953		1	Air cleaner		
2	394687		1	.Air filter element, safety		A
3	394686		1	.Air filter element, main		A
4	908452		1	.Cover		
5	908399		1	.Vacuator valve		D
6	813791		2	Mounting band		
7	904229		9	Washer		
8	500019		5	Screw		
9	904060		4	Hose clamp		
10	348309		1	Rubber bushing		
11	386820		1	Air inlet hose		
12	904640		8	Washer		
13	500053		2	Screw		
14	386819		1	Air inlet pipe		
15	500013		5	Screw		
16	904228		5	Washer		
17	388187		1	Holder		
18	814261		2	Clamp		
19	902286		4	Lock nut		
20	387032		1	Bracket		
21	386842		1	Charge air tube		
22	386966		5	Hose clamp	2.3/4"-3.5/8"	
23	386879		1	Air inlet hose		
24	500022		6	Screw		
25	386942		1	Bracket		
26	387178		2	Holder		
27	386843		1	Air inlet hose		
28	387186		2	Holder		

DynapacParts.com
800-889-0661

DynapacParts.com
800-889-0661

Combustion air system

17756-1

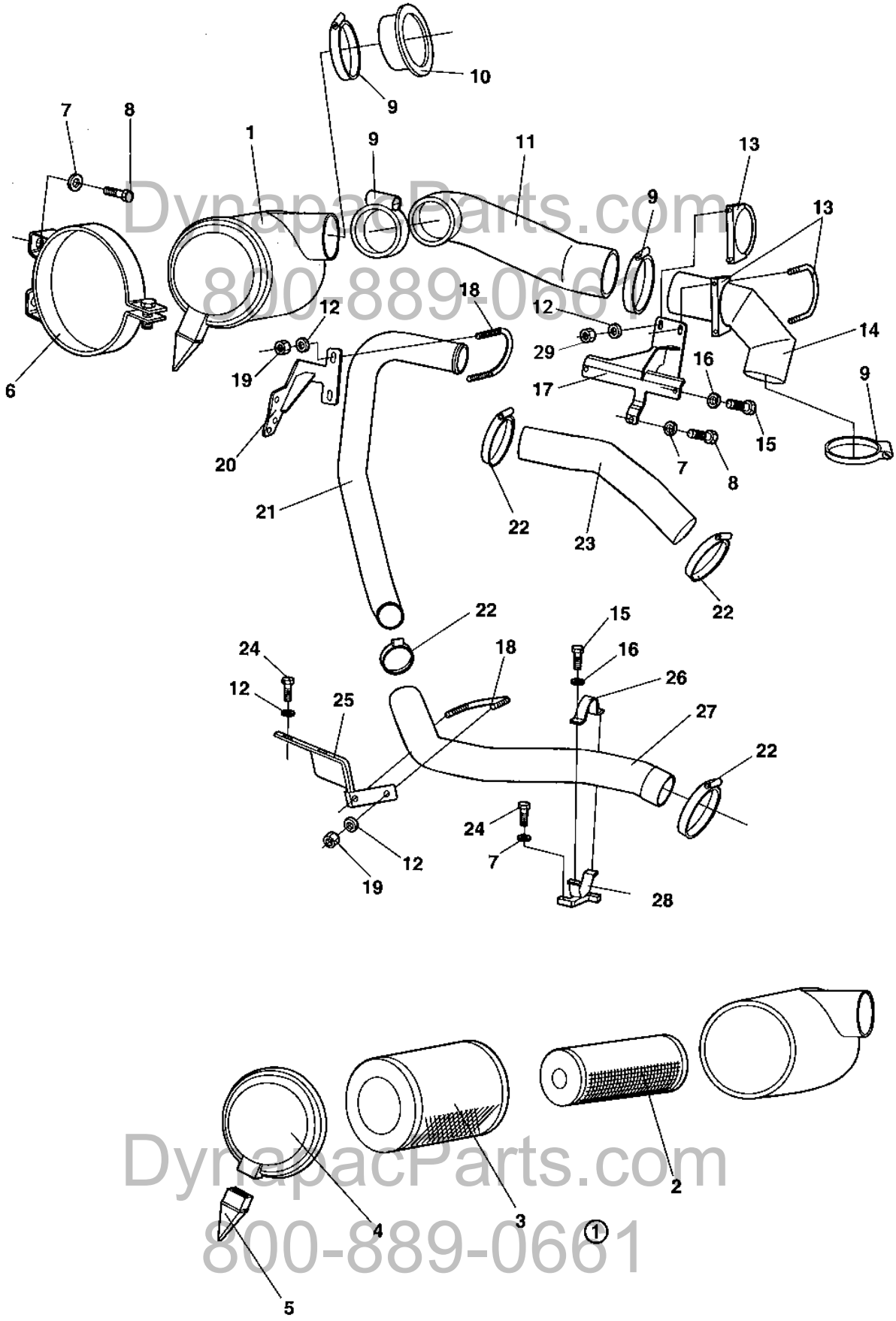

DynapacParts.com
800-889-0661

Combustion air system

Ref. No.	Part No.	Rem.	Qty	Description		Code
1	370953		1	Air cleaner		
2	394687		1	.Air filter element, safety		A
3	394686		1	.Air filter element, main		A
4	908452		1	.Cover		
5	908399		1	.Vacuator valve		D
6	813791		2	Mounting band		
7	904229		9	Washer		
8	500019		5	Screw		
9	904060		4	Hose clamp		
10	348309		1	Rubber bushing		
11	386820		1	Air inlet hose		
12	904640		8	Washer		
13	923269		2	Clamp		
14	388111		1	Air inlet pipe		
15	500013		5	Screw		
16	904228		7	Washer		
17	388088		1	Holder		
18	814261		2	Clamp		
19	902286		4	Lock nut		
20	387032		1	Bracket		
21	386842		1	Charge air tube		
22	386966		5	Hose clamp	2.3/4"-3.5/8"	
23	386879		1	Air inlet hose		
24	500022		6	Screw		
25	386942		1	Bracket		
26	387178		2	Holder		
27	386843		1	Air inlet hose		
28	387186		2	Holder		
29	586003		4	Lock nut		

DynapacParts.com
800-889-0661

DynapacParts.com
800-889-0661

Fuel system

17760

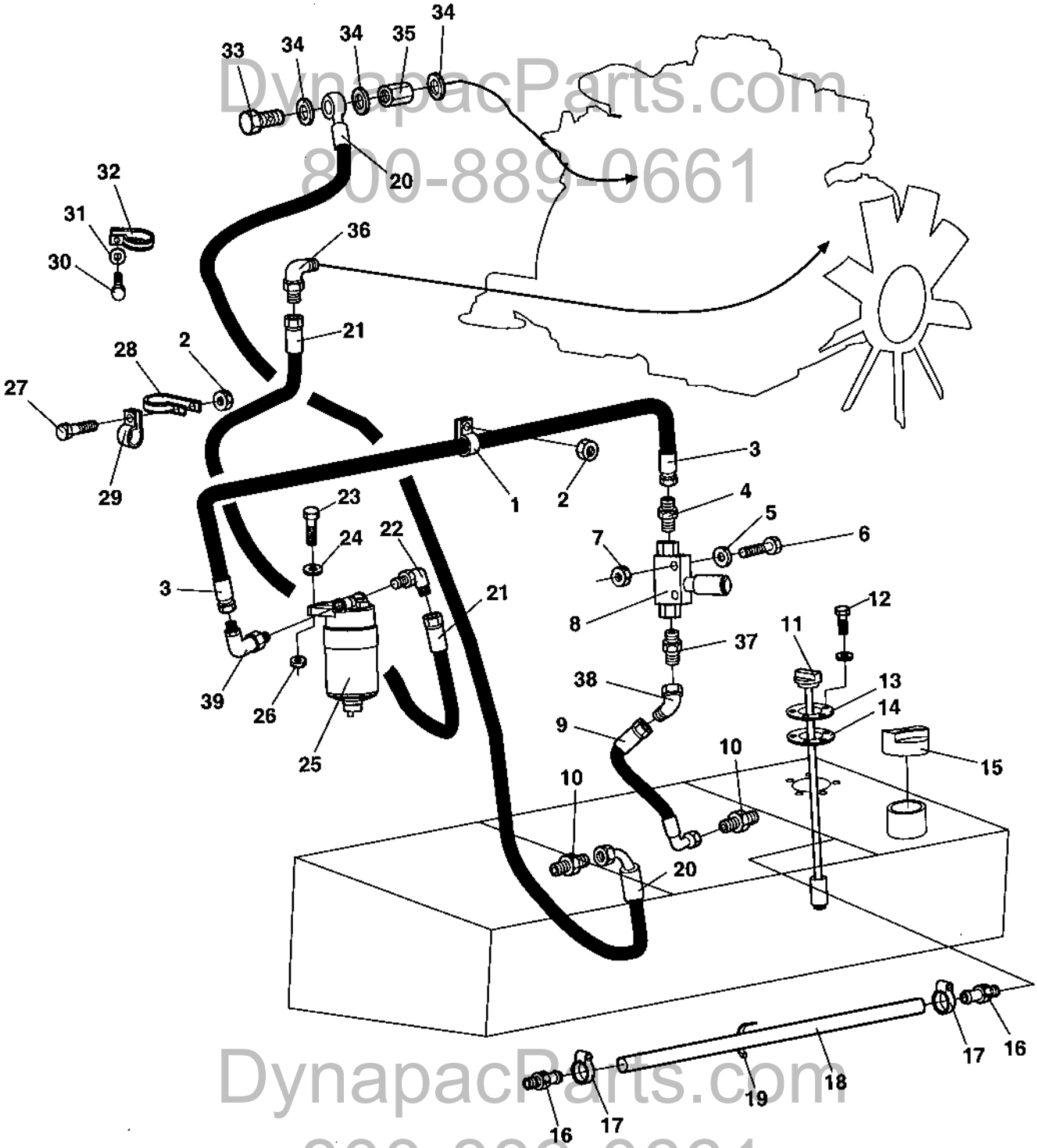

DynapacParts.com
800-889-0661
DynapacParts.com
800-889-0661

Fuel system

Ref. No.	Part No.	Rem.	Qty	Description		Code
1	903670		2	Clamp Up to 68X10371		
	921031		2	Clamp From 68X10372		
2	902285		3	Lock nut		
3	386957		1	Fuel hose Up to 68X10371		
	388144		1	Fuel hose From 68X10372		
4	925723		1	Connector Up to 68X10371		
	234382		1	Adapter From 68X10372		
5	904639		3	Washer	6,7x14x1,5	
6	500079		2	Screw	M6-1x50 8,8	
7	902285		2	Lock nut		
8	939466		1	Fuel pump		
9	386934		1	Fuel hose		
10	334117		2	Adapter		
11	387112		1	Fuel sender		
12	904206		5	Screw		
13	372718		1	Lid		
14	370745		1	Flange, cpl		
15	373460		1	Fuel cap		D
16	373574		2	Hose connection		
17	313002		2	Hose clamp	13-20 mm	
18	244054	A	1	Hose reinforced		
19	313041		N	Cable ties	L=186 mm	
20	386958		1	Fuel hose		
21	386956		1	Fuel hose		
22	928908		1	Adapter		
23	500030		2	Screw		
24	904230		2	Washer		
25	939467		1	Fuel filter, cpl		
	939468		1	.Fuel filter element		
26	586018		2	Lock nut		
27	500040		1	Screw		
28	921050		1	Clamp		
29	903670		1	Clamp		
30	500043		1	Screw		
31	904230		1	Washer		
32	921104		1	Clamp		
33			1	Hollow screw		
34	747282		3	Copper washer		
35	387994		1	Spacer		
36	928908		1	Adapter		
37	925723		1	Connector		
38	234662		1	Elbow 45		
39	928908		1	Adapter Up to 68X10371		
	791575		1	Elbow 45, O-ring From 68X10372		

A) L=0,700 m

DynapacParts.com
800-889-0661

DynapacParts.com
800-889-0661

Exhaust system

17750-1

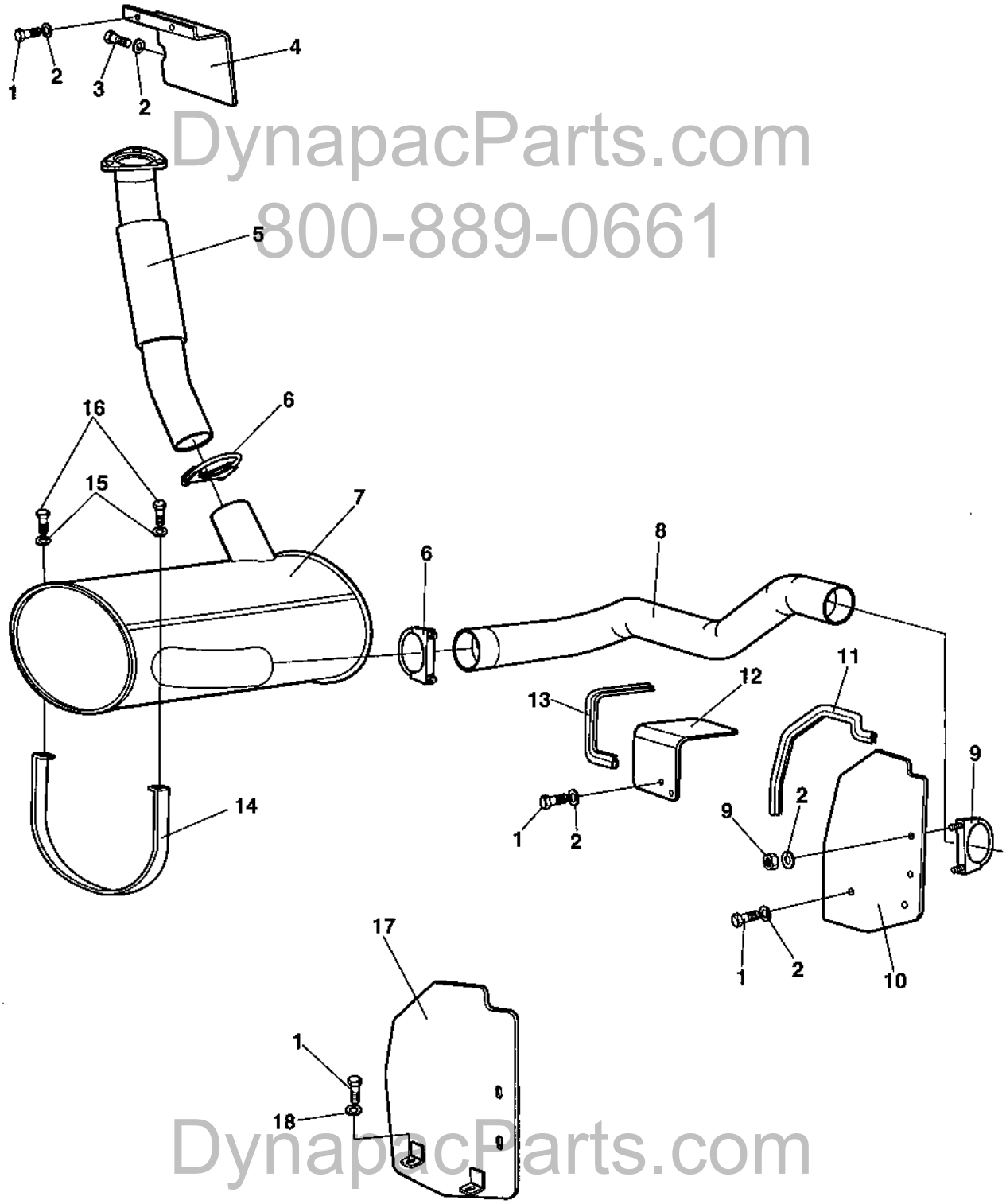

DynapacParts.com
800-889-0661
DynapacParts.com
800-889-0661

Exhaust system

Ref. No.	Part No.	Rem.	Qty	Description	Code
1	500053		6	Screw	
2	904229		9	Washer Up to 68X10506	
	904229		7	Washer From 68X10507	
3	500021		1	Screw	
4	387159		1	Thermal guard	
5	386841		1	Exhaust pipe	
6	313094		2	Pipe clamp	
7	387086		1	Muffler	
8	386937		1	Exhaust hose	
9	313093		1	Pipe clamp	
10	386952		1	Thermal guard Up to 68X10506	
11	902166	A	1	Edge trim	
12	386954		1	Thermal guard	
13	902166	B	1	Edge trim	
14	386789		2	Clamp	
15	904640		4	Washer	
16	500022		4	Screw	
17	377098		1	Thermal guard From 68X10507	
18	904640		2	Washer From 68X10507	

A) L=80 mm
B) L=0,41 M

DynapacParts.com
800-889-0661

DynapacParts.com
800-889-0661

High mounted exhaust system Option

17856

DynapacParts.com
800-889-0661

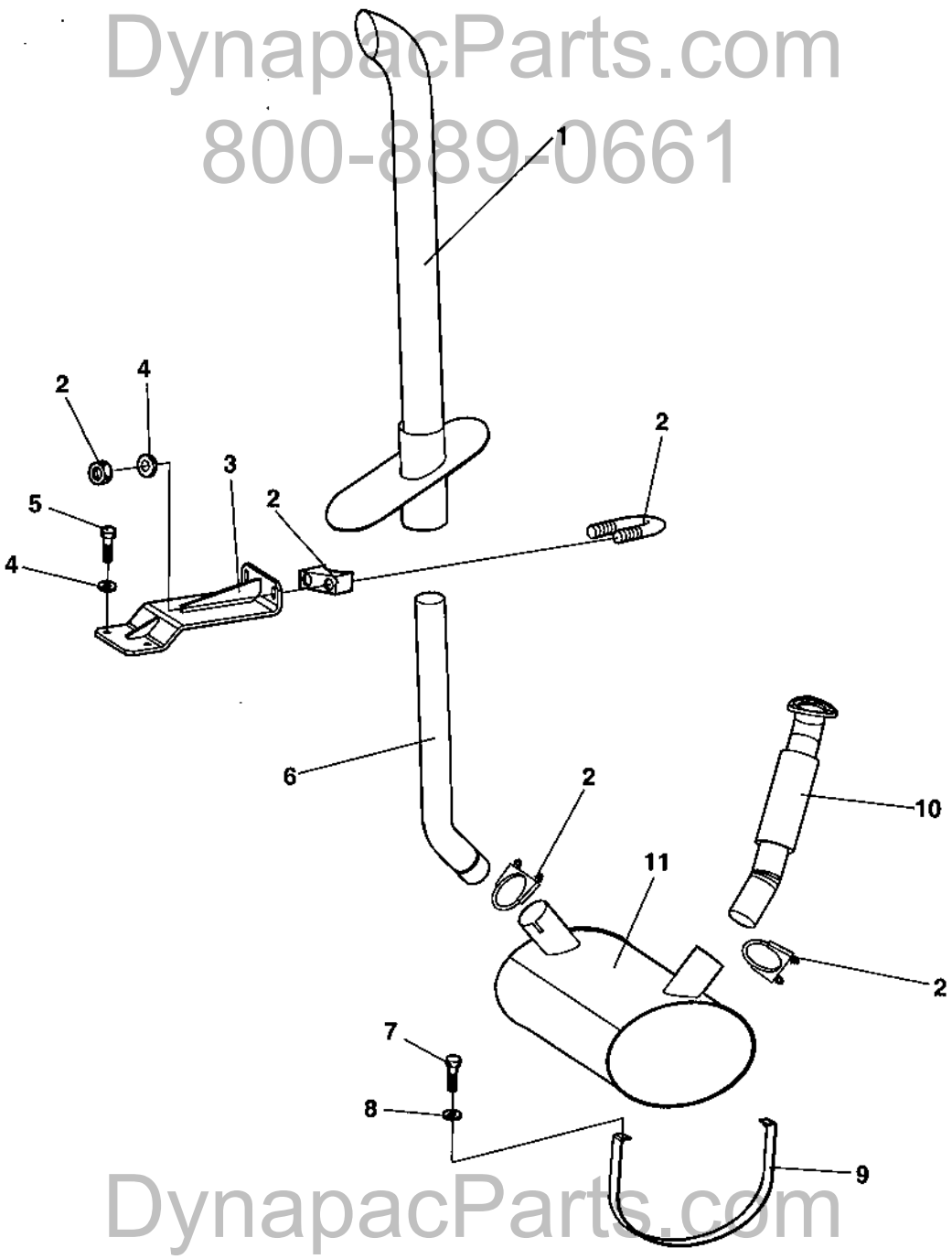

DynapacParts.com
800-889-0661

High mounted exhaust system Option

Ref. No.	Part No.	Rem.	Qty	Description	Code
1	375182		1	Exhaust pipe	
2	313094		3	Pipe clamp	
3	375041		1	Bracket	
4	904229		5	Washer	
5	500053		2	Screw	
6	386962		1	Exhaust pipe	
7	500022		4	Screw	
8	904640		4	Washer	
9	386789		2	Clamp	
10	386841		1	Exhaust pipe	
11	386973		1	Muffler	

DynapacParts.com
800-889-0661

DynapacParts.com
800-889-0661

DynapacParts.com
800-889-0661

DynapacParts.com
800-889-0661

Ref. No.	Part No.	Rem.	Qty	Description	Code
15				Rear axle and wheels Up to 68X10705 (Page 82)	
16				Rear axle and wheels From 68X10706 Up to 68X10720 (Page 84)	
17				Rear axle and wheels From 68X10721 Up to 68X10842 (Page 86)	
18				Rear axle and wheels From 68X10843 (Page 88)	
21	383857			Rear axle (Page 90)	
70	383856			Rear axle (Page 98)	No-Spin, Option

DynapacParts.com
800-889-0661

DynapacParts.com
800-889-0661

Rear axle and wheels

15984-1

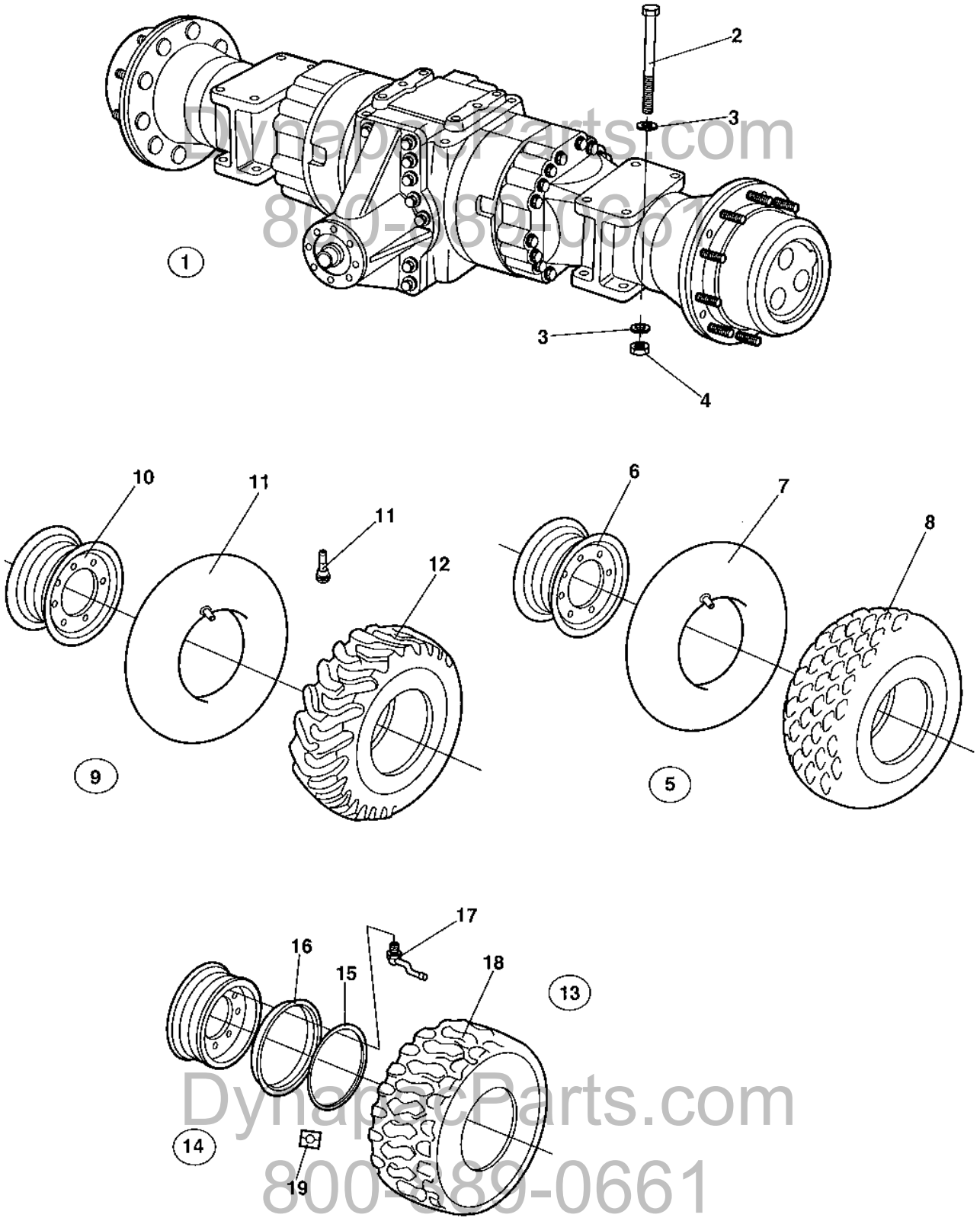

DynapacParts.com
800-689-0661

Rear axle and wheels

Ref. No.	Part No.	Rem.	Qty	Description		Code
1	383857		1	Rear axle (Page 90)		
2	929217		8	Screw		
3	904233		16	Washer		
4	901145		8	Lock nut	M20-10	
5	383976		2	Wheel, cpl		
	383977	A	2	Wheel, cpl		
	388145	A,G	1	Wheel, cpl		
	388146	G	1	Wheel, cpl		
6	383933		1	.Rim		
7	813380		1	.Inner tube		D
8	813379		1	.Tyre		D
	791573	J,G	1	.Tyre		D
9	383980	B	1	Tractor wheel, cpl		
	383981	C	1	Tractor wheel, cpl		
	383978	D	1	Tractor wheel, cpl		
	383979	E	1	Tractor wheel, cpl		
10	383956		1	.Rim		
11	373176		1	.Tube		D
	902239	K	1	.Air charging valve	Straight	B
12	373131		1	.Tyre		D
13	383974	F	2	Wheel, tubeless, cpl		
	383975	A	2	Wheel, tubeless, cpl		
14	383955		1	.Rim cpl		
15	901443		1	..Snap ring		
16	901444		1	..Side ring		
17	901219		1	.Air charging valve		
18	901218		1	.Tyre		D
19	355983	H	2	Decal "TYRE PRESSURE"	200kPa/29psi	
	903985	I	2	Decal "SAFETY", "TYRE IN BALLAST"		

A) Liquidfilled, option
B) Left, option
C) Right, option
D) Liquidfilled, IRight, option
E) Liquidfilled, Left, option
F) Option
G) For Chinese market only.
H) Used with item 383974. 383975
I) Used with item 383977, 383978, 383979
J) Used together with 388145 and 388146.
K) Used together with Non Liquedfilled Tubless Tractor tyres.

DynapacParts.com
800-889-0661

DynapacParts.com
800-889-0661

Rear axle and wheels

18225

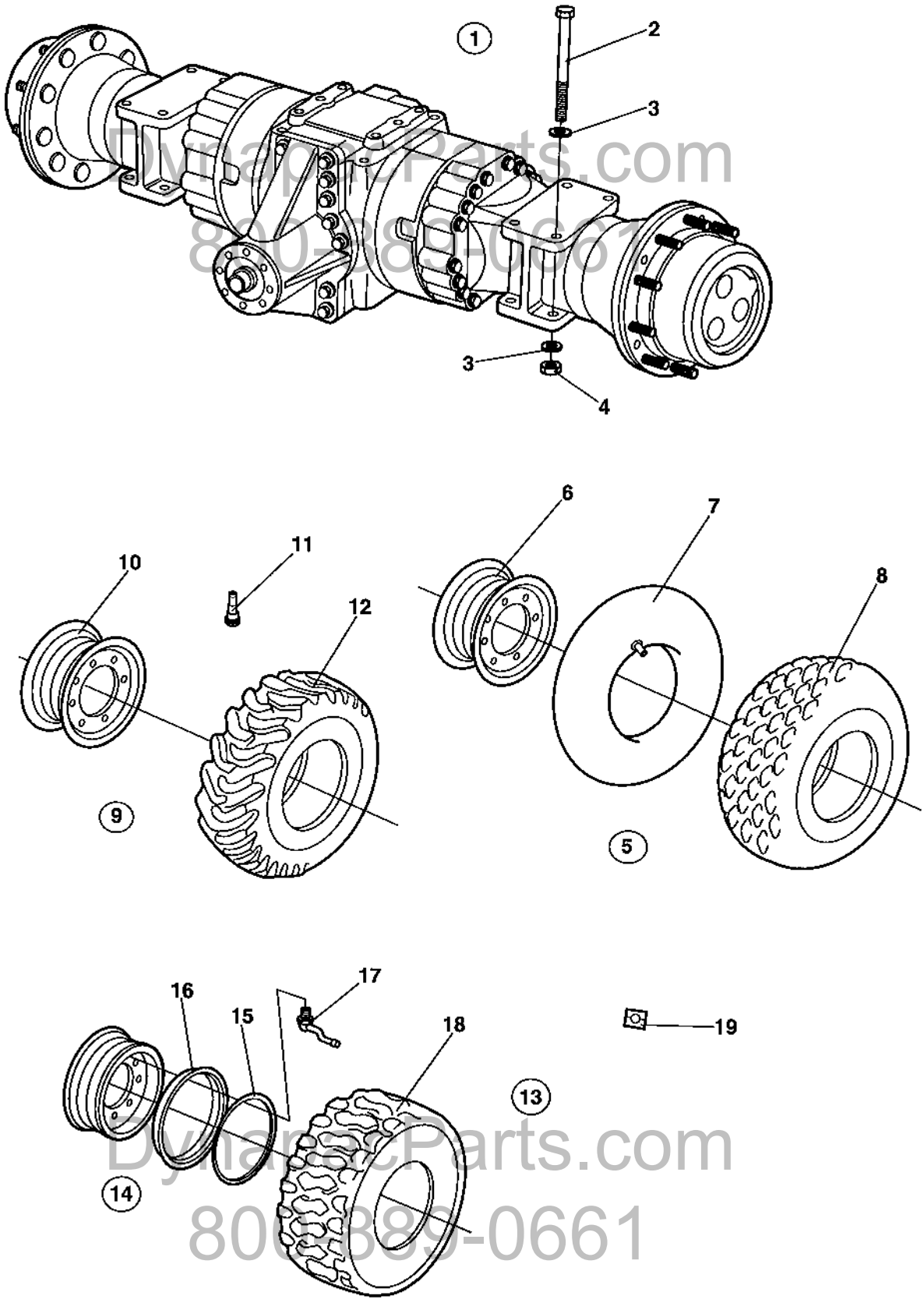

DynapacParts.com
800-889-0661

Rear axle and wheels

Ref. No.	Part No.	Rem.	Qty	Description		Code
1	383857		1	Rear axle (Page 90)		
2	929217		8	Screw		
3	904233		16	Washer		
4	901145		8	Lock nut	M20-10	
5	383976		2	Wheel, cpl		
	383977	A	2	Wheel, cpl		
	388145	A,G	1	Wheel, cpl		
	388146	G	1	Wheel, cpl		
6	383933		1	.Rim		
7	813380		1	.Inner tube		D
8	813379		1	.Tyre		D
	791573	J,G	1	.Tyre		D
9	379412	B	1	Tractor wheel, cpl		
	379411	C	1	Tractor wheel, cpl		
	379413	D	1	Tractor wheel, cpl		
	379414	E	1	Tractor wheel, cpl		
10	383933		1	.Rim		
11	792261		1	.Air charging valve	Straight	B
12	379410		1	.Tyre		D
13	383974	F	2	Wheel, tubeless, cpl		
	383975	K	2	Wheel, tubeless, cpl		
14	383955		1	.Rim cpl		
15	901443		1	..Snap ring		
16	901444		1	..Side ring		
17	791175		1	.Air charging valve		
	791176		1	.Valve foot		
18	901218		1	.Tyre		D
19	355983	H	2	Decal "TYRE PRESSURE"	200kPa/29psi	
	903985	I	2	Decal "SAFETY", "TYRE IN BALLAST"		

A) Liquidfilled, option.
B) Left, option.
C) Right, option.
D) Liquidfilled tyre, right, option.
E) Liquidfilled tyre, left, option.
F) Option, Michelin branded.
G) For Chinese market only.
H) Used with item 13, 383974. 383975.
I) Used with Liqued filled tyres.
J) Used together with 388145 and 388146.
K) Liquidfilled, option, Michelin branded.

DynapacParts.com
800-889-0661

DynapacParts.com
800-889-0661

Rear axle and wheels

18225-1

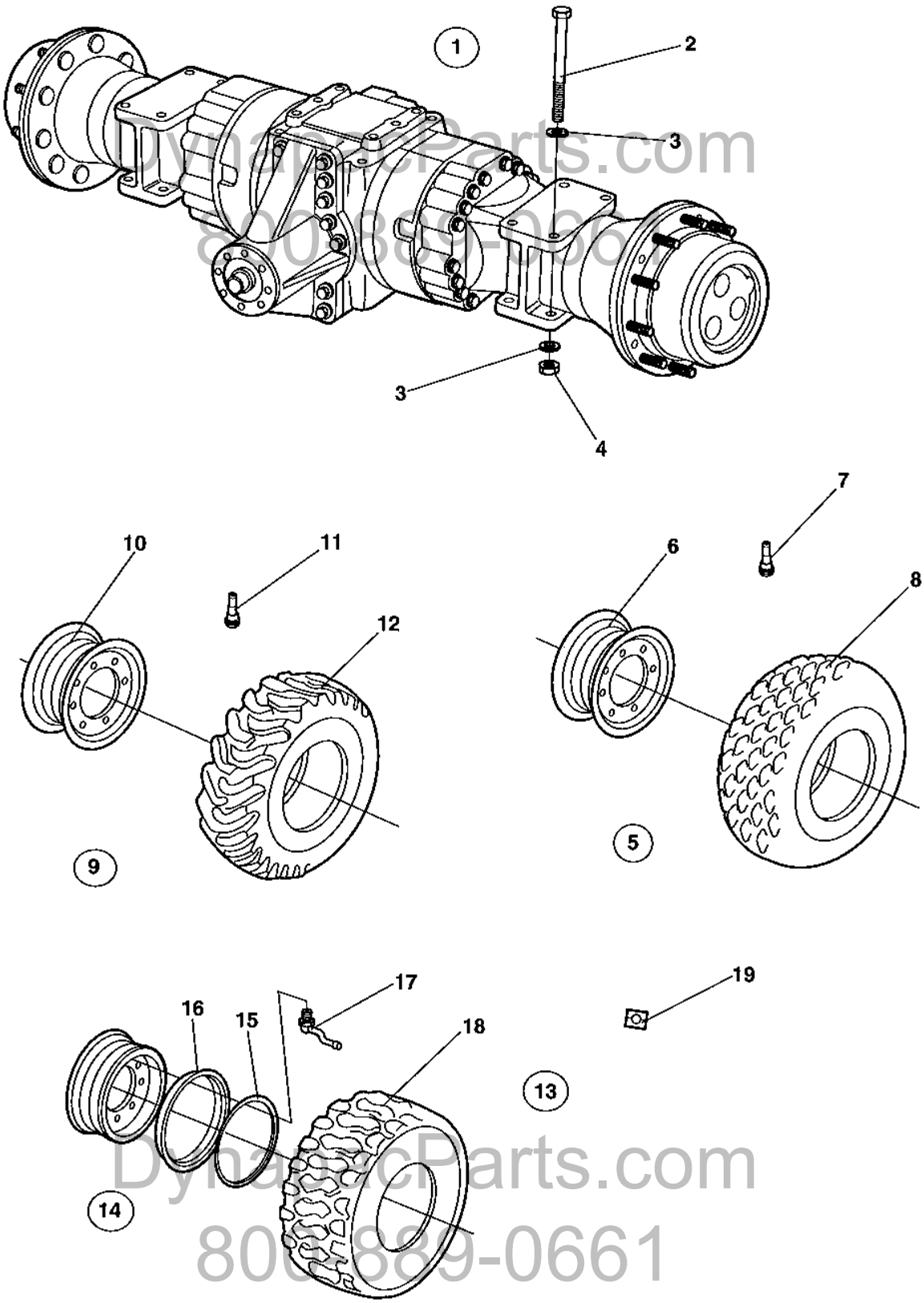

DynapacParts.com
800-889-0661

Rear axle and wheels

Ref. No.	Part No.	Rem.	Qty	Description		Code
1	383857		1	Rear axle (Page 90)		
2	929217		8	Screw		
3	904233		16	Washer		
4	901145		8	Lock nut	M20-10	
5	379631		2	Wheel, cpl		
	379691	A	2	Wheel, cpl		
	388145	A,G	1	Wheel, cpl		
	388146	G	1	Wheel, cpl		
6	383933		1	.Rim		
7	792261		1	.Air charging valve	Straight	B
8	379632		1	.Tyre		D
	791573	J,G	1	.Tyre		D
9	379412	B	1	Tractor wheel, cpl		
	379411	C	1	Tractor wheel, cpl		
	379413	D	1	Tractor wheel, cpl		
	379414	E	1	Tractor wheel, cpl		
10	383933		1	.Rim		
11	792261		1	.Air charging valve	Straight	B
12	379410		1	.Tyre		D
13	383974	F	2	Wheel, tubeless, cpl		
	383975	K	2	Wheel, tubeless, cpl		
14	383955		1	.Rim cpl		
15	901443		1	..Snap ring		
16	901444		1	..Side ring		
17	791175		1	.Air charging valve		
	791176		1	.Valve foot		
18	901218		1	.Tyre		D
19	355983	H	2	Decal "TYRE PRESSURE"	200kPa/29psi	
	903985	I	2	Decal "SAFETY", "TYRE IN BALLAST"		

A) Liquidfilled, option.
B) Left, option.
C) Right, option.
D) Liquidfilled tyre, right, option.
E) Liquidfilled tyre, left, option.
F) Option, Michelin branded.
G) For Chinese market only.
H) Used with item 13, 383974. 383975.
I) Used with Liqued filled tyres.
J) Used together with 388145 and 388146.
K) Liquidfilled, option, Michelin branded.

DynapacParts.com
800-889-0661

DynapacParts.com
800-889-0661

Rear axle and wheels

18225-1

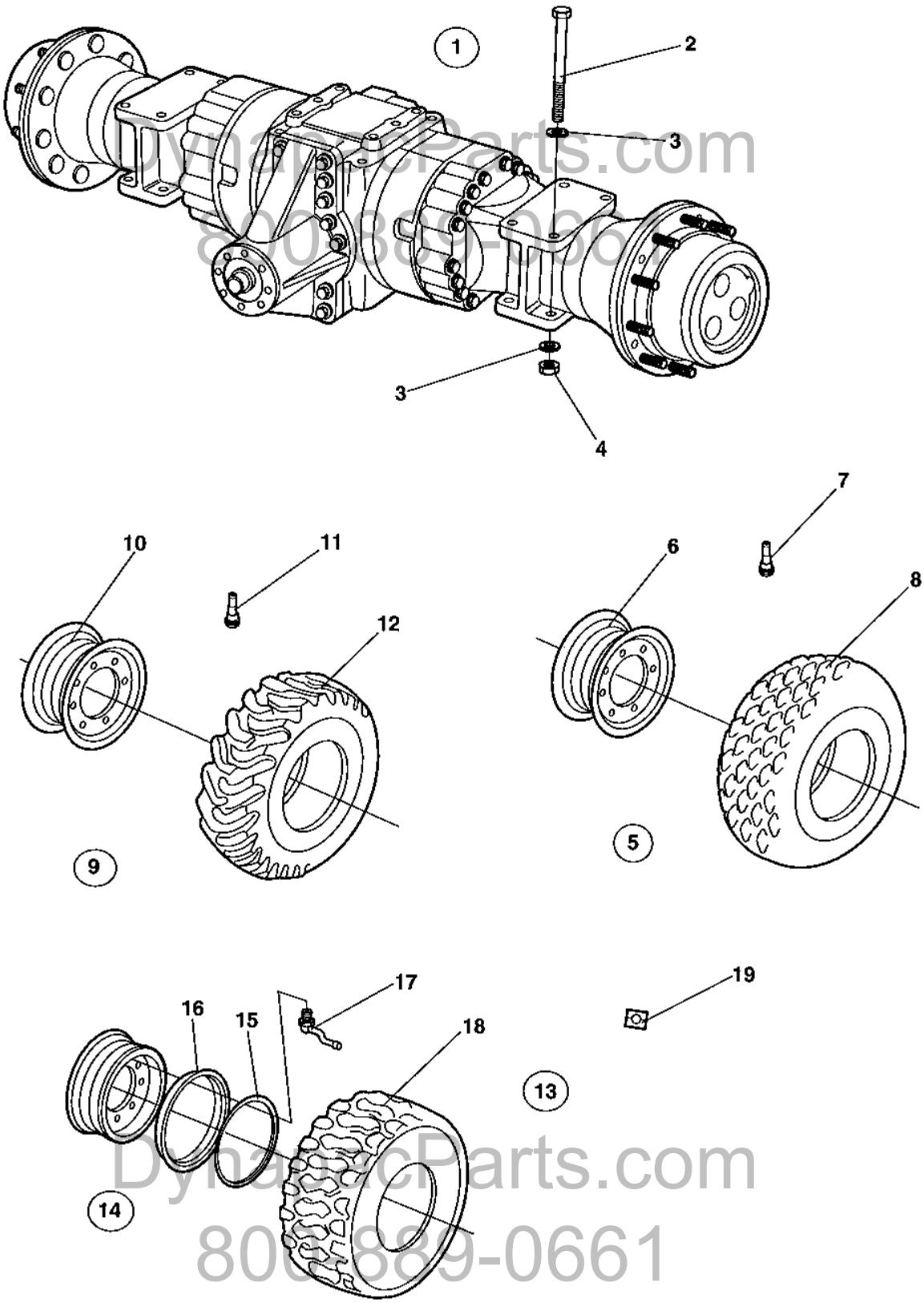

DynapacParts.com
800-889-0661

Rear axle and wheels

Ref. No.	Part No.	Rem.	Qty	Description		Code
1	383857		1	Rear axle (Page 90)		
2	929217		8	Screw		
3	904233		16	Washer		
4	901145		8	Lock nut	M20-10	
5	379631		2	Wheel, cpl		
	379691	A	2	Wheel, cpl		
	388145	A,G	1	Wheel, cpl		
	388146	G	1	Wheel, cpl		
6	383933		1	.Rim		
7	792261		1	.Air charging valve	Straight	B
8	379632		1	.Tyre		D
	791573	J,G	1	.Tyre		D
9	390588	B	1	Tractor wheel, cpl		
	390587	C	1	Tractor wheel, cpl		
	390759	D	1	Tractor wheel, cpl		
	390760	E	1	Tractor wheel, cpl		
10	383933		1	.Rim		
11	792261		1	.Air charging valve	Straight	B
12	390589		1	.Tyre		D
13	383974	F	2	Wheel, tubeless, cpl		
	383975	K	2	Wheel, tubeless, cpl		
14	383955		1	.Rim cpl		
15	901443		1	..Snap ring		
16	901444		1	..Side ring		
17	791175		1	.Air charging valve		
	791176		1	.Valve foot		
18	901218		1	.Tyre		D
19	355983	H	2	Decal "TYRE PRESSURE"	200kPa/29psi	
	903985	I	2	Decal "SAFETY", "TYRE IN BALLAST"		

A) Liquidfilled, option.
B) Left, option.
C) Right, option.
D) Liquidfilled tyre, right, option.
E) Liquidfilled tyre, left, option.
F) Option, Michelin branded.
G) For Chinese market only.
H) Used with item 13, 383974. 383975.
I) Used with Liqued filled tyres.
J) Used together with 388145 and 388146.
K) Liquidfilled, option, Michelin branded.

DynapacParts.com
800-889-0661

DynapacParts.com
800-889-0661

383857 Rear axle

17671

DynapacParts.com
800-889-0661

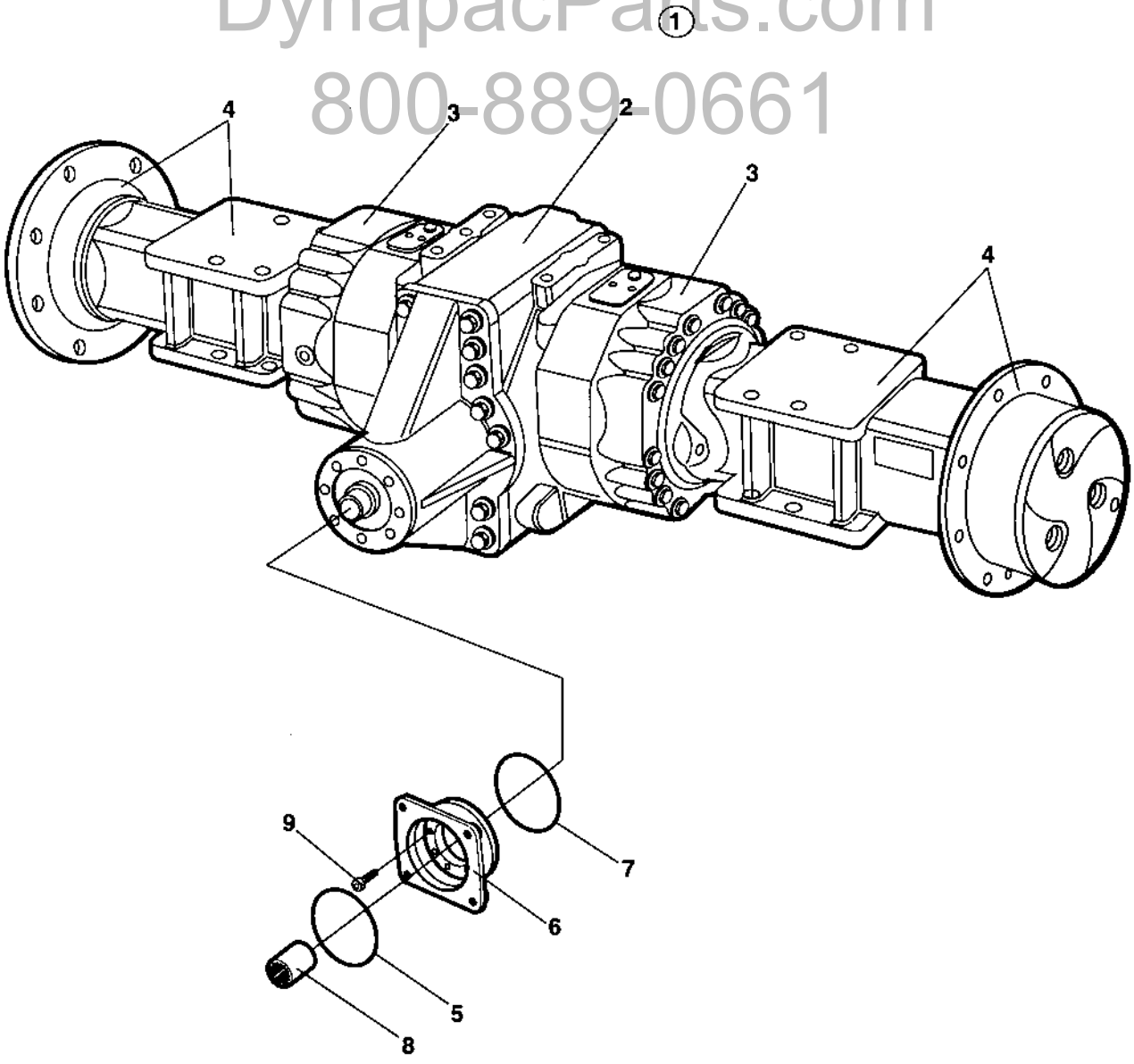

DynapacParts.com
800-889-0661

383857 Rear axle

Ref. No.	Part No.	Rem.	Qty	Description	Code
1			1	Rear axle	
2			1	.Differential with limited slip (Page 92)	
3			2	.Differential housing and brakes (Page 94)	
4			2	.Planet gear (Page 96)	
5	909584		1	O-ring	D
6	909583		1	Flange	
7	929648		1	O-ring	D
8	901834		1	Splined sleeve	
9	909582		8	Screw	

DynapacParts.com
800-889-0661

DynapacParts.com
800-889-0661

Differential with limited slip

17672

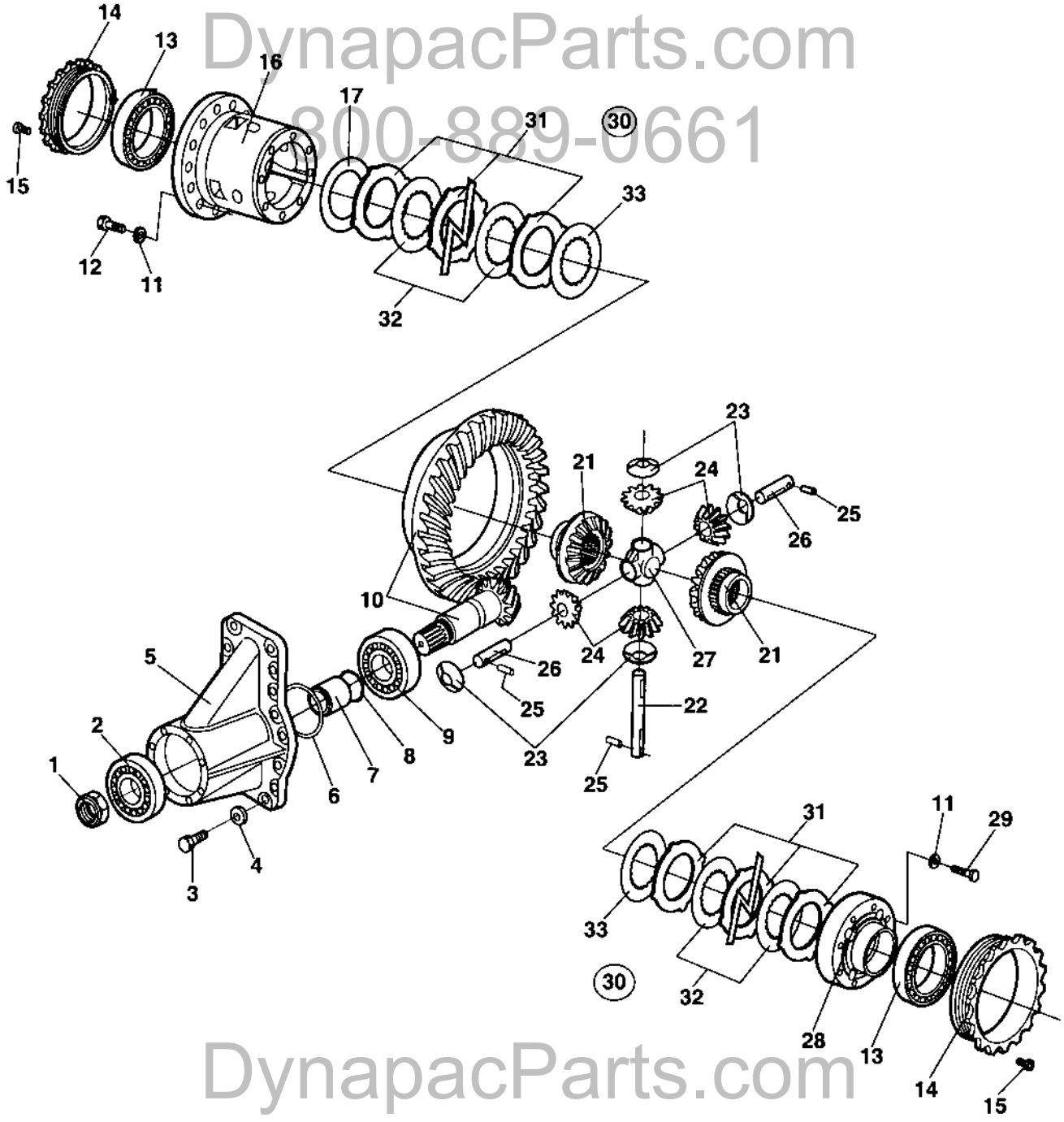

DynapacParts.com
800-889-0661
DynapacParts.com
800-889-0661

Differential with limited slip

Ref. No.	Part No.	Rem.	Qty	Description		Code
1	929638		1	Nut		
2	909574		1	Roller bearing		
3	939257		16	Bolt		
4	909572		16	Spring washer		
5	908485		1	Housing		
6	909568		1	Shim	0,10mm	
	909569		1	Shim	0,20mm	
	909570		1	Shim	0,50mm	
	939258		1	Shim	0,15mm	
7	909567		1	Spacer		
8	939259		1	Shim	0,15mm	
	909580		1	Shim	0,20mm	
	909576		1	Shim	0,30mm	
	929644		1	Shim	0,40mm	
	939260		1	Shim	0,50mm	
9	909581		1	Roller bearing		
10	212553		1	Bevel gear set		
11	929628		16	Washer		
12	929629		16	Screw		
13	923342		1	Bearing		
14	939261		2	Nut		
15	938989		2	Screw		
16	909550		1	Differential carrier		
17	909551		1	Shim	0,30mm	
	909552		1	Shim	0,40mm	
	909553		1	Shim	0,10mm	
21	909558		2	Differential gear		
22	909566		1	Shaft		
23	909559		4	Friction washer		
24	939262		4	Differential pinion		
25	909561		3	Rolled pin		
26	909560		2	Shaft		
27	909565		1	Shaft retainer		
28	909562		1	Differential carrier cover		
29	909563		8	Screw		
30	935644		2	Disc kit		D
31			10	.Limited slip disc		D
32			8	.Limited slip disc		D
33			2	.Limited slip disc		D

DynapacParts.com
800-889-0661

DynapacParts.com
800-889-0661

Differential housing and brakes

17670

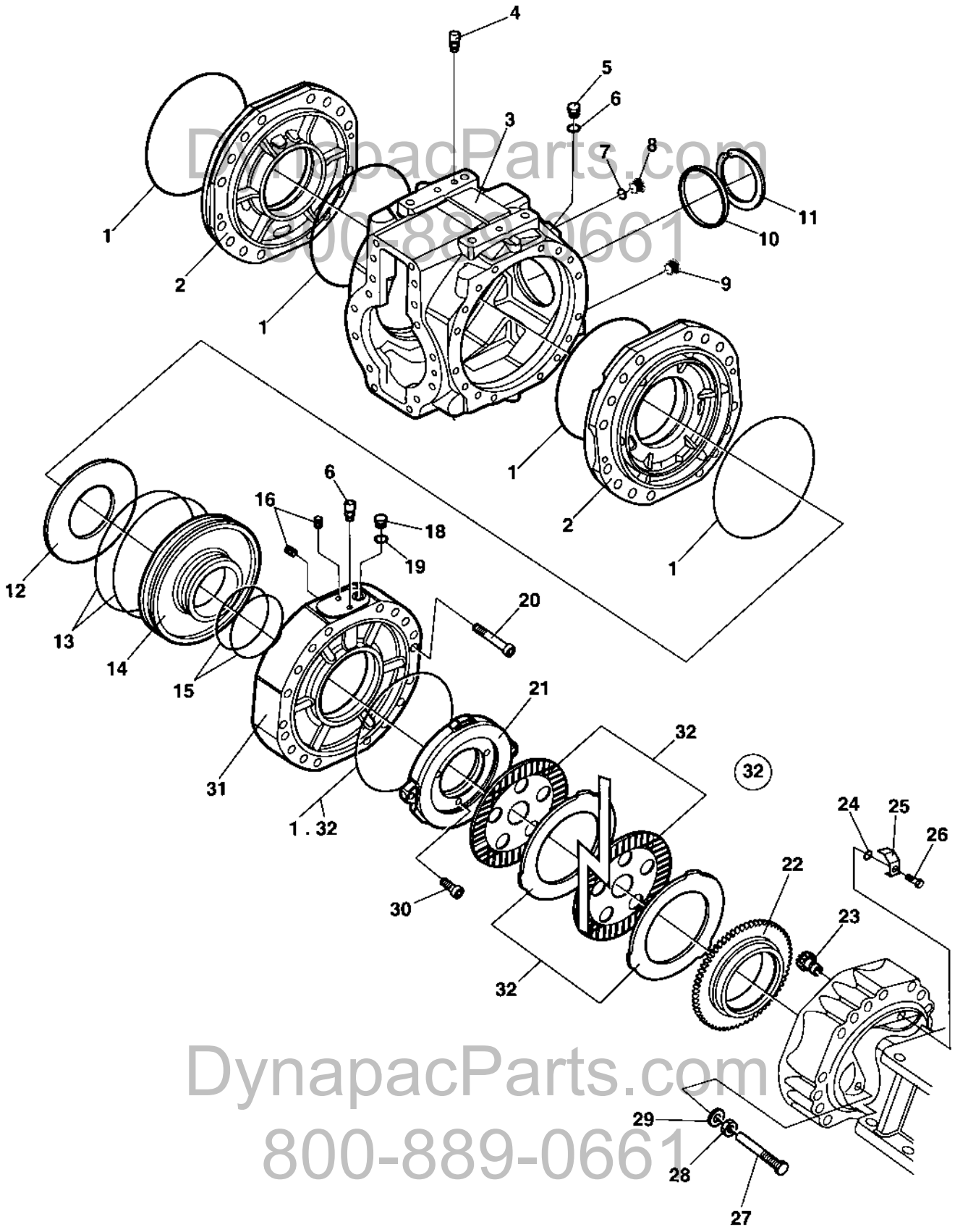

DynapacParts.com
800-889-0661

Differential housing and brakes

Ref. No.	Part No.	Rem.	Qty	Description	Code
1	909609		6	O-ring	D
2	939255		2	Cover	
3	939256		1	Housing	
4	938984		1	Vent nipple	
5	909544		2	Screw	
6	938983		2	Sealing washer	
7	909607		1	Seal	D
8	909596		1	Plug	
9	926810		1	Magnetic plug	
10	938296		1	Plug	
11	929617		1	Lock ring	
12	909616		2	Spring	
13	909618		4	O-ring	D
14	939280		2	Piston	
15	909619		4	O-ring	D
16	939281		4	Bolt	
17	938984		2	Vent nipple	
18	939282		2	Bolt	
19	939036		2	Sealing washer	
20	939035		4	Screw	
21	939283		2	Disc	
22	939285		2	Ring	
23	909622		2	Pinion	
24	900966		2	O-ring	D
25	939286		2	Lock plate	
26	909624		2	Screw	
27	909626		4	Bolt	
28	900957		4	Nut	
29	926847		4	Sealing washer	
30	939026		6	Screw	
31	939287		2	Cover	
32	939284		2	Brake disc kit	
			12	.Brake disc	
			12	.Brake disc	
	909609		2	.O-ring	D

DynapacParts.com
800-889-0661

DynapacParts.com
800-889-0661

Planet gear

17673

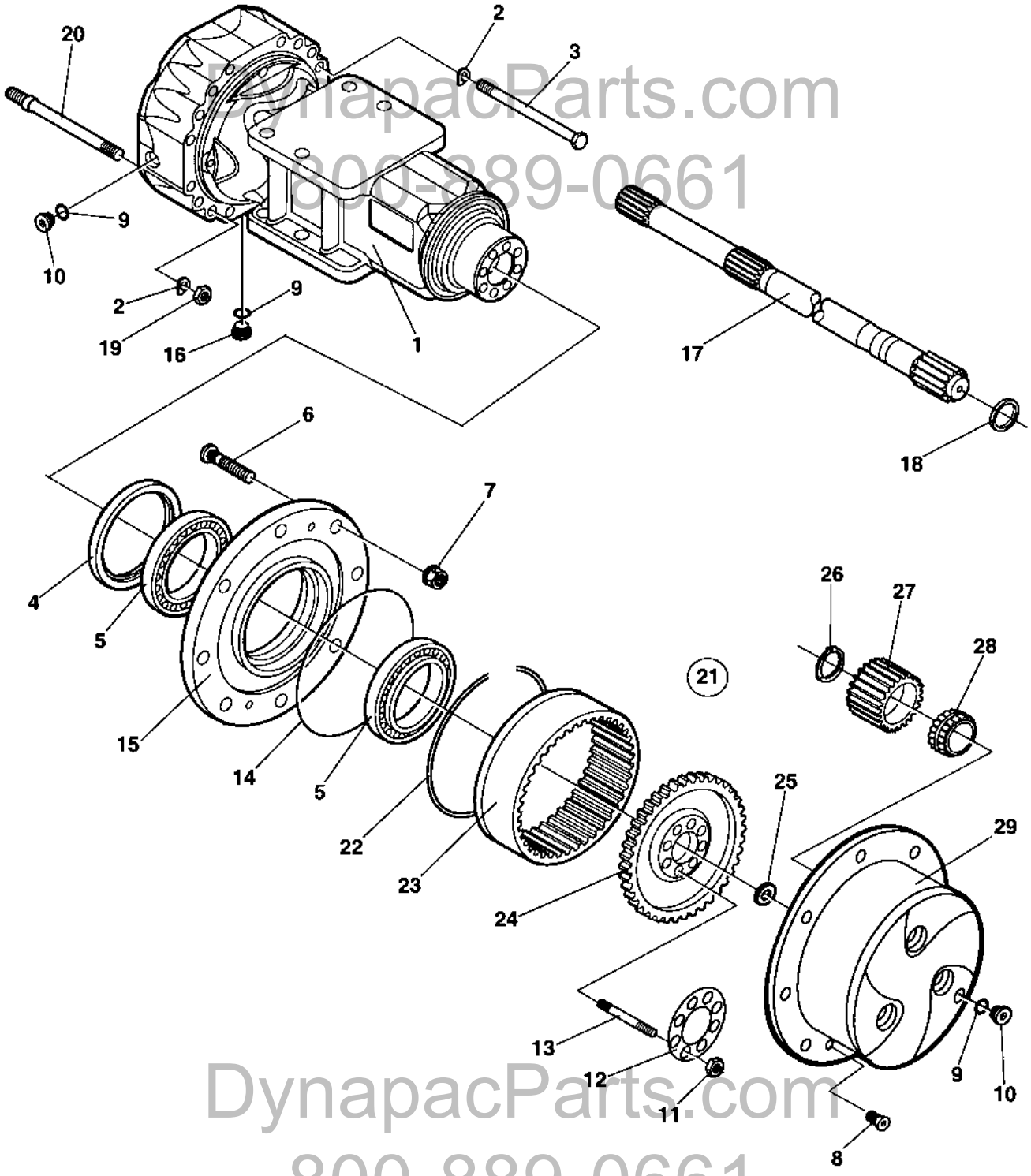

DynapacParts.com
800-889-0661
DynapacParts.com
800-889-0661

Planet gear

Ref. No.	Part No.	Rem.	Qty	Description	Code
1	939263		2	Axle case	
2	939003		32	Spring washer	
3	939264		24	Bolt	
4	939265		2	Seal	
5	939266		4	Bearing	
6	926781		20	Wheel screw	
7	901987		20	Wheel nut	
8	939015		4	Screw	
9	330333		6	Copper washer	D
10	909596		4	Plug	
11	939016		20	Nut	
12	939275		2	Lock plate	
13	939017		20	Stud	
14	929612		2	O-ring	
15	939276		2	Wheel hub	
16	938985		2	Magnetic plug	
17	939277		2	Half shaft	
18	909586		2	Seal	D
19	939019		8	Nut	
20	939278		8	Stud	
21	939279		2	Planet gear carrier Cpl.	
22	939267		2	.Circlip	
23	939268		2	.Ring gear	
24	939269		2	.Ring gear support	
25	939270		2	.Washer	
26	939271		6	.Seal	
27	939272		6	.Planet gear	
28	939273		6	.Bearing	
29	939274		2	.Planet gear carrier	

DynapacParts.com
800-889-0661

DynapacParts.com
800-889-0661

383856 Rear axle No-Spin, Option

17671

DynapacParts.com
800-889-0661

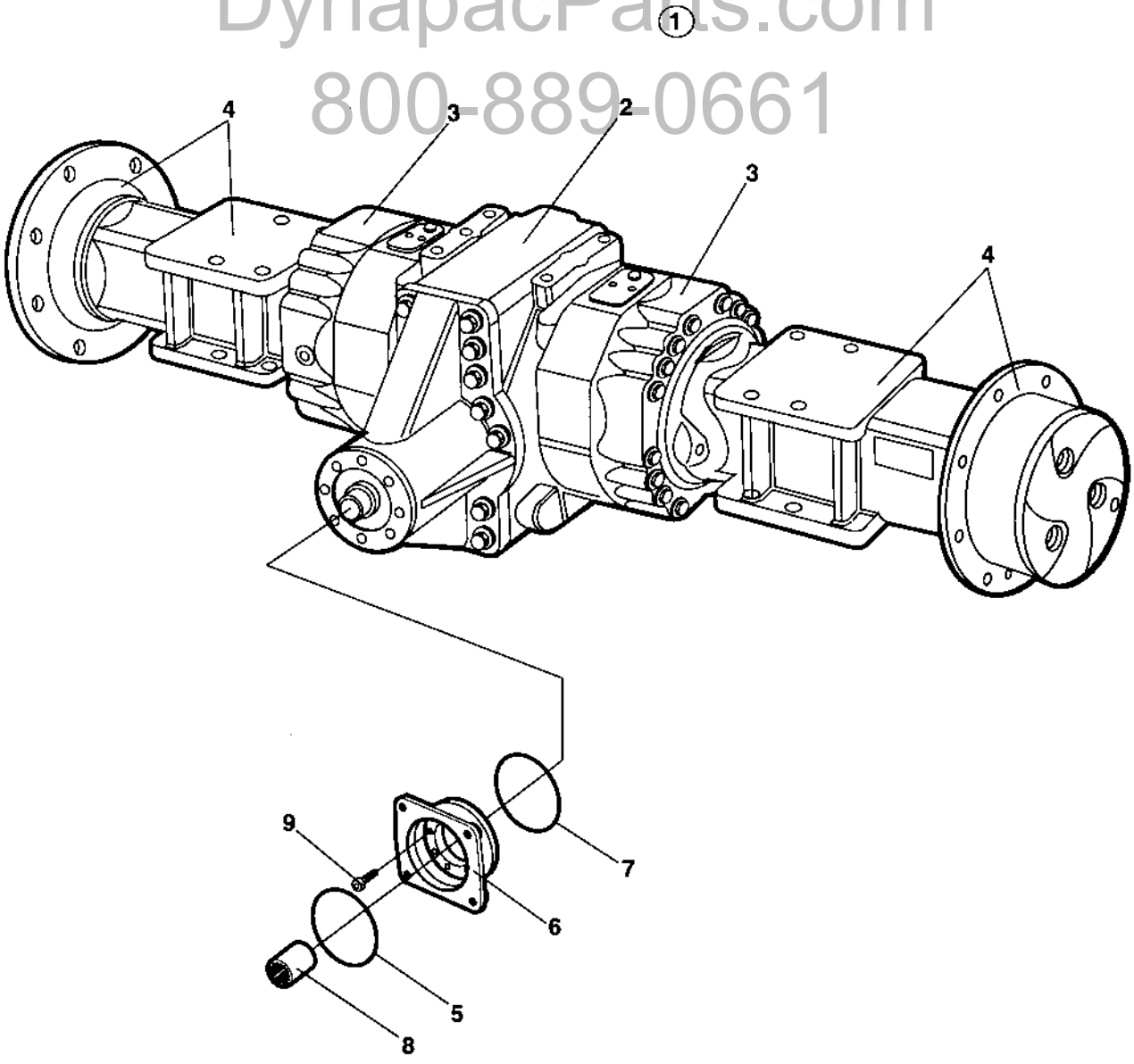

DynapacParts.com
800-889-0661

383856 Rear axle No-Spin, Option

Ref. No.	Part No.	Rem.	Qty	Description		Code
1			1	Rear axle		
2			1	.Differential (Page 100)	with No-Spin	
3			2	.Differential housing and brakes (Page 94)		
4			2	.Planet gear (Page 102)		
5	909584		1	O-ring		D
6	909583		1	Flange		
7	929648		1	O-ring		D
8	901834		1	Splined sleeve		
9	909582		8	Screw		

DynapacParts.com
800-889-0661

DynapacParts.com
800-889-0661

Differential with No-Spin

17689

DynapacParts.com
800-889-0661

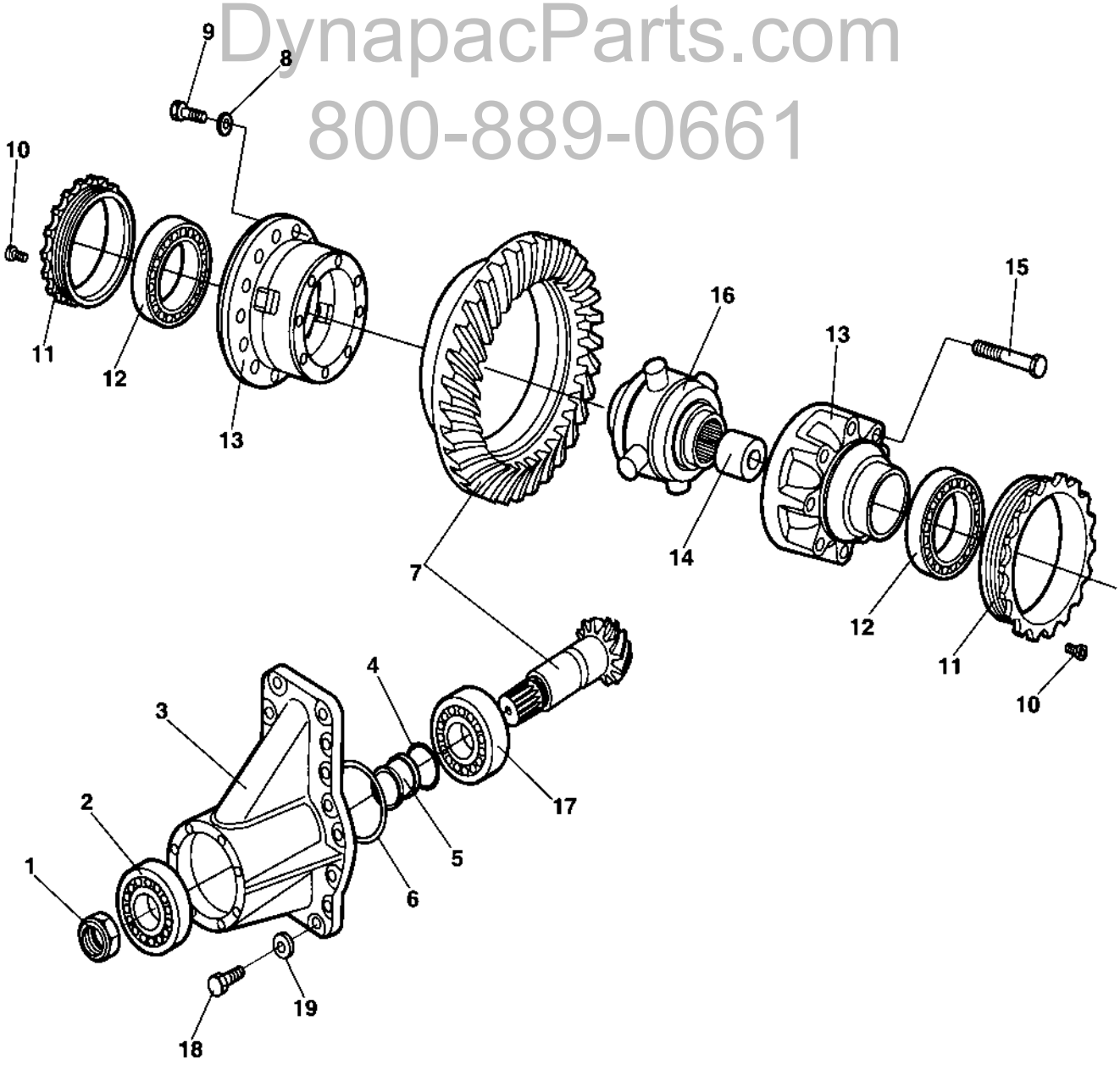

DynapacParts.com
800-889-0661

Differential with No-Spin

Ref. No.	Part No.	Rem.	Qty	Description		Code
1	929638		1	Nut		
2	909574		1	Roller bearing		
3	908485		1	Housing		
4	939259		1	Shim	0,15mm	
	909580		1	Shim	0,20mm	
	909576		1	Shim	0,30mm	
	929644		1	Shim	0,40mm	
	939260		1	Shim	0,50mm	
5	909567		1	Spacer		
6	909568		1	Shim	0,10mm	
	909569		1	Shim	0,20mm	
	909570		1	Shim	0,50mm	
	939258		1	Shim	0,15mm	
7	212553		1	Bevel gear set		
8	929628		16	Washer		
9	929629		16	Screw		
10	938989		2	Screw		
11	939261		2	Nut		
12	923342		1	Bearing		
13	929630		1	Differential case		
14	929631		1	Spacer		
15	929625		8	Screw		
16	929626		1	Non-spin unit		
17	909581		1	Roller bearing		
18	939257		16	Bolt		
19	909572		16	Spring washer		

DynapacParts.com
800-889-0661

DynapacParts.com
800-889-0661

Planet gear

17673

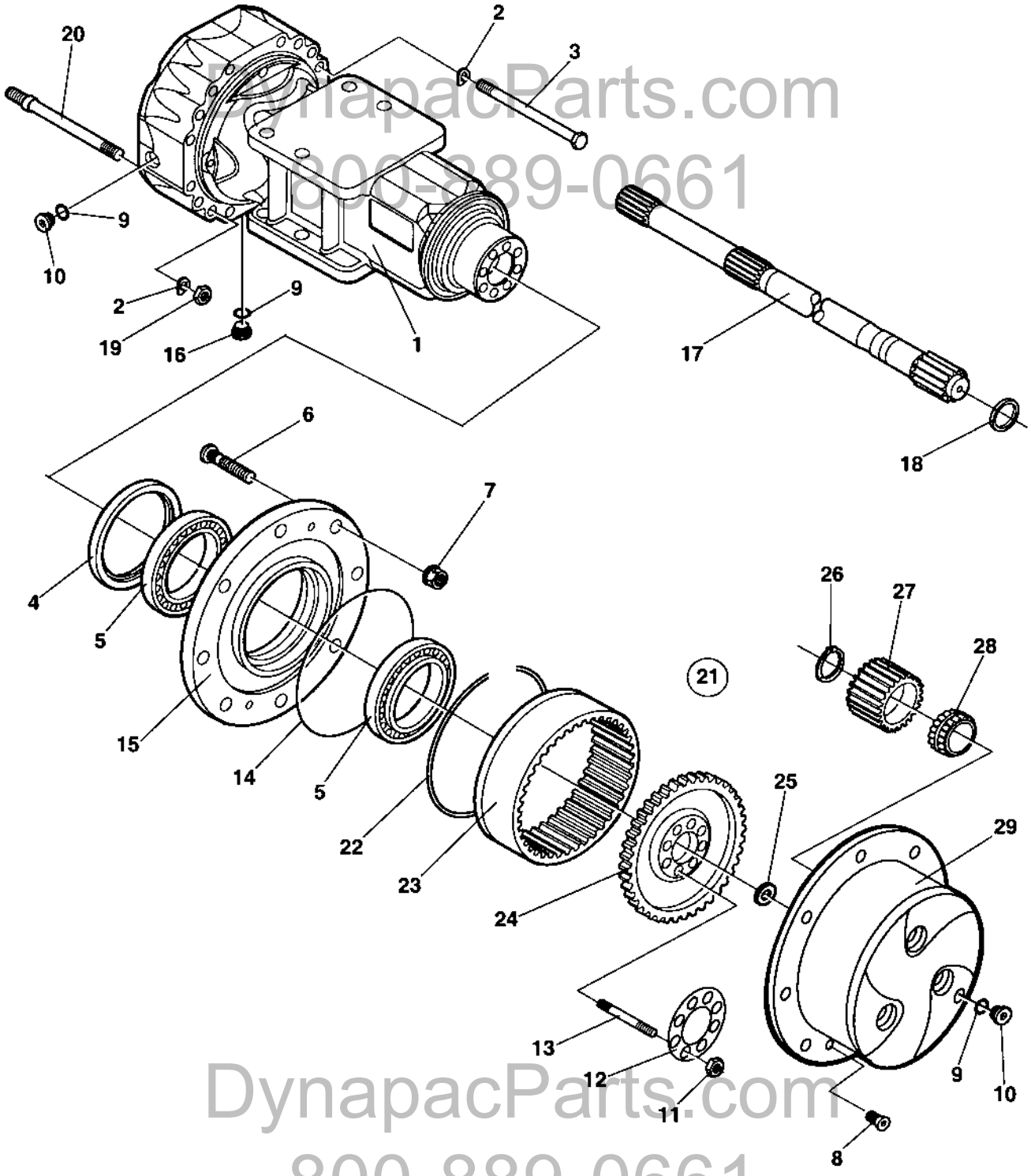

DynapacParts.com
800-889-0661
DynapacParts.com
800-889-0661

Planet gear

Ref. No.	Part No.	Rem.	Qty	Description	Code
1	939263		2	Axle case	
2	939003		32	Spring washer	
3	939264		24	Bolt	
4	939265		2	Seal	
5	939266		4	Bearing	
6	926781		20	Wheel screw	
7	901987		20	Wheel nut	
8	939015		4	Screw	
9	330333		6	Copper washer	D
10	909596		4	Plug	
11	939016		20	Nut	
12	939275		2	Lock plate	
13	939017		20	Stud	
14	929612		2	O-ring	
15	939276		2	Wheel hub	
16	938985		2	Magnetic plug	
17	939277		2	Half shaft	
18	909586		2	Seal	D
19	939019		8	Nut	
20	939278		8	Stud	
21	939351		2	Planet gear carrier Cpl.	
22	939267		2	.Circlip	
23	939268		2	.Ring gear	
24	939269		2	.Ring gear support	
25	939270		2	.Washer	
26	939271		8	.Seal	
27	939272		8	.Planet gear	
28	939273		8	.Bearing	
29	939349		2	.Planet gear carrier	

DynapacParts.com
800-889-0661

DynapacParts.com
800-889-0661

DynapacParts.com
800-889-0661

DynapacParts.com
800-889-0661

Hydraulic system

Ref. No.	Part No.	Rem.	Qty	Description	Code
10				Propulsion system, Front (Page 106)	
13	371509			Propulsion motor (Page 108)	C
15				Propulsion system, Rear (Page 110)	
17	374137			Propulsion motor Up to 68X10373 (Page 114)	C
18	373361			Propulsion motor From 68X10374 (Page 118)	C
20				Vibration system (Page 122)	
25	380145			Hydraulic motor, vibration (Page 124)	C
30				Steering system (Page 126)	
35	375031			Steering cylinder Up to 68X10966 (Page 130)	C
37	372424			Pilot valve, steering (Page 132)	C
40				Brake system (Page 134)	
45				Hydraulic oil tank (Page 136)	
47				Hydraulic oil tank (Page 138)	
50				Central test panel hydraulic (Page 140)	
60				Dual speed drum drive (Page 142) Option	

DynapacParts.com
800-889-0661

DynapacParts.com
800-889-0661

Propulsion system, Front

16613

DynapacParts.com
800-889-0661

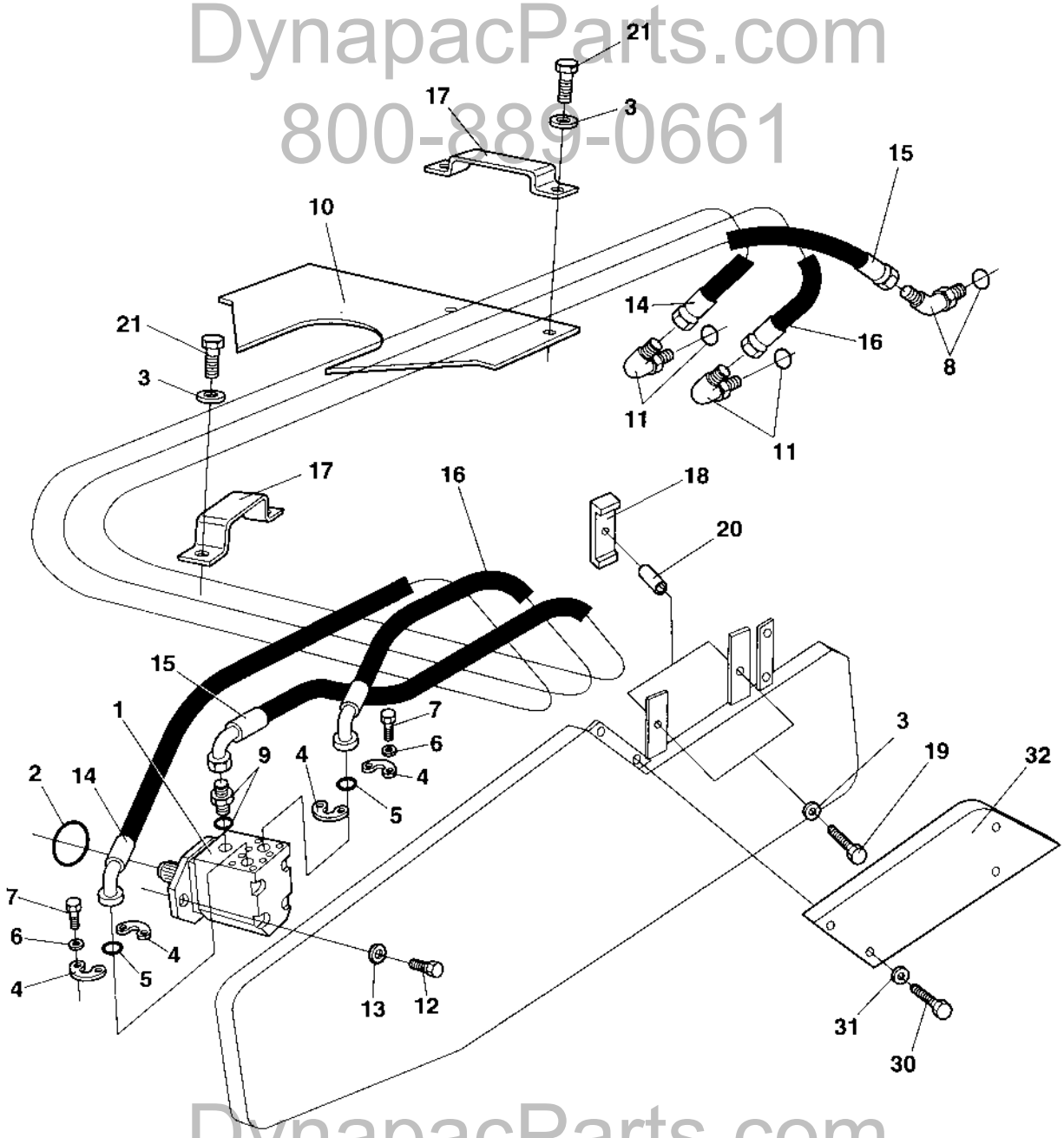

DynapacParts.com
800-889-0661

Propulsion system, Front

Ref. No.	Part No.	Rem.	Qty	Description		Code
1	371509		1	Propulsion motor (Page 108)		C
2	904058		1	O-ring		
3	904230		6	Washer		
4	923384		4	Flange half		
5	904005		2	O-ring		
6	904638		8	Washer	12x22x2	
7	502132		8	Screw	UNC 7/16" x 22	
8	334132		1	Elbow 45, O-ring		
9	334138		1	Adapter		
10	372235		1	Hose guard		
11	813499		2	Elbow 90, O-ring		
12	500101		2	Screw	M20x50	
13	903290		2	Washer	21x36x6	
14	483119		1	Hydraulic hose		
15	483190		1	Hydraulic hose		
16	483120		1	Hydraulic hose		
17	373016		2	Hose clamp		
18	373270		2	Hose clamp		
19	500032		2	Screw	M10 x 55	
20	373423		2	Spacer		
21	500029		4	Screw		
30	500019		4	Screw		
31	904229		4	Washer		
32	372080		1	Cover		

DynapacParts.com
800-889-0661

DynapacParts.com
800-889-0661

371509 Propulsion motor

16542

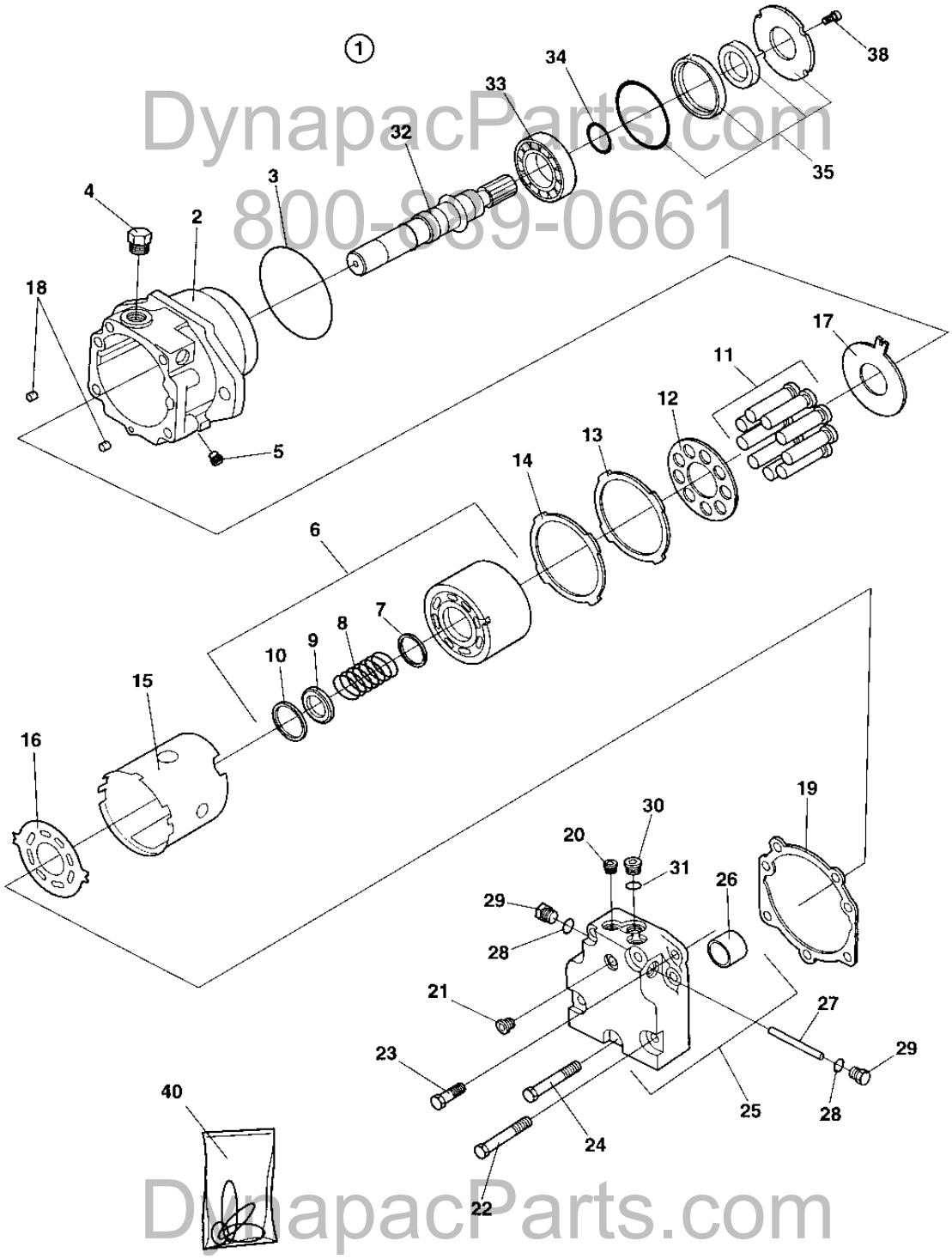

DynapacParts.com
800-889-0661
DynapacParts.com
800-889-0661

371509 Propulsion motor

Ref. No.	Part No.	Rem.	Qty	Description	Code
1			1	Hydraulic motor, Cpl	
2	937274		1	.Housing	
3	937275	1	1	.O-ring	
4	902928		2	.Plug	
	901453	1	2	..O-ring	
5	908432		1	.Plug	
6	937277		1	.Cylinder block, cpl	
7	935619		1	..Spacer	
8	937278		1	..Spring	
9	935621		1	..Spring retainer	
10	935622		1	..Ring retainer	
11	903570		9	.Piston	D
12	903571		1	.Pressure plate	D
13	935623		1	.Retainer guide	
14	935624		1	.Shim	
15	935625		1	.Holder	
16	935626		1	.Valve plate	
17	937279		1	.Thrust plate	
18	813822		2	.Pin	
19	935629	1	1	.Gasket	D
20	358388		2	.Plug	
21	908432		1	.Plug	
22	909252		4	.Screw	
23	909253		2	.Screw	
24	935630		1	.Screw	
25	937280		1	.End cap, cpl	
26	903053		1	..Bushing	
27	909255		1	.Spool	
28	923087	1	2	.O-ring	D
29	358388		2	.Plug	
30	935853		1	.Plug	
31	926658	1	1	.O-ring	D
32	935631		1	.Shaft	
33	901465		1	.Bearing	
34	901467		1	.Ring	
35	950368		1	.Shaft seal kit	
38	908773		3	.Screw	
40	937283		1	Seal kit	

1) Includes in item 40, Seal kit

DynapacParts.com
800-889-0661

DynapacParts.com
800-889-0661

Propulsion system, Rear

17730

DynapacParts.com
800-889-0661

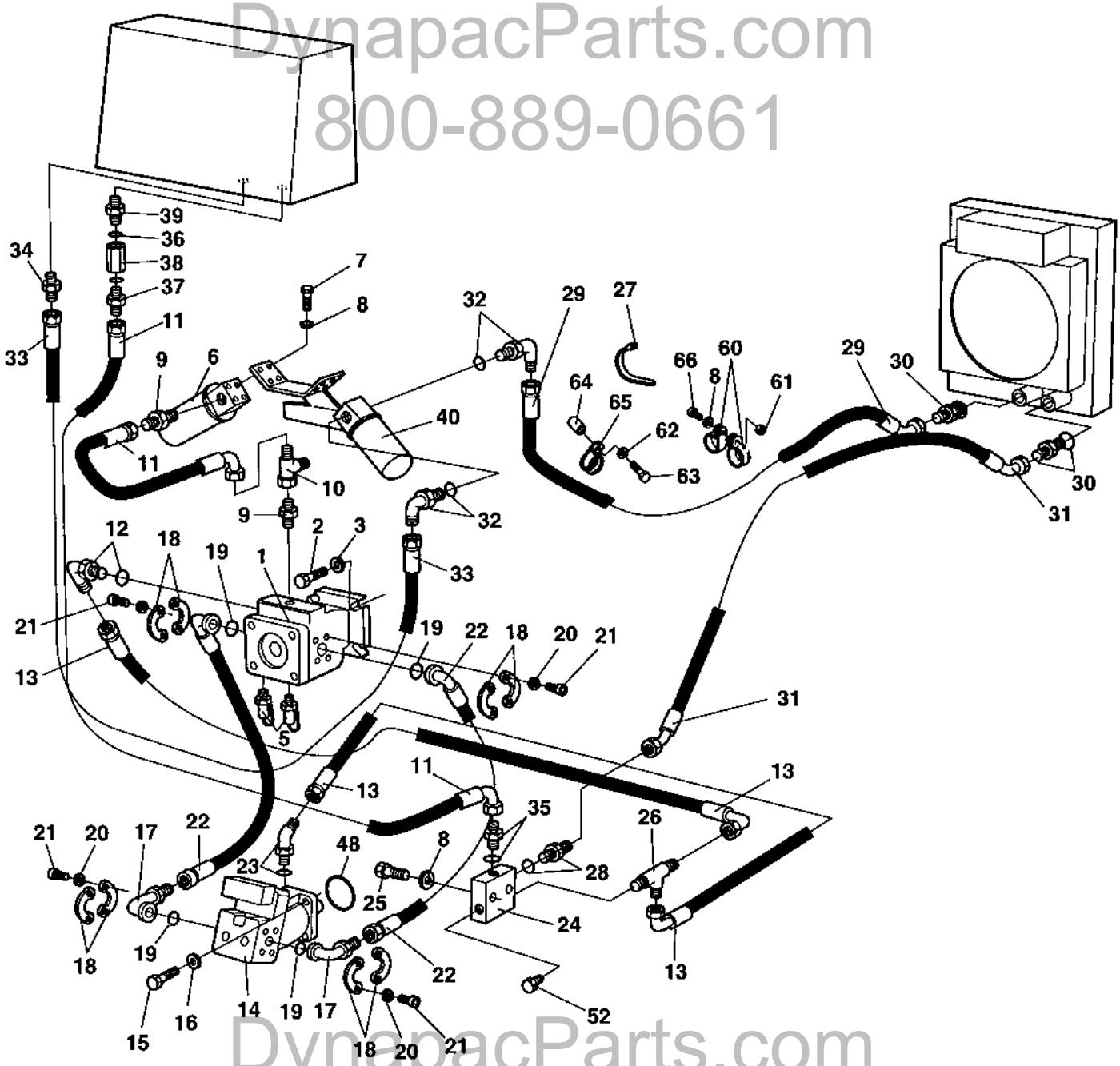

DynapacParts.com
800-889-0661

Propulsion system, Rear

Ref. No.	Part No.	Rem.	Qty	Description		Code
1	380830		1	Propulsion pump		C
	938170		1	.Control valve, cpl		
	938252		1	..Solenoid valve		
	938253		1	..Neutral start switch		
2	500037		4	Screw Up to 68X10994		
	500046		4	Screw From 68X10995		
3	615045		4	Conical spring washer Up to 68X10994		
	904213		4	Washer From 68X10995		
5	900229		2	Measuring nipple		D
6	359550	D	1	Hydraulic oil filter, cpl		
	359551		1	.Filter head		
	359552		1	.Cleaning filter element	Maximum 50 hours use	
	372229	E	1	Hydraulic oil filter element		A
7	500028		8	Screw		
8	904230		10	Washer		
9	334468		2	Adapter		
10	234243		1	T-connector		
11	482182		2	Hydraulic hose		D
12	813499		1	Elbow 90, O-ring		
13	482391		2	Hydraulic hose		
14	374137		1	Propulsion motor Up to 68X10373 (Page 114)		C
	373361		1	Propulsion motor From 68X10374 (Page 118)		C
15	500263		4	Screw	M18x60	
16	604012		4	Washer Up to 68X10994	19,3x31,3x4	
	904793		4	Washer From 68X10995	19x34x3	
17	900604		2	Adapter		
18	923384		8	Flange half		
19	904005		4	O-ring		
20	904638		16	Washer	12x22x2	
21	502132		16	Screw	UNC 7/16" x 22	
22	483033		2	Hydraulic hose		
23	334132		1	Elbow 45, O-ring		
24	345243		1	Connection block		
25	500109		2	Screw	M10-1,5x65 8,8	
26	234875		1	Tee-connector o-ring		
27	313102		N	Cable ties		
28	334140		1	Adapter		
29	483527		1	Hydraulic hose		
30	234958		2	Connector		
31	483616		1	Hydraulic hose		
32	334163		2	Adapter		
33	483037		1	Hydraulic hose		
34	234909		1	Straight connector		
35	334138		1	Adapter		
36	162008		1	Seal washer		
37	923371		1	Adapter		
38	374059		1	Check valve		
39	904282		1	Adapter		
40	372435	C	1	Hydraulic oil filter, cpl		
	372436		1	.Filter head		
	359552		1	.Cleaning filter element	Maximum 50 hours use	
	372229	E	1	Hydraulic oil filter element		A
45	372235		1	Hose guard		
48	902581		1	O-ring		D
52	232222		1	Plug		
60	923008		2	Clamp		
61	902287		1	Nut		

C) Return
D) Suction
E) Spare part for ordinary service

DynapacParts.com
800-889-0661

Propulsion system, Rear

17730

DynapacParts.com
800-889-0661

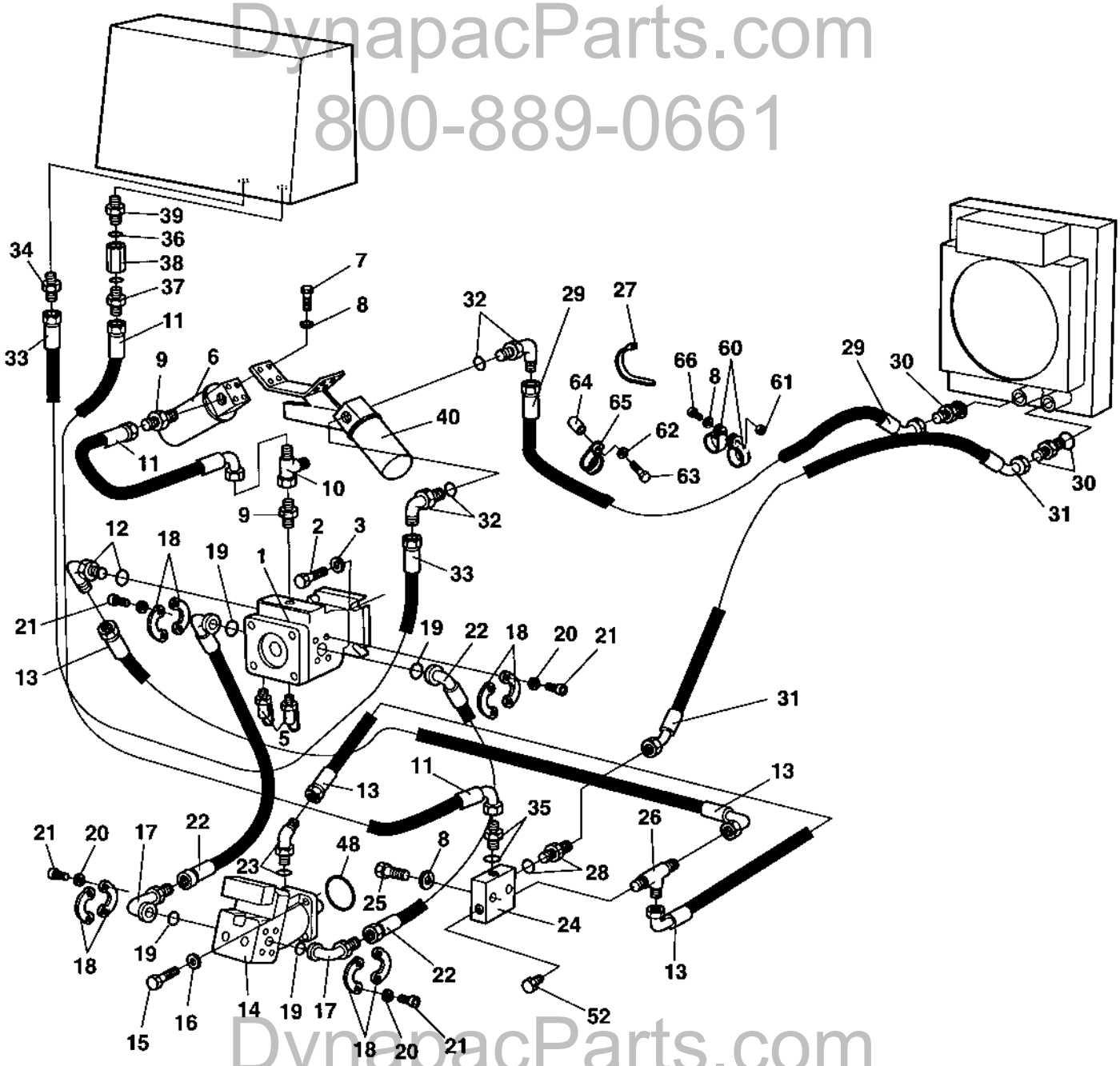

DynapacParts.com
800-889-0661

Propulsion system, Rear

Ref. No.	Part No.	Rem.	Qty	Description	Code
62	904231		1	Washer	
63	500013		1	Screw	
64	387698		1	Spacer sleeve	
65	791513		1	Pipe clamp	
66	500031		1	Screw	

DynapacParts.com
800-889-0661

DynapacParts.com
800-889-0661

374137 Propulsion motor

16523

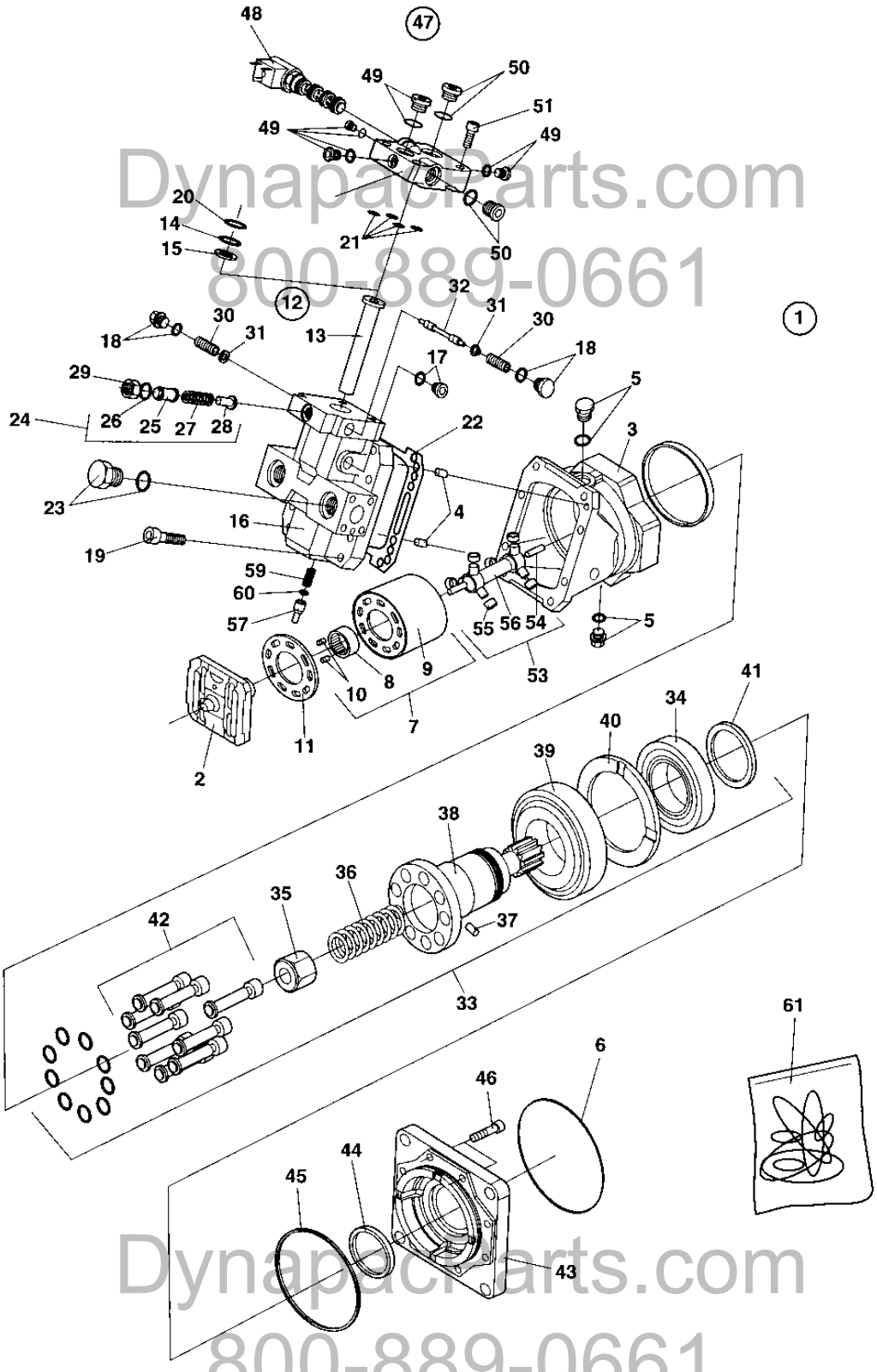

DynapacParts.com
800-889-0661
DynapacParts.com
800-889-0661

374137 Propulsion motor

Ref. No.	Part No.	Rem.	Qty	Description		Code
1			1	Hydraulic motor, Cpl		
2	935521		1	.Valve segment		
3	902926		1	.Housing		
4	813822		2	.Pin		
5	902928		2	.Plug		
	901453	1	2	..O-ring		
6	902581	1	1	.O-ring		D
7	902929		1	.Cylinder block		
8			1	..Bush		
9			1	..Cylinder block		
10			2	..Pin		
11	902930		1	.Bearing plate		D
12	935527		1	.Piston assembly		
13	935526		1	..Piston		
14	935525	1	1	..O-ring		D
15	935524	1	1	..Seal plug		D
16	935530		1	.End cap		
17	908432		1	.Plug		
18	935741		2	.Plug, cpl		
19	902944		8	.Screw		
20	935531	1	1	.O-ring		D
21	908443	1	5	.Rect. seal		
22	908427	1	1	.Gasket		D
23	902928		2	.Plug		
	901453	1	2	..O-ring		
24	936589		1	.Loop Flushing assy.		
25			1	..Adjusting screw		
26	926658	1	1	..O-ring		D
27	902957		1	..Spring		
28	901464		1	..Valve cone		D
29	902959		1	..Nut		
30	935749		2	.Spring		
31	935750		2	.Spring retainer		
32	935533		1	.Spool		
33	902960		1	.Shaft, cpl		
34			1	..Bearing		
35			1	..Spring guide		
36			1	..Spring		
37			1	..Pin		
38			1	..Shaft		
39			1	..Bearing		
40			1	..Spacer		
41			1	..Nut		
42	936592		9	..Piston assembly		
43	902961		1	.Flange		
44	935536		1	.Shaft seal	55x75x12	D
	945757	1	1	.Shaft seal	55x70x7	D
45	935664	1	1	.O-ring		D
46	936591		8	.Screw		
47	935543		1	.Electric hydraulic control		
48	908435		1	..Solenoid valve assy		
49	908426		4	..Plug, cpl		
50	908432		2	..Plug		
51	935544		4	..Screw		
52	935545		1	..Valve housing		
53	902984		1	.Shaft, cpl		
54			2	..Pin		
55			6	..Roller		
56			1	..Shaft		

1) Includes in Seal kit item 61

DynapacParts.com
800-889-0661
DynapacParts.com
800-889-0661

374137 Propulsion motor

16523

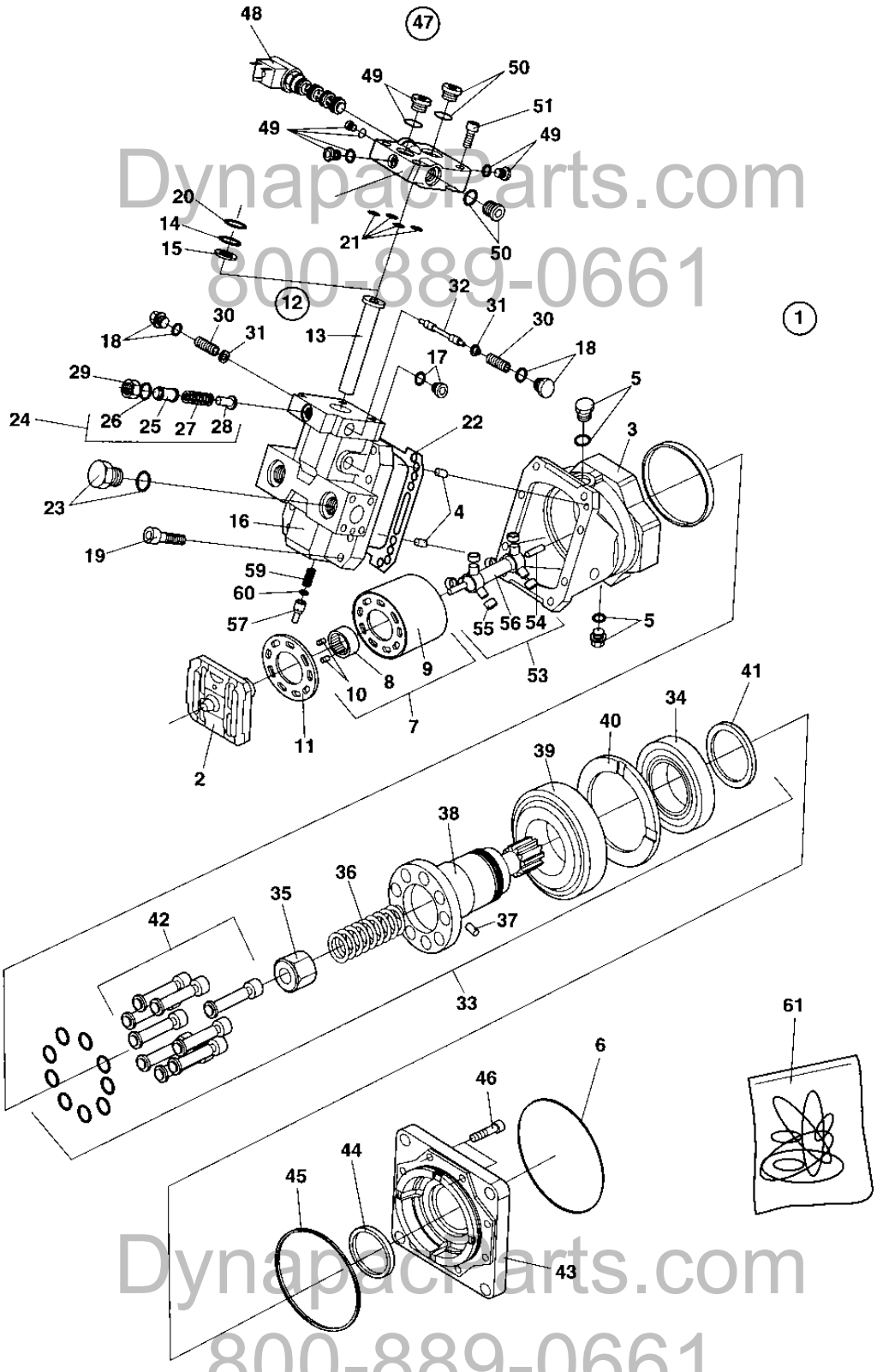

DynapacParts.com
800-889-0661
DynapacParts.com
800-889-0661

374137 Propulsion motor

Ref. No.	Part No.	Rem.	Qty	Description	Code
57	902996		1	.Cap	
58	936593		2	.Orifice	
59	902995		1	.Headless screw	
60	909525	1	1	.Nut	
61	935520		1	Seal kit	D

1) Includes in Seal kit item 61

DynapacParts.com
800-889-0661

DynapacParts.com
800-889-0661

373361 Propulsion motor

16654

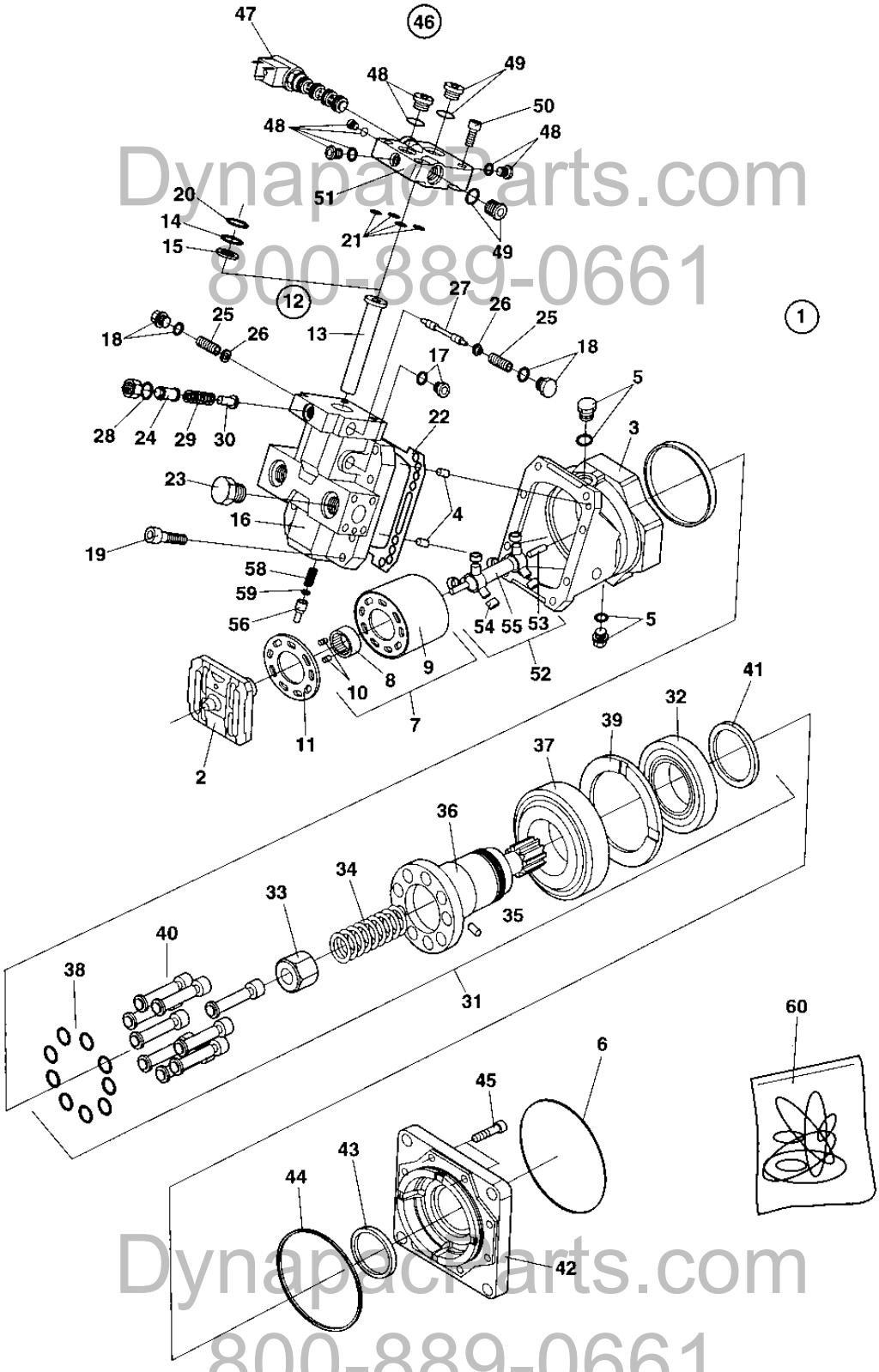

DynapacParts.com
800-889-0661
DynapacParts.com
800-889-0661

373361 Propulsion motor

Ref. No.	Part No.	Rem.	Qty	Description		Code
1			1	Hydraulic motor, Cpl		D
2	935521		1	.Valve segment		
3	908422		1	.Housing		
4	813822		2	.Pin		
5	902928		2	.Plug		
	901453	1	2	..O-ring		
6	902581	1	1	.O-ring		D
7	902929		1	.Cylinder block		
8			1	..Bush		
9			1	..Cylinder block		
10			2	..Pin		
11	902930		1	.Bearing plate		D
12	935527		1	.Piston assembly		
13	935526		1	..Piston		
14	935525	1	1	..O-ring		D
15	935524	1	1	..Seal plug		D
16	935530		1	.End cap		
17	908432		1	.Plug		
18	935741		2	.Plug, cpl		
19	902944		8	.Screw		
20	935531	1	1	.O-ring		D
21	908443	1	5	.Rect. seal		
22	908427	1	1	.Gasket		D
23	902928		2	.Plug		
	901453	1	2	..O-ring		
24			1	.Adapter		
25	935749		2	.Spring		
26	935750		2	.Spring retainer		
27	935533		1	.Spool		
28	813618	1	1	.O-ring		D
29			1	.Spring		D
30			1	.Valve cone		D
31	902960		1	.Shaft, cpl		
32			1	..Roller bearing		
33			1	..Spring guide		
34			1	..Spring		
35			1	..Pin		
36			1	..Shaft		
37			1	..Roller bearing		
38			9	..Piston ring		
39			1	..Spacer		
40			9	..Piston		
41			1	..Nut		
42	902961		1	.Flange		
43	935536		1	.Shaft seal	55x75x12	D
	945757	1	1	.Shaft seal	55x70x7	D
44	935664	1	1	.O-ring		D
45	902962		8	.Screw		
46	935543		1	.Electric hydraulic control		
47	908435		1	..Solenoid valve assy		
48	908426		4	..Plug, cpl		
49	908432		2	..Plug		
50	935544		4	..Screw		
51	935545		1	..Valve housing		
52	902984		1	.Shaft, cpl		
53			2	..Pin		
54			6	..Roller		
55			1	..Shaft		
56	902996		1	.Cap		

1) Included in seal kit item 60

DynapacParts.com
800-889-0661
DynapacParts.com
800-889-0661

373361 Propulsion motor

16654

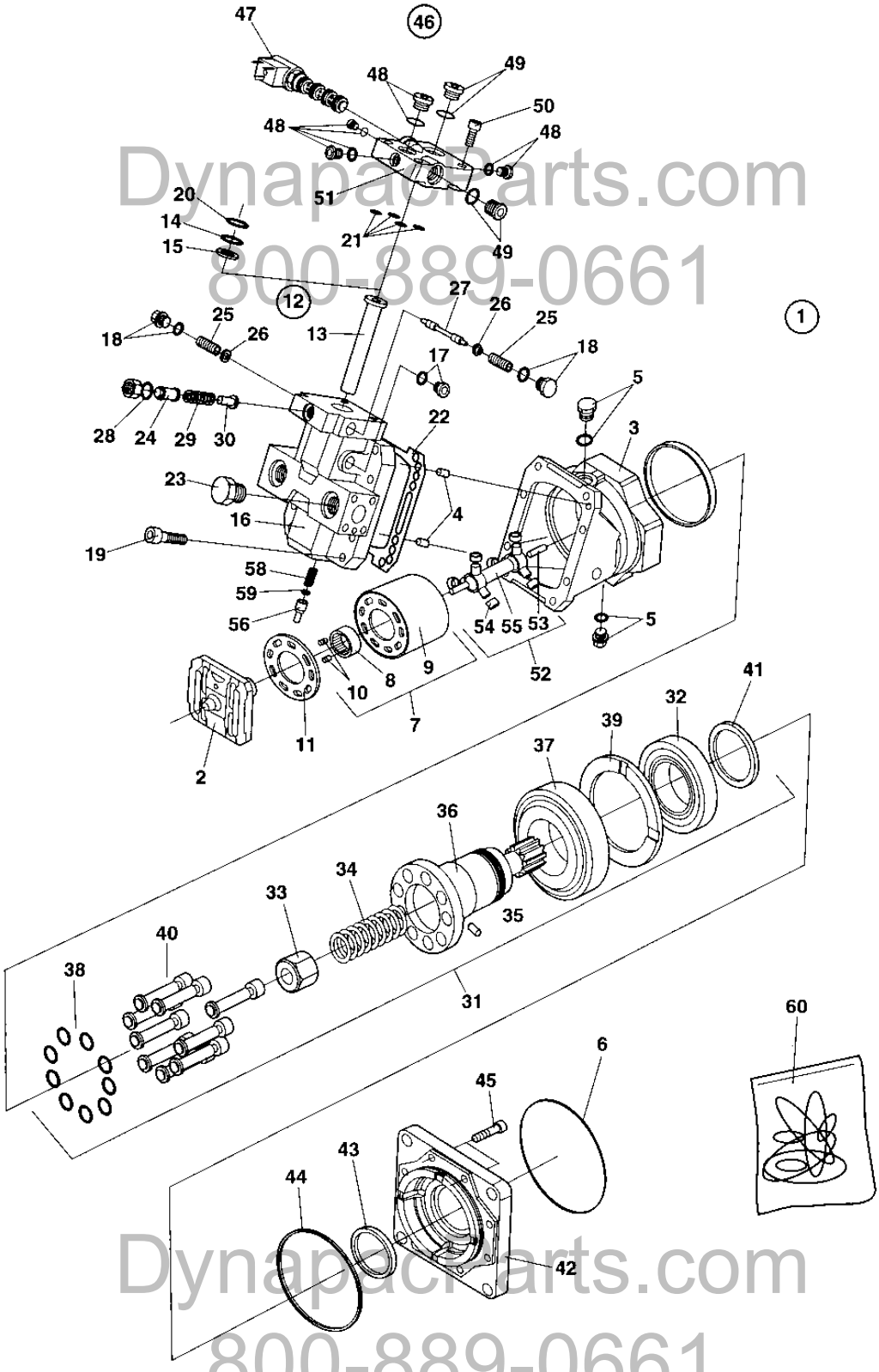

DynapacParts.com
800-889-0661
DynapacParts.com
800-889-0661

373361 Propulsion motor

Ref. No.	Part No.	Rem.	Qty	Description	Code
57	936593		2	.Orifice	
58	937363		1	.Shaft	
59	909525	1	1	.Nut	
60	935520		1	Seal kit	D

1) Included in seal kit item 60

DynapacParts.com
800-889-0661

DynapacParts.com
800-889-0661

Vibration system

16615

DynapacParts.com
800-889-0661

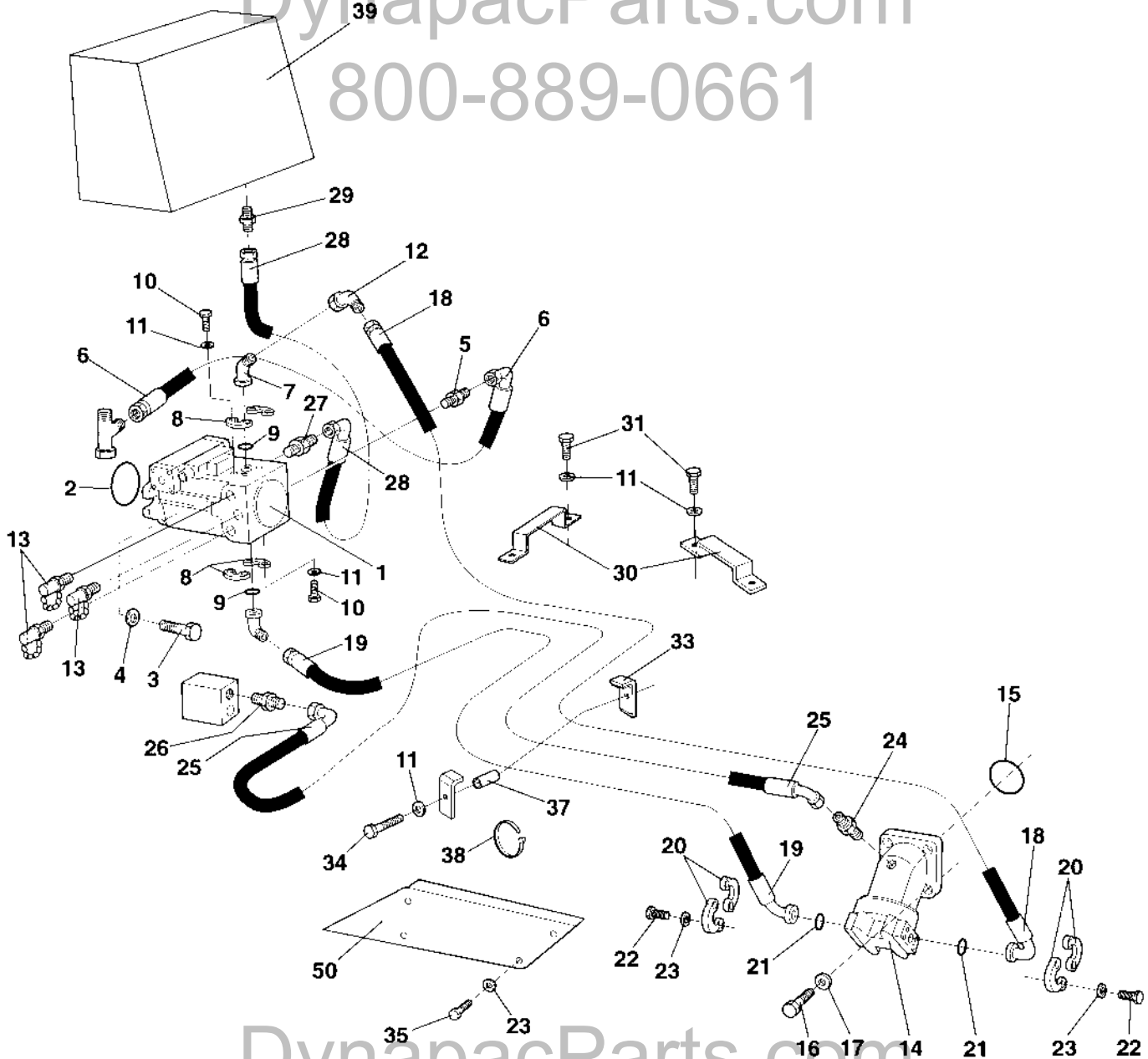

DynapacParts.com
800-889-0661

Vibration system

Ref. No.	Part No.	Rem.	Qty	Description		Code
1	383958		1	Vibration pump		C
2	903877		1	O-ring		
3	502078		2	Screw		
4	904232		2	Washer		
5	234382		1	Adapter		
6	483286		1	Hydraulic hose		
7	904767		2	Flange adapter		
8	929226		4	Flange half		
9	904773		2	O-ring		
10	500030		8	Screw		
11	904230		14	Washer		
12	904781		1	Adapter		
13	901157		3	Measuring nipple		D
14	380145		1	Hydraulic motor, vibration (Page 124)		C
15	160132		1	O-ring	124, 50x3, 00	D
16	500194		4	Screw		
17	904231		4	Washer		
18	483500		1	Hydraulic hose		
19	483501		1	Hydraulic hose		
20	900430		4	Flange half		
21	904774		2	O-ring		
22	502019		8	Screw		
23	904229		12	Washer		
24	334121		1	Straight connector		
25	483031		1	Hydraulic hose		
26	334122		1	Adapter		
27	901155		1	Connector		
28	483024		1	Hydraulic hose		
29	334205		1	Straight connector		
30	373017		2	Hose clamp		
31	500028		4	Screw		
33	373270		2	Hose clamp		
34	500032		2	Screw	M10 x 55	
35	500019		4	Screw		
37	373424		2	Spacer		
38	313102		N	Cable ties		
39			1	Hydraulic oil tank Up to 68X10379 (Page 136)		
			1	Hydraulic oil tank From 68X10380 (Page 138)		
50	372078		1	Cover		

DynapacParts.com
800-889-0661

DynapacParts.com
800-889-0661

380145 Hydraulic motor, vibration

16978

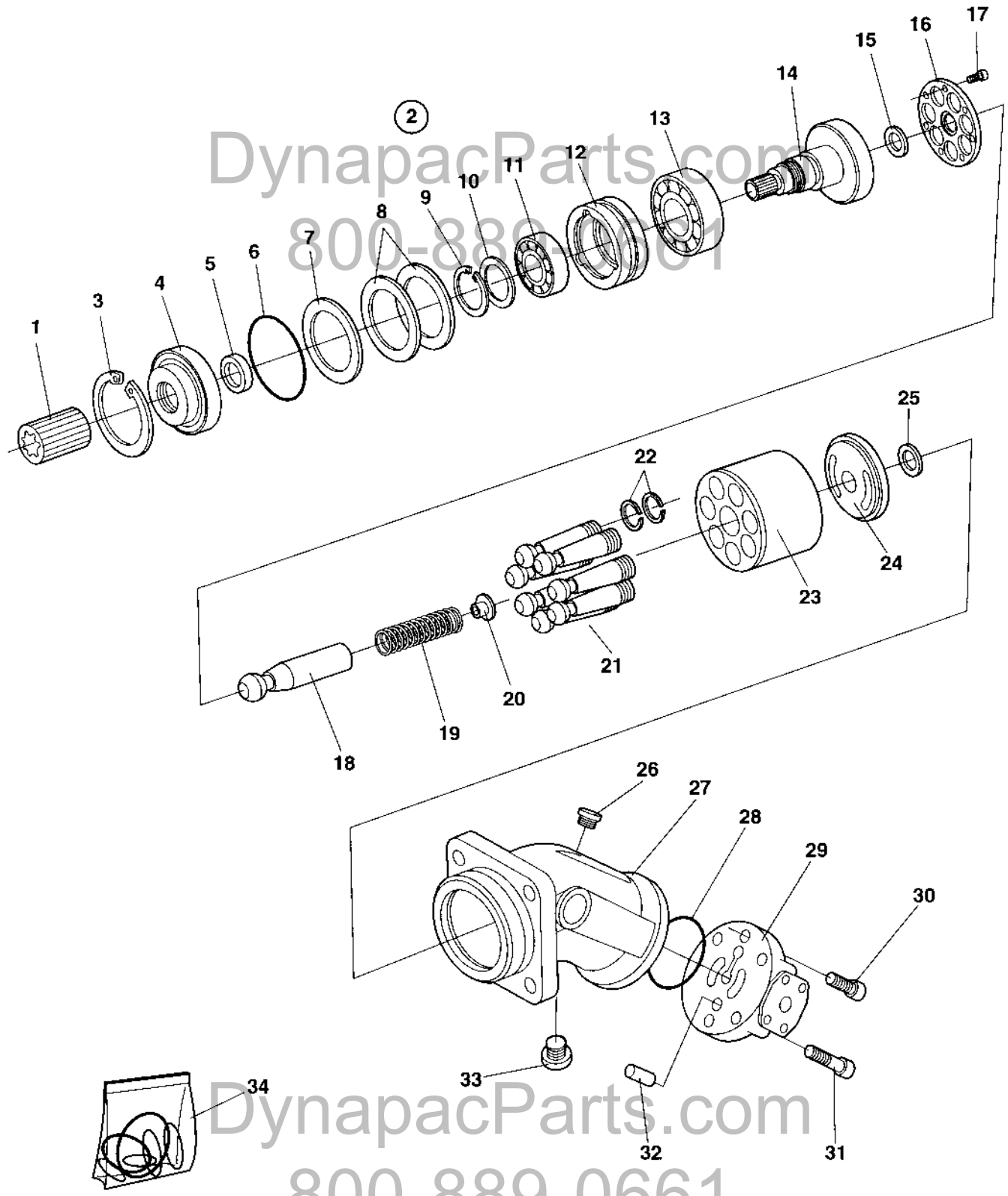

DynapacParts.com
800-889-0661

380145 Hydraulic motor, vibration

Ref. No.	Part No.	Rem.	Qty	Description		Code
			1	Hydraulic motor, vibration		
1	340863		1	.Splined sleeve		D
2	380078		1	.Hydraulic motor, vibration		
3	901387		1	..Snap ring		
4	937261		1	..Cover		
5	937264	1	1	..Seal ring		
6	937265	1	1	..O-ring		
7	901390		1	..Shim	T=0,3 mm	
8	901389		2	..Shim	T=0,1 mm	
9	938042		1	..Retaining ring		
10	938041		1	..Back-up plate		
11	901386		1	..Bearing		
12	937260		1	..Bearing ring		
13	901385		1	..Bearing		
14	938040		1	..Shaft		
15	937262		1	..Washer		
16	903495		1	..Retaining plate		
17	903494		7	..Screw		
18	938030		1	..Pin		
19	938036		1	..Spring		
20	938035		1	..Spring collar		
21	938031		7	..Piston		
	938038		1	...Piston		
22	938039		2	...Sealing ring		
23	938002		1	..Cylinder		
24	901391		1	..Pressure plate		
25	938037		1	..Washer		
26	937995		1	..Screw		
27	937256		1	..Housing		
28	937258	1	1	..O-ring		
29	937257		1	..Plate		
30	902655		2	..Screw		
31	927350		4	..Screw		
32	937993		1	..Pin		
33	937259	1	1	..Screw		
34	937674		1	.Seal kit		

1) Included in seal kit, item 34

DynapacParts.com
800-889-0661

DynapacParts.com
800-889-0661

Steering system

CA302200500030

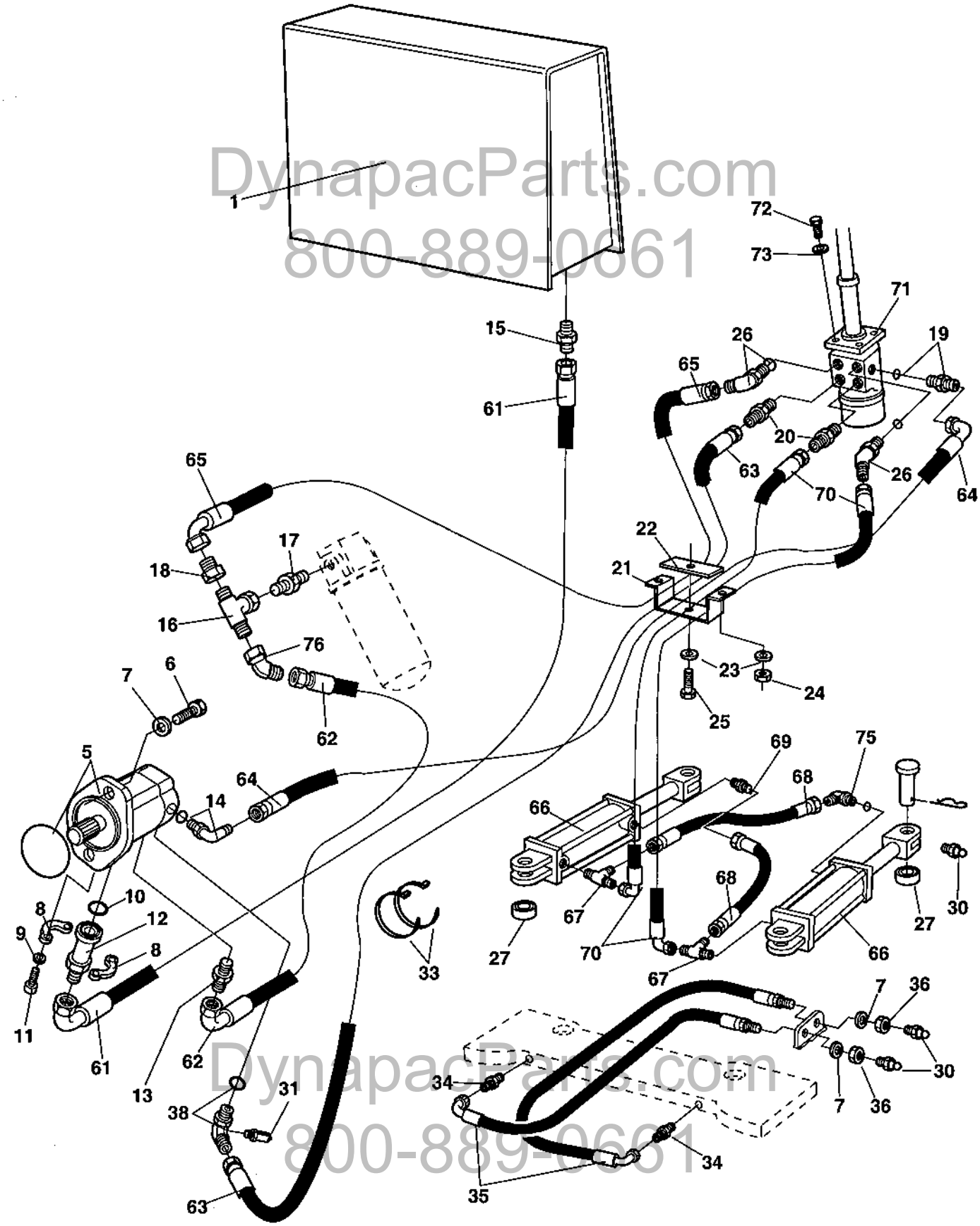

DynapacParts.com
800-889-0661
DynapacParts.com
800-889-0661

Steering system

Ref. No.	Part No.	Rem.	Qty	Description		Code
1			1	Hydraulic oil tank Up to 68X10379 (Page 136)		
			1	Hydraulic oil tank From 68X10380 (Page 138)		
5	387407		1	Steering pump		C
6	500463		2	Screw	M12x30	
7	904638		4	Washer	12x22x2	
8	232097		2	Flange half		D
9	904637		2	Washer		
10	904005		1	O-ring		
11	508029		4	Screw	M10-1,5x30H 8,8	
12	372625		1	Connector		
13	334158		1	Adapter		
14	334203		1	Elbow 90, O-ring		
15	234626		1	Adapter		
16	234900		1	T-connector		
17	334468		1	Adapter		
18	234667		1	Reducer		
19	334143		1	Straight connector		
20	334121		2	Straight connector		
21	372513		1	Hose clamp		
22	372514		1	Hose clamp		
23	904229		3	Washer		
24	586003		2	Lock nut		
25	500023		1	Screw	M8-1,25x40 8,8	
26	813500		2	Elbow 45, O-ring		
27	813316		4	Ball bushing		D
30	926214		4	Grease fitting		D
31	910161		1	Measuring nipple		D
33	313102		N	Cable ties		
34	371669		2	Straight connector		
35	903812		2	Hydraulic hose		
36	903831		2	Nut	M12	
38	388061		1	Adapter		
61	483614		1	Hydraulic hose		
62	482767		1	Hydraulic hose		
63	482435		1	Hydraulic hose		
64	483615		1	Hydraulic hose		
65	483061		1	Hydraulic hose		
66	375031		2	Steering cylinder Up to 68X10966 (Page 130)		C
	392002		2	Steering cylinder From 68X10967 (Page 128)		C
67	234218		2	Tee connector		
68	483109		2	Hydraulic hose		
69	334121		1	Straight connector		
70	483026		2	Hydraulic hose		
71	372424		1	Pilot valve, steering (Page 132)		C
72	502034		4	Screw	UNC 3/8 - 16	
73	904230		4	Washer		
75	813500		1	Elbow 45, O-ring		
76	334248		1	Elbow 45, O-ring		

DynapacParts.com
800-889-0661

DynapacParts.com
800-889-0661

392002 Steering cylinder

16490

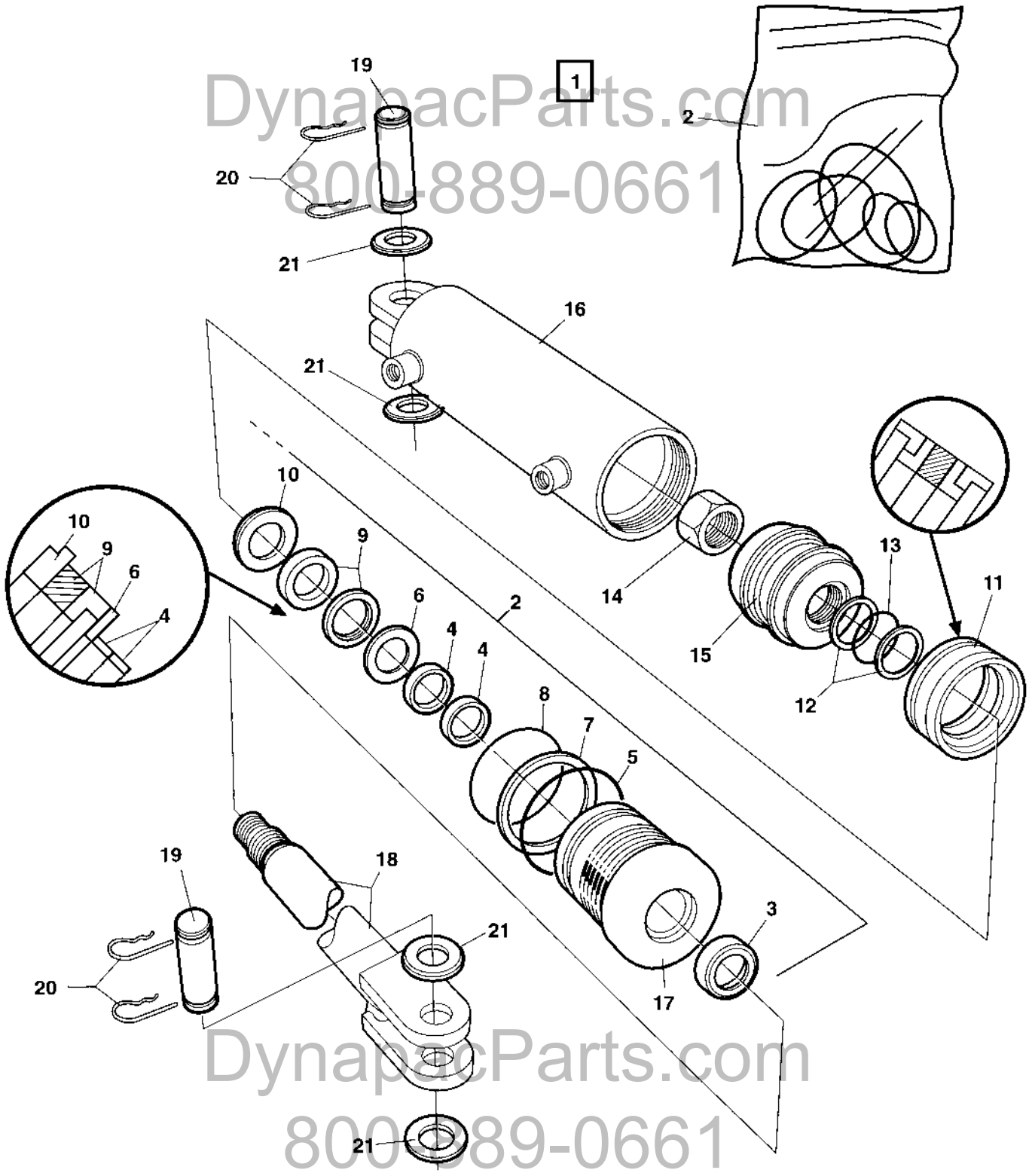

DynapacParts.com
800-889-0661
DynapacParts.com
800-889-0661

392002 Steering cylinder

Ref. No.	Part No.	Rem.	Qty	Description		Code
1	392002		1	Steering cylinder (Page 128)		C
2	392100		1	.Seal kit		
3			1	..Seal		
4			2	..Seal		
5			1	..O-ring		
6			1	..Back-up ring		
7			1	..Back-up ring		
8			1	..O-ring		
9			1	..Seal		
10			1	..Retaining ring		
11			1	..Seal		
12			2	..Back-up ring		
13			1	..O-ring		
14			1	..Lock nut		
15			1	.Piston block		
16			1	.Cylinder		
17			1	.Steering		
18	392105		1	.Piston rod		
19	392103		2	.Shaft		D
20	635061		4	.Hair clip		D
21	600016		4	.Washer	26x45x4	

DynapacParts.com
800-889-0661

DynapacParts.com
800-889-0661

375031 Steering cylinder

16490

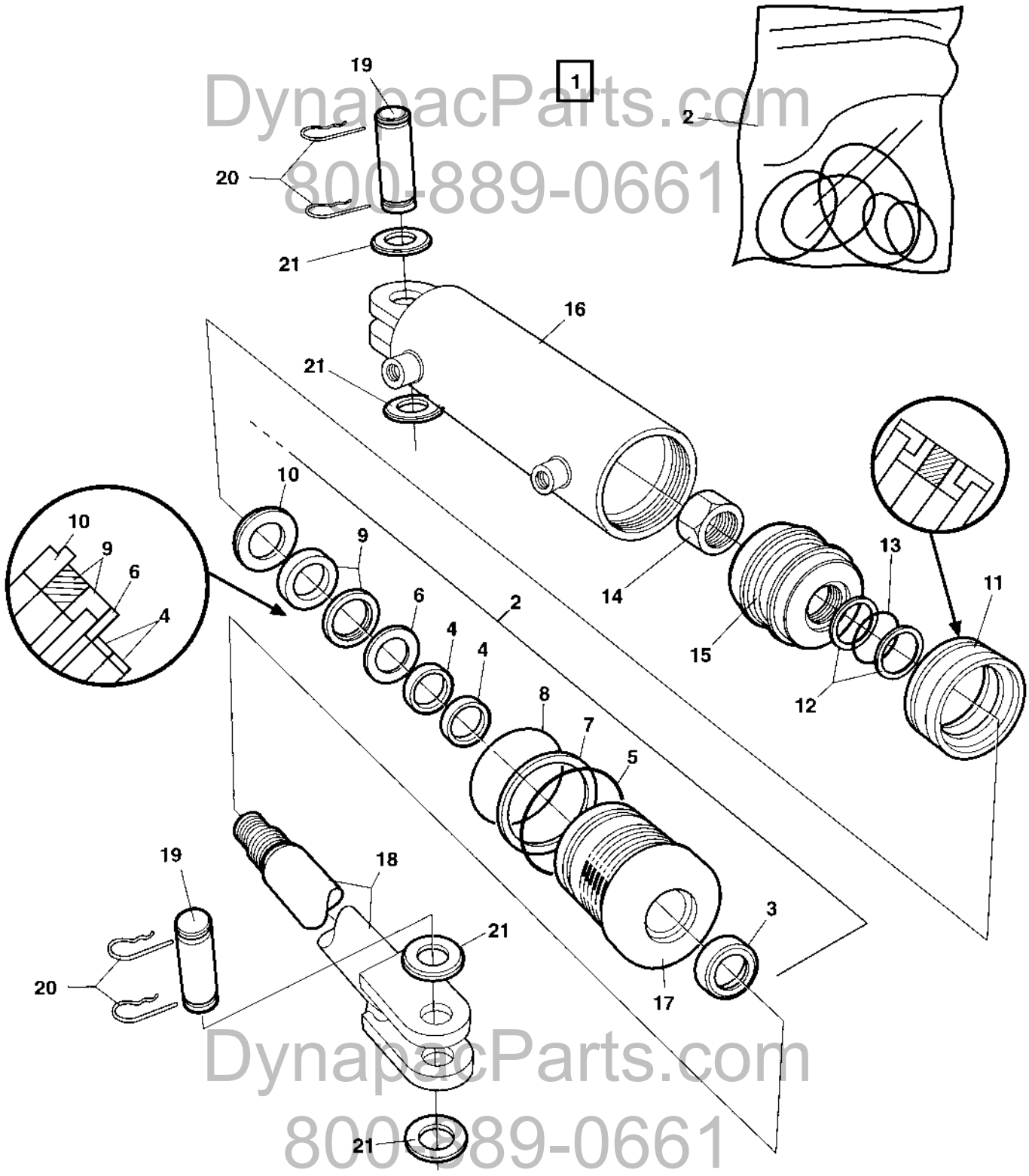

DynapacParts.com
800-889-0661
DynapacParts.com
800-889-0661

375031 Steering cylinder

Ref. No.	Part No.	Rem.	Qty	Description		Code
1			1	Steering cylinder, cpl		
2	904145		1	.Seal kit		D
3			1	..Seal		D
4			2	..Seal		D
5			1	..O-ring		D
6			1	..Back-up ring		D
7			1	..Back-up ring		D
8			1	..O-ring		D
9			1	..Seal		D
10			1	..Retaining ring		D
11			1	..Seal		D
12			2	..Back-up ring		D
13			1	..O-ring		D
14			1	..Lock nut		D
15	904143		1	.Piston block		
16	936267		1	.Cylinder		
17	903619		1	.Steering		
18	936268		1	.Piston rod		
19	347119		2	.Shaft		D
20	635061		4	.Hair clip		D
21	600016		4	.Washer	26x45x4	

DynapacParts.com
800-889-0661

DynapacParts.com
800-889-0661

372424 Pilot valve, steering

15981

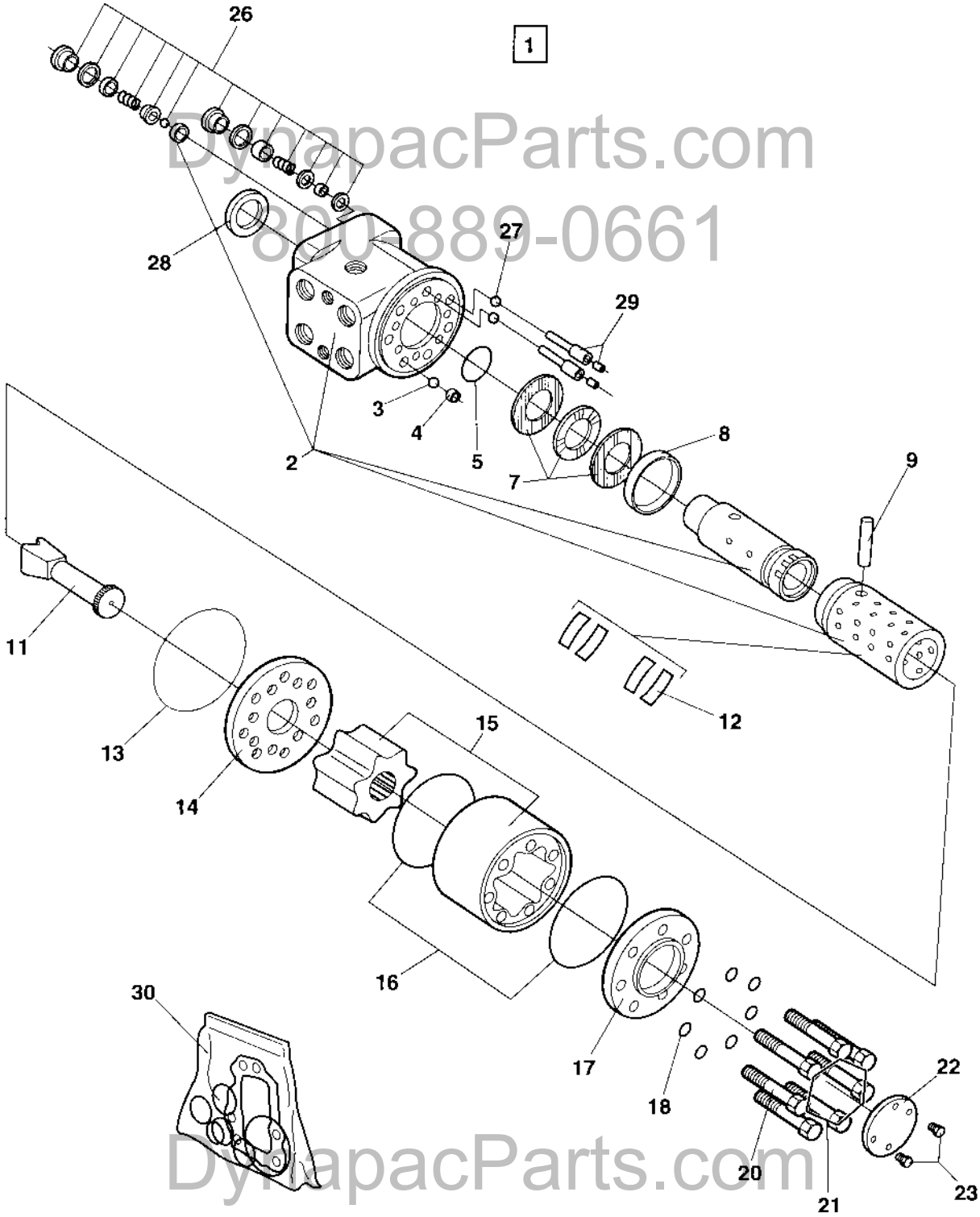

DynapacParts.com
800-889-0661
DynapacParts.com
800-889-0661

372424 Pilot valve, steering

Ref. No.	Part No.	Rem.	Qty	Description		Code
1			1	Pilot valve, cpl		
2			1	.Housing , spool and sleeve , cpl		
3	480468		1	.Ball		
4	480446		1	.Threaded bushing		D
5		1	1	.O-ring		D
7	911620		1	.Bearing		D
8	480449		1	.Ring		
9	480447		1	.Cross pin		
11	902861		1	.Cardan shaft		
12	909211		1	.Set of springs		
13		1	1	.O-ring		
14	902862		1	.Valve plate		
15	903457		1	.Gear wheel set		
16		1	2	.O-ring		
17	480450		1	.End cap		
18		1	7	.Washer		
20	480456		1	.Screw with hole		
21	935428		6	.Screw		
22			1	.Name plate		
23			2	.Screw		
26	929012		2	.Shock valve	22,5-24,0 MPa	
27	929013		2	.Ball		
28		1	1	.Seal ring		
29	929014		2	.Rolled pin		
30	935429		1	.Seal kit		

1) Included in seal kit item 30

DynapacParts.com
800-889-0661

DynapacParts.com
800-889-0661

DynapacParts.com
800-889-0661

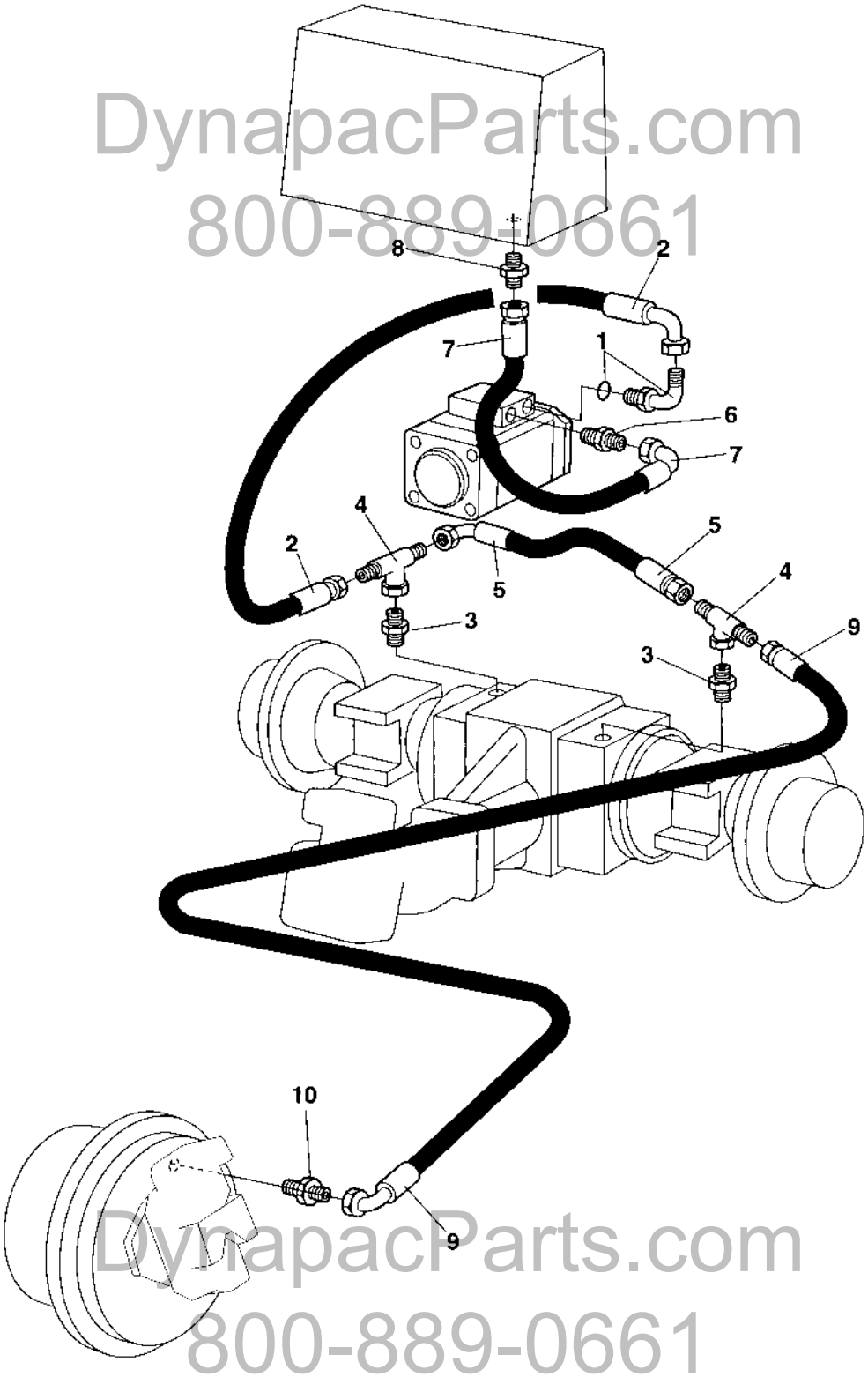

DynapacParts.com
800-889-0661

Brake system

Ref. No.	Part No.	Rem.	Qty	Description	Code
1	334389	A	1	Connector	
2	482056		1	Hydraulic hose	
3	900552		2	Adapter	
4	234888		2	Tee-connector	
5	482399		1	Hydraulic hose	
6	234843	B	1	Adapter	
7	482516		1	Hydraulic hose	
8	334205		1	Straight connector	
9	483122		1	Hydraulic hose	
10	925723		1	Connector	

A) Port X7 on pump
B) Port L4 on pump

DynapacParts.com
800-889-0661

DynapacParts.com
800-889-0661

Hydraulic oil tank

16054-1

DynapacParts.com
800-889-0661

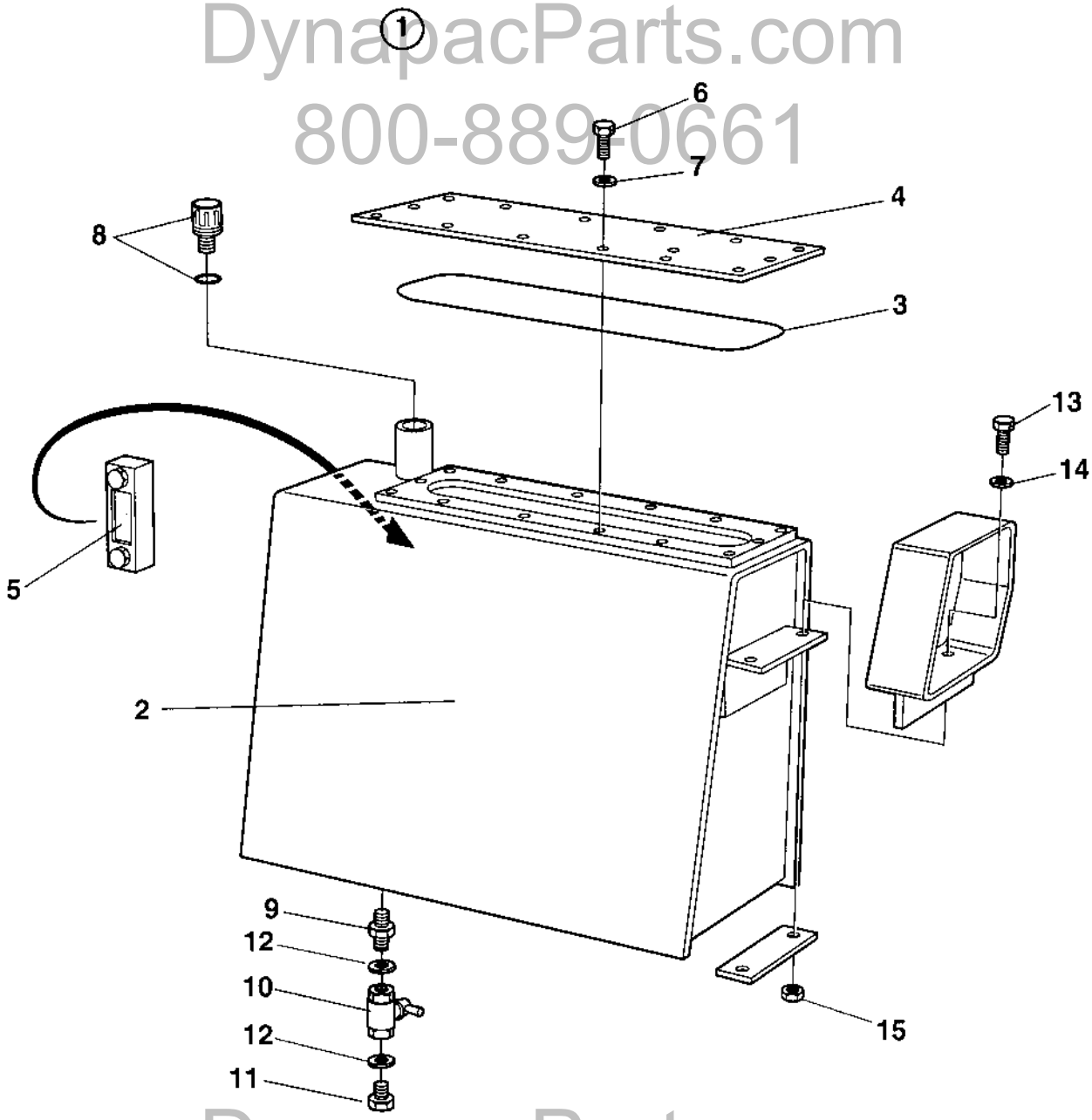

DynapacParts.com
800-889-0661

Hydraulic oil tank

Ref. No.	Part No.	Rem.	Qty	Description		Code
1	372044		1	Hydraulic oil tank, cpl		
2	372029		1	.Hydraulic oil tank		
3	349880		1	.O-ring		
4	349879		1	.Cover		
5	989151		1	.Oil level glass		D
6	500019		14	.Screw		
7	904229		14	.Washer		
8	357138		1	.Ventilating filter		A
9	791119		1	.Adapter	G3/4	
10	233304		1	.Ball valve		
11	232039		1	.Plug	G3/4	
12	791120		2	.Sealing washer		
13	500192		4	Screw	M10x80	
14	904567		4	Washer	10,5x28x6 HB305	
16	570006		4	Nut		

DynapacParts.com
800-889-0661

DynapacParts.com
800-889-0661

Hydraulic oil tank

CA252200500470

DynapacParts.com
800-889-0661

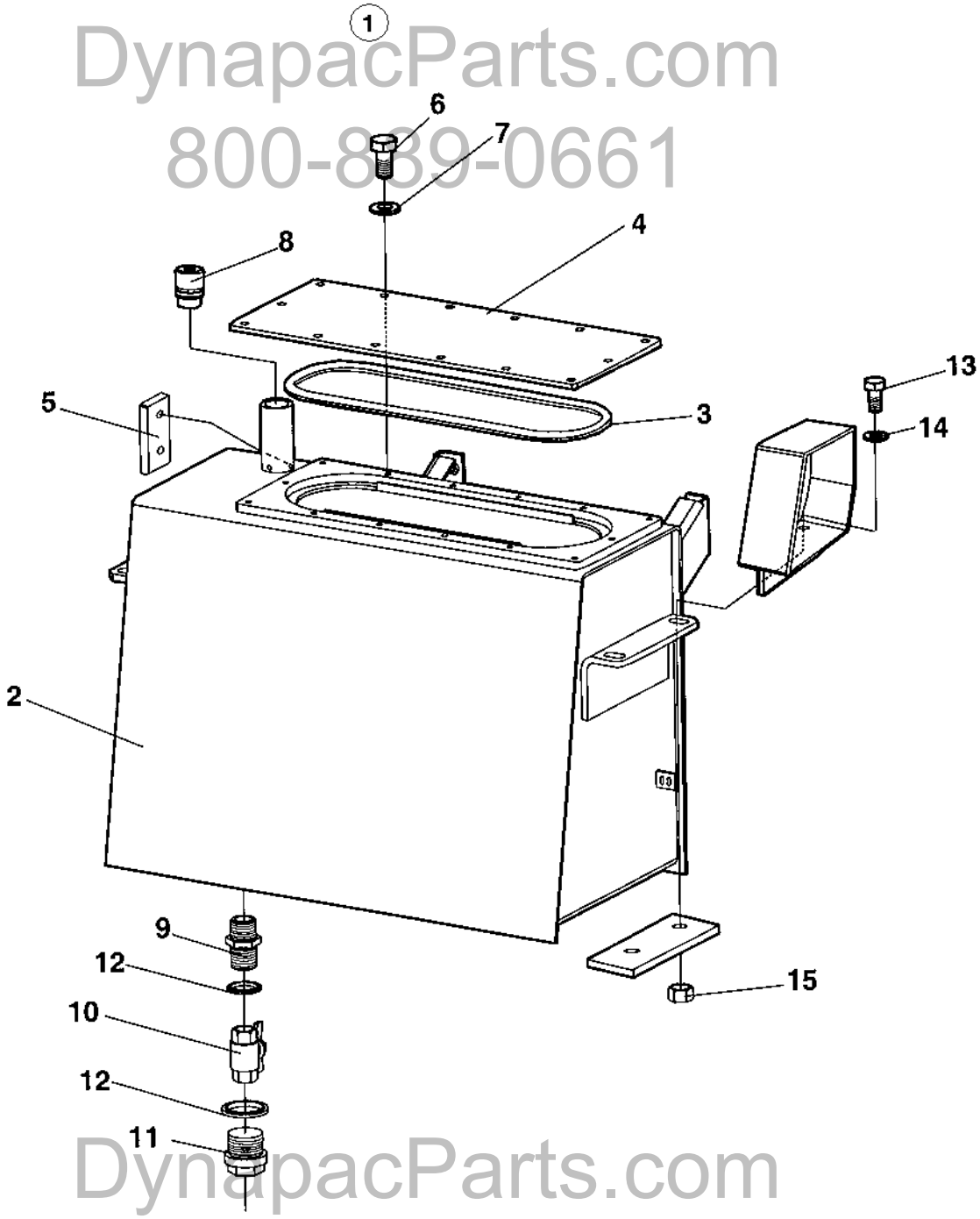

DynapacParts.com
800-889-0661

Hydraulic oil tank

Ref. No.	Part No.	Rem.	Qty	Description		Code
1	389151		1	Hydraulic oil tank, cpl		
2	389152		1	.Hydraulic oil tank		
3	349880		1	.O-ring		
4	349879		1	.Cover		
5	989151		1	.Oil level glass		D
6	500019		14	.Screw		
7	904229		14	.Washer		
8	357138		1	.Ventilating filter		A
9	791119		1	.Adapter	G3/4	
10	233304		1	.Ball valve		
11	232039		1	.Plug	G3/4	
12	791120		2	.Sealing washer		
13	500192		4	Screw	M10x80	
14	904567		4	Washer	10,5x28x6 HB305	
15	570006		4	Nut		

DynapacParts.com
800-889-0661

DynapacParts.com
800-889-0661

Central test panel hydraulic

17119-2

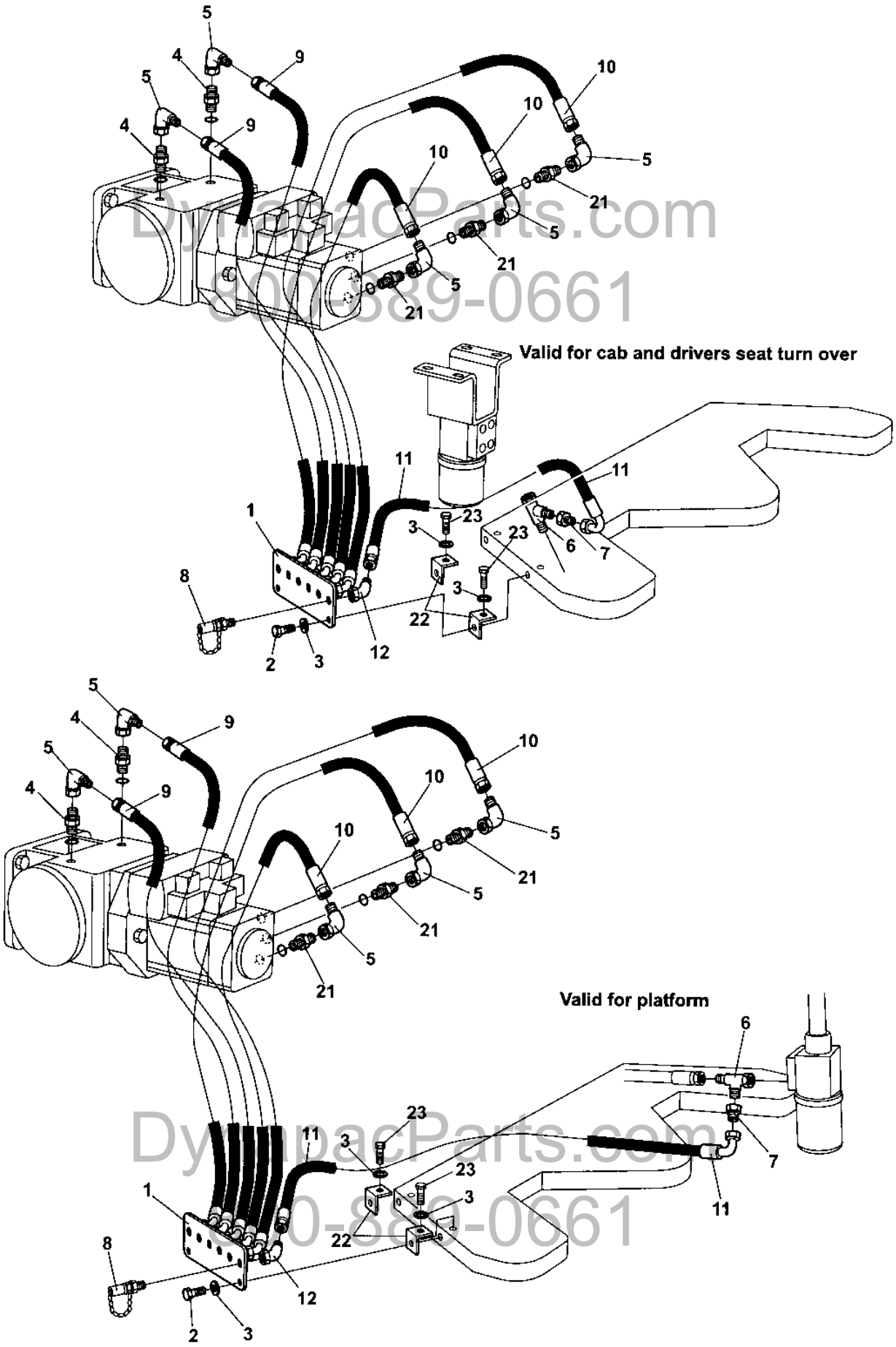

DynapacParts.com
800-889-0661

Central test panel hydraulic

Ref. No.	Part No.	Rem.	Qty	Description		Code
1	374028		1	Test panel		
2	500053		2	Screw		
3	904229		4	Washer		
4	234388		2	Connector		
5	334196		5	Elbow 90		
6	334135		1	Tee-connector		
7	334264		1	Reducing		
8	356348		6	Measuring nipple		D
9	483188		2	Hydraulic hose		
10	483445		3	Hydraulic hose		
11	482726		1	Hydraulic hose		
12	234622		1	Elbow 45		
21	902125		3	Connector		
22	908136		2	Bracket		
23	500018		2	Screw	M8-1,25x12 8,8	

DynapacParts.com
800-889-0661

DynapacParts.com
800-889-0661

Dual speed drum drive Option

17293

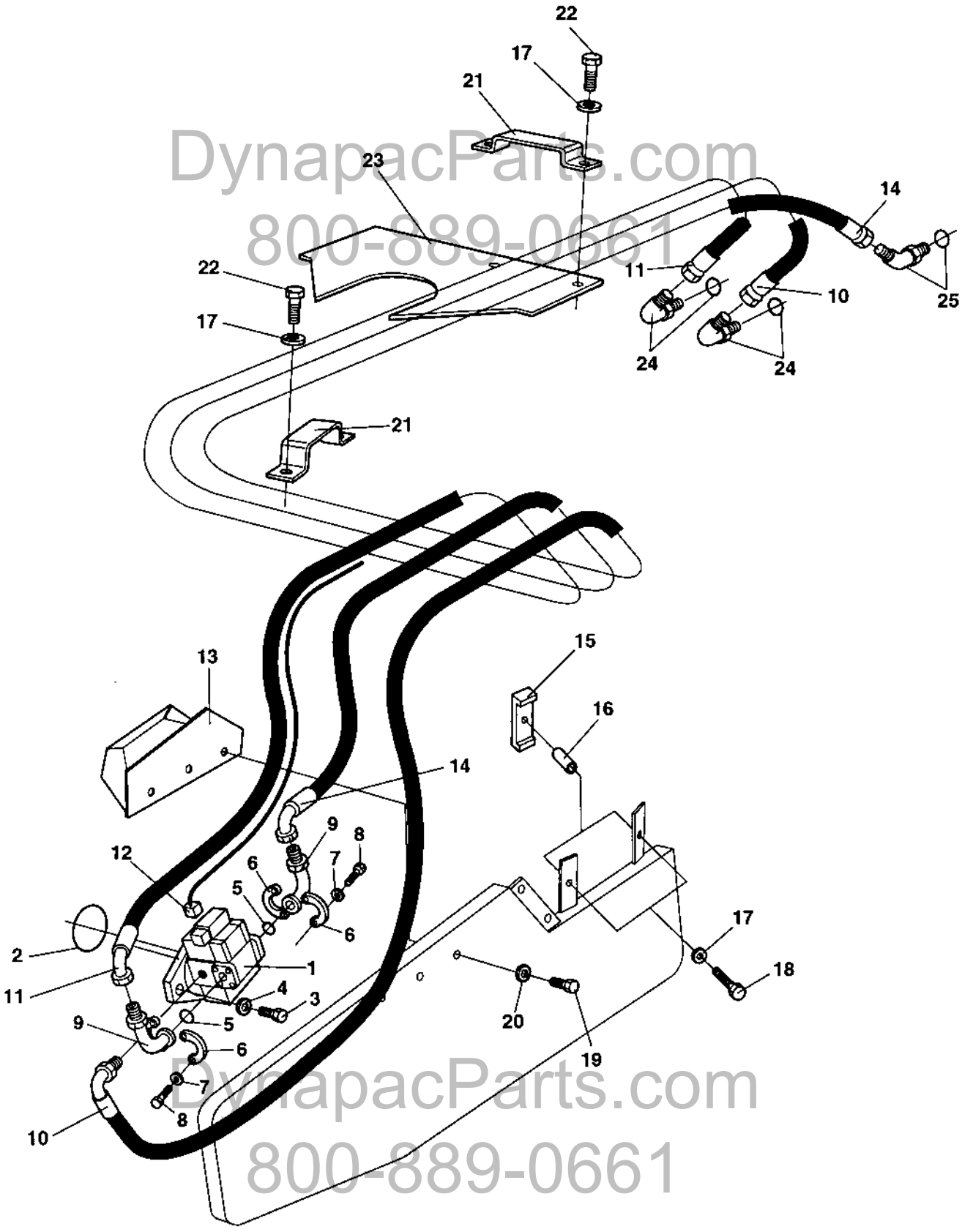

DynapacParts.com
800-889-0661
DynapacParts.com
800-889-0661

Dual speed drum drive Option

Ref. No.	Part No.	Rem.	Qty	Description		Code
1	382051		1	Hydraulic motor, dual speed Up to 68X10373		
	389566		1	Propulsion motor From 68X10374		
2	904058		1	O-ring		
3	500101		2	Screw	M20x50	
4	903290		2	Washer	21x36x6	
5	904005		2	O-ring		
6	923384		4	Flange half		
7	904638		8	Washer	12x22x2	
8	502132		8	Screw	UNC 7/16" x 22	
9	903750		2	Elbow		
10	483114		1	Hydraulic hose		
11	483115		1	Hydraulic hose		
12	372206		1	Cable harness		
13	374251		1	Protecting cover		
14	483116		1	Hydraulic hose		
15	373270		2	Hose clamp		
16	373423		2	Spacer		
17	904229		6	Washer		
18	500032		2	Screw	M10 x 55	
19	500077		3	Screw		
20	904230		3	Washer		
21	373016		2	Hose clamp		
22	500029		4	Screw		
23	372235		1	Hose guard		
24	813499		2	Elbow 90, O-ring		
25	334132		1	Elbow 45, O-ring		

DynapacParts.com
800-889-0661

DynapacParts.com
800-889-0661

DynapacParts.com
800-889-0661

DynapacParts.com
800-889-0661

Electrical equipment

Ref. No.	Part No.	Rem.	Qty	Description	Code
100				Electric system (Page 146)	
150				Relay and Fuses (Page 148)	
200				Instrument box (Page 150)	
310				Instrument panel (Page 152)	Main
325				Instrument panel (Page 154)	Upper left
350				Instrument panel (Page 156)	Upper right
375				Instrument panel (Page 158)	Lower left
400				Instrument panel (Page 160)	Lower right
500				Emergency stop panel Up to 68X10373 (Page 162)	
510				Emergency stop panel From 68X10374 (Page 164)	
555				Driving lights (Page 166)	Option
565				Working lights (Page 170)	Option
570				Rotating beacon (Page 172)	Option
580				Compaction meter Up to 68X10371 (Page 17	Option
581				Compaction meter From 68X10372 (Page 17	Option
590				Speedometer and frequency meter Up to 68X	Option (Page 178)
595				Speedometer and frequency meter From 68X	Option (Page 180)
600				Tachograph (Page 182)	Option
605				Tachograph, platform (Page 184)	Option
607				Tachograph , cab (Page 186)	Option
608				Tachograph, simple cab (Page 188)	Option
610				Back-up alarm Up to 68X10565 (Page 190)	Option
615				Back-up alarm From 68X10566 (Page 192)	Option
620				Protecting cover, Headlight (Page 194)	Option
630				Field computer assembly (Page 196)	Option
640				Compaction Analyzer From 68X10372 (Page	Option

DynapacParts.com
800-889-0661

DynapacParts.com
800-889-0661

Electric system

17737-1

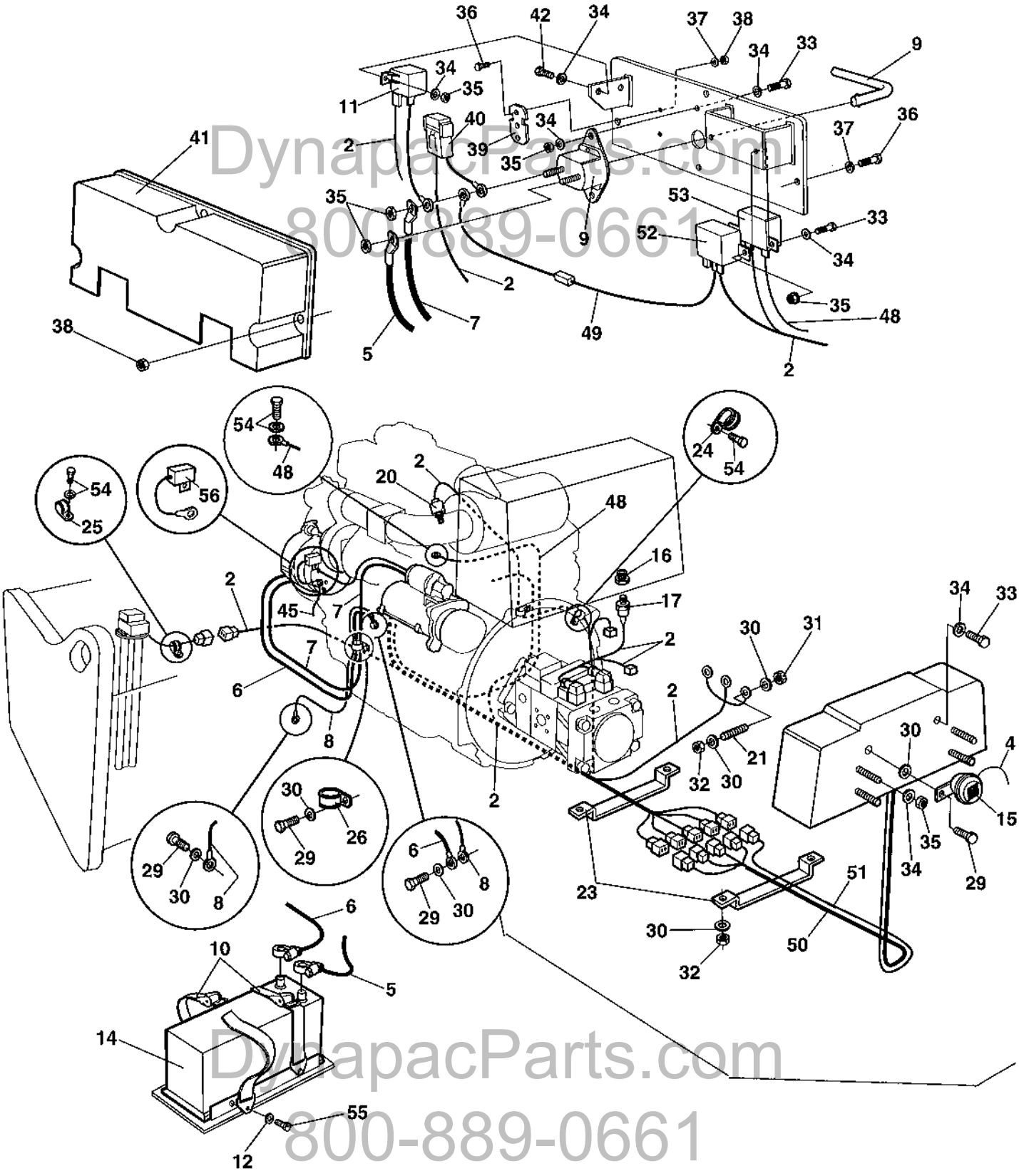

DynapacParts.com
800-889-0661

Electric system

Ref. No.	Part No.	Rem.	Qty	Description		Code
2	386902		1	Cable harness		
4	372997		1	Cable harness		
5	791503		1	Battery cable		
6	791504		1	Battery cable		
7	791507		1	Connection cable, coarse		
8	791508		1	Connection cable, coarse		
9	930150		1	Battery switch		D
	928021		1	.Key		D
10	791371		2	Strap		
11	904448	1	1	Relay		D
12	904228		4	Washer		
14	470021		1	Battery		
15	999027		1	Horn		D
16	813434		1	Reducer		
17	903631		1	Temperature sensor	Hydraulic oil	D
20	924737		1	Indicator		
21	903768		3	Threaded stud		
23	372649		2	Cable holder		
24	921080		2	Clamp		
25	921072		1	Clamp		
26	921116		1	Clamp		
29	500053		4	Screw		
30	904229		14	Washer		
31	570005		4	Nut		
32	586003		7	Lock nut		
33	500040		6	Screw		
34	904639		15	Washer	6,7x14x1,5	
35	902285		11	Lock nut		
36	500006		5	Screw	M5x16	
37	904281		9	Washer		
38	902284		6	Nut	M5	
39	904036		1	Fuse holder		
40	904037		1	Fuse	30A	D
	904032		1	Fuse holder		
41	373891		1	Cover		
42	513012		2	Screw	M6x20 10,9	
45	791512		1	Connection cable		
48	387221		1	Cable harness		
49	387220		1	Cable harness		
	791477		1	.Fuse holder		
	791514		1	.Fuse	100A - Blue	D
50	381615		1	Cable harness		
51	387005		1	Cable harness		
52	939464		1	Pre-heater relay		
53	939465		1	Heater control module		
54			0	Existing		
55	500012		4	Screw		
56	791045		1	Capacitor From 68X10589		

1) Start relay

DynapacParts.com
800-889-0661

DynapacParts.com
800-889-0661

Relay and Fuses

16843

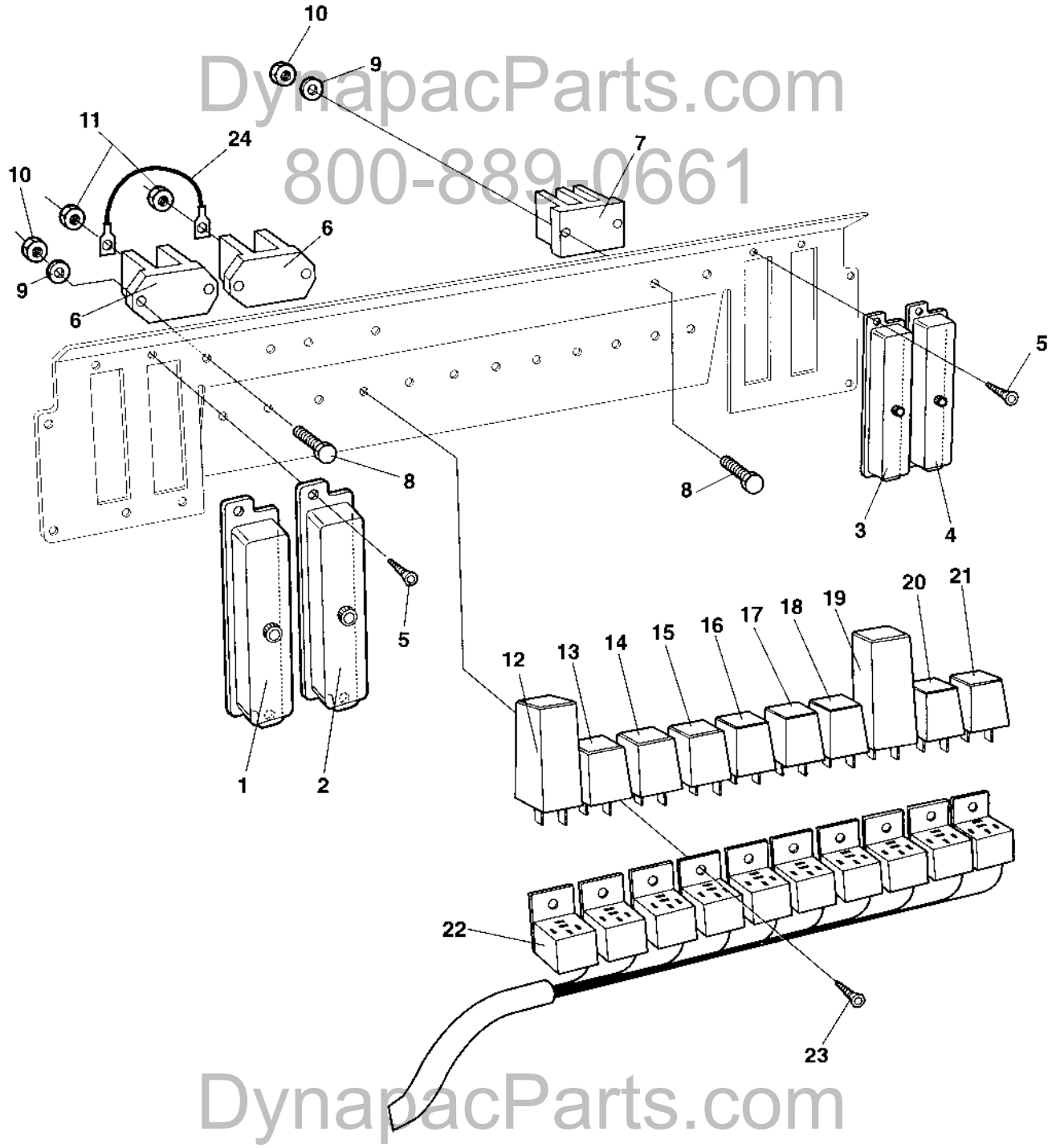

DynapacParts.com
800-889-0661
DynapacParts.com
800-889-0661

Relay and Fuses

Ref. No.	Part No.	Rem.	Qty	Description		Code
1	901256		1	Fuse box		
	908110		1	.Cover		
	901224		N	Fuse	3A	D
	901225		N	Fuse	5A	B
	901226		N	Fuse	7.5A	
	901227		N	Fuse	10A	B
	903741		N	Fuse	20A Yellow Medium	B
2	901256		1	Fuse box		
	901240		1	Connector		
3	901256		1	Fuse box		
4	901256		1	Fuse box		
5	901767		8	Screw	ST3,5x9,5 Black	
6	392930		2	Junction box		
7	903625		1	Junction block		
8	533013		6	Screw	M4x20	
9	904698		6	Washer		
10	923976		6	Nut		
11	570004		2	Nut	M6	
12	382782		1	Relay, VBS		D
13	287598	A	1	Relay	12V-30A	
14	287597	B	1	Relay		D
16	287597	D	1	Relay		D
17	287597	E	1	Relay		D
18	287597	F	1	Relay		D
19	904989		1	Flash relay	Option	D
20	287598	G	1	Relay	12V-30A	
21	287598	H	1	Relay	12V-30A	
22	357562		10	Relay holder		
23	902223		9	Screw		
24	903970		1	Cable		

A) Main relay
B) Horn relay
D) Fuel level relay
E) Back-up alarm relay
F) Light relay
G) Brake relay
H) Air Condition relay

DynapacParts.com
800-889-0661

DynapacParts.com
800-889-0661

Instrument box

17021

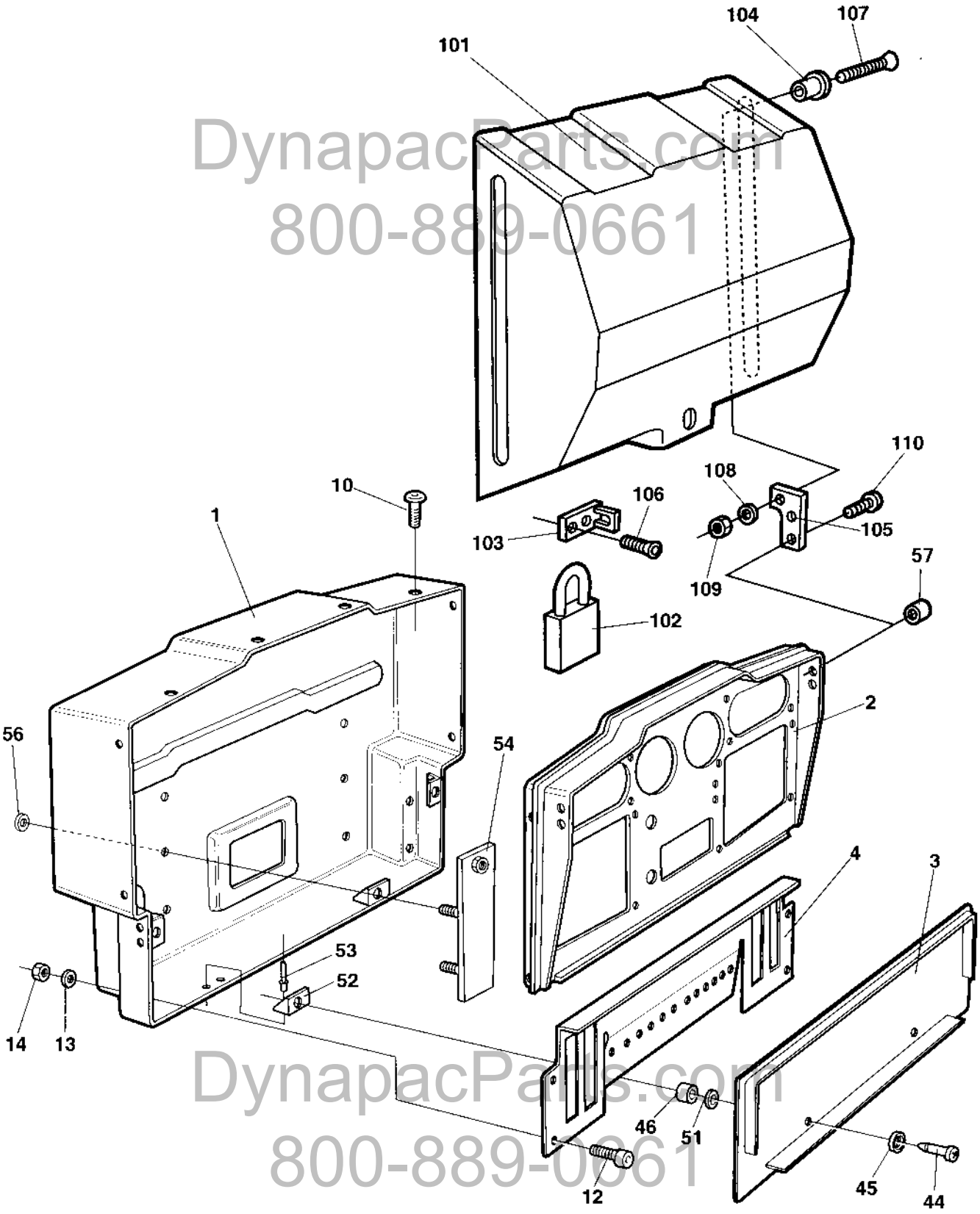

DynapacParts.com
800-889-0661
DynapacParts.com
800-889-0661

Instrument box

Ref. No.	Part No.	Rem.	Qty	Description		Code
1	374098		1	Instrument box		
2	374379		1	Control panel		
3	359845		1	Cover		
4	370165		1	Relay bracket		
10	903658		8	Screw	M5x10	
12	500040		4	Screw		
13	904228		4	Washer		
14	902285		4	Lock nut		
44	903599		4	Trunnion		
45	903600		4	Rubber washer		
46	903601		4	Washer		
51	903678		4	Rubber washer		
52	903602		4	Locking device		
53	903436		8	Blind rivet		
54	374099		2	Bracket		
56	903961		4	Washer		
57	903653		4	Plug		
100		A	1	Control panel cover		
101	372103		1	Cover		
102	358881		1	Pad lock		
103	372104		1	Eyelet		
104	357855		2	Bushing		
105	372105		2	Bracket		
106	904207		2	Screw		
107	904208		2	Screw		
108	904228		2	Washer		
109	586002		2	Lock nut		
110	903658		4	Screw	M5x10	

A) Option

DynapacParts.com
800-889-0661

DynapacParts.com
800-889-0661

Instrument panel Main

17020

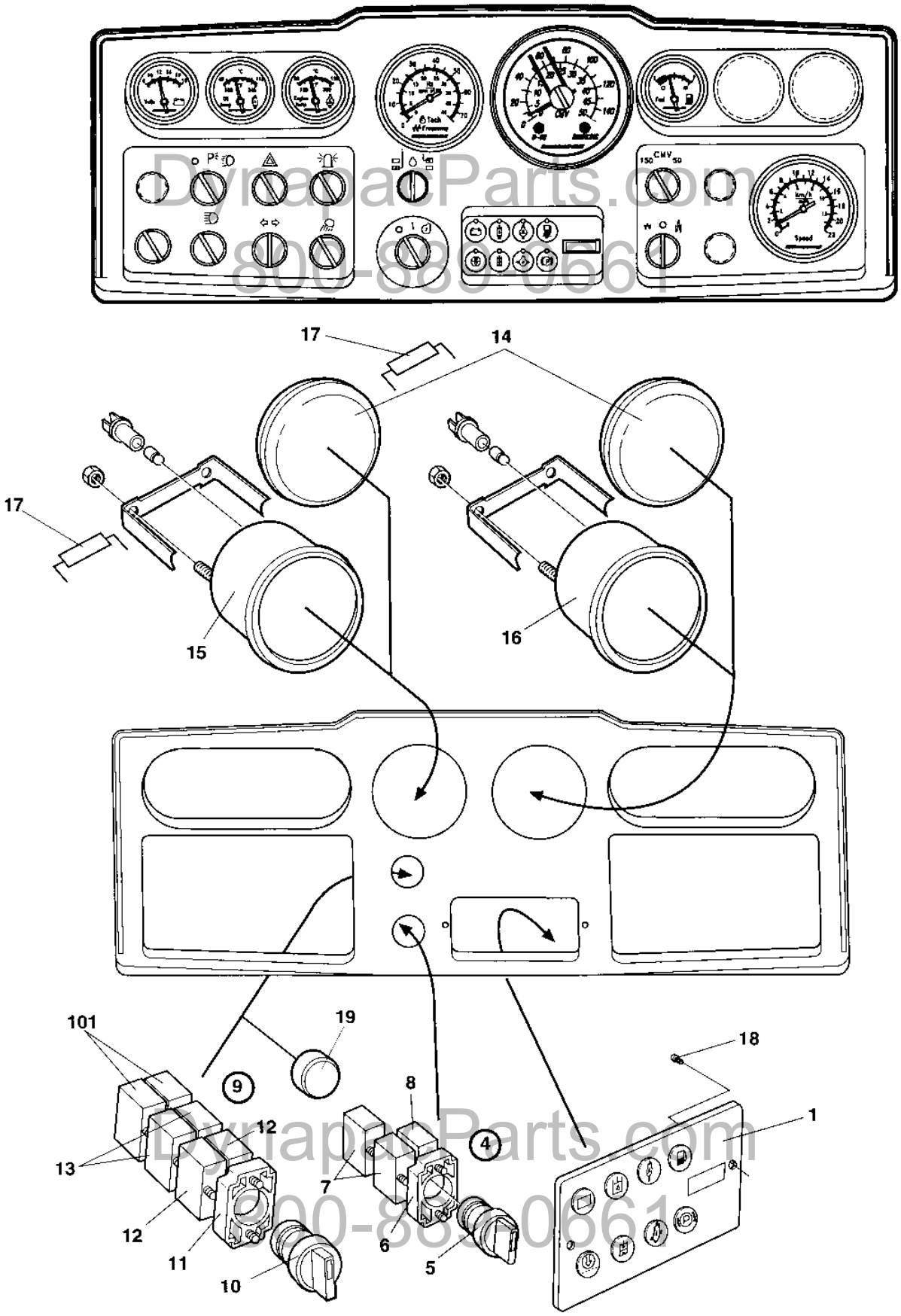

DynapacParts.com
800-889-0661

Instrument panel Main

Ref. No.	Part No.	Rem.	Qty	Description	Code
1	380660		1	Display	D
4		B	1	Switch	D
5	932050		1	.Switch	
6	903876		1	.Connector	
7	930154		2	.Contact piece, NC	
8	930163		1	.Contact piece, NO	D
9			1	.Frequency/tacho selector	D
10	932058		1	.Switch	
11	903876		1	.Connector	
12	930163		2	.Contact piece, NO	D
13	930154		2	.Contact piece, NC	
14	345139		2	Hole plug	
15	371275		1	Tachometer and frequency meter	
			1	Bulb	
16	372663		1	Speedometer	
			1	Bulb	
17	357526		2	Resistor	
18	903657		2	Screw	
19	911456		1	Hole plug	
101	930163	C	2	Contact piece, NO	D

B) Start
C) Option tachograph

DynapacParts.com
800-889-0661

DynapacParts.com
800-889-0661

Instrument panel Upper left

15989

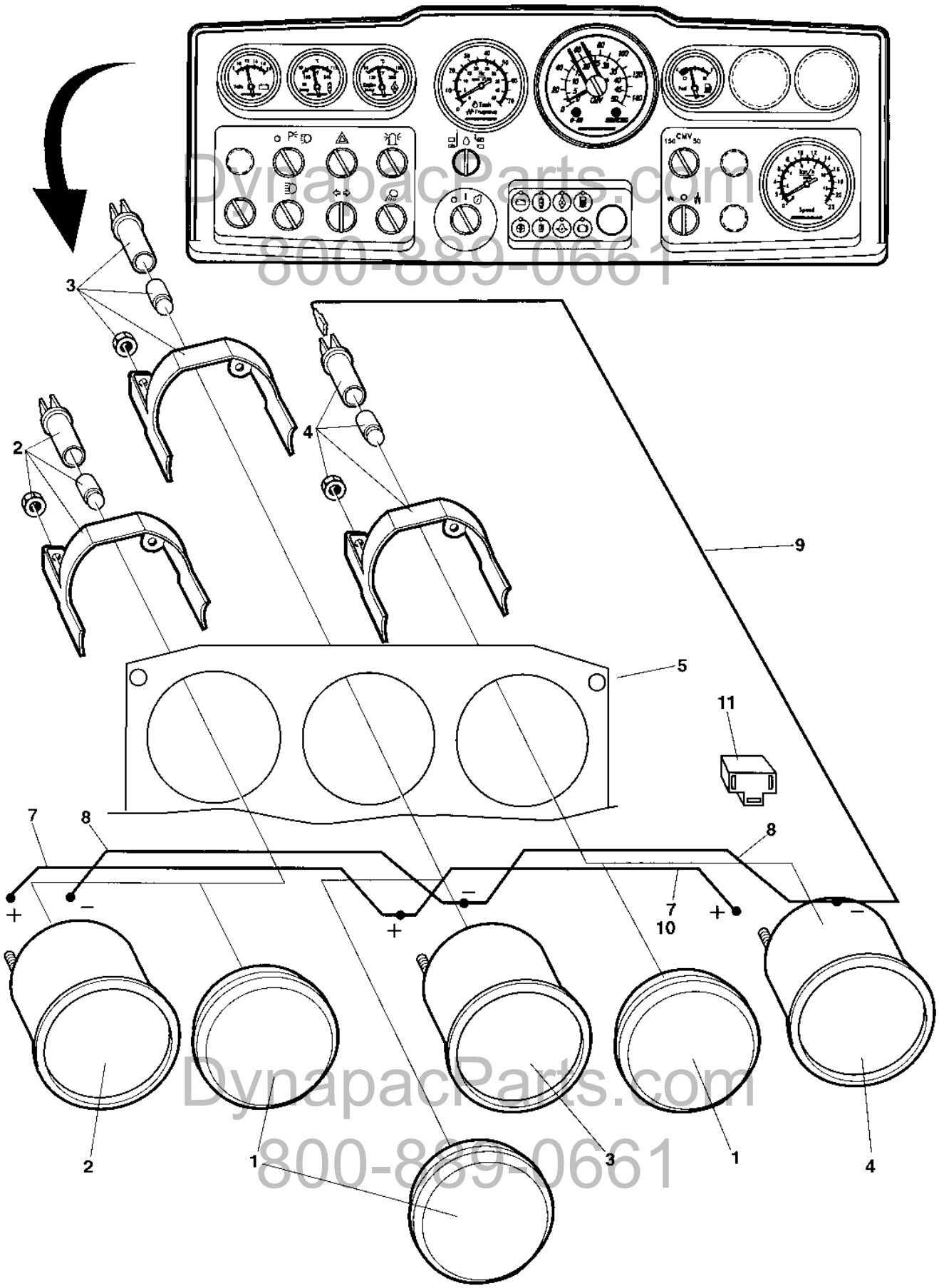

DynapacParts.com
800-889-0661
DynapacParts.com
800-889-0661

Instrument panel Upper left

Ref. No.	Part No.	Rem.	Qty	Description		Code
1	345870		3	Plug		
2	359340		1	Voltmeter		D
	355258		1	.Lamp holder		
	985012		1	.Bulb		D
3	359341		1	Temperature meter, hydraulic oil	Option	D
	355258		1	.Lamp holder		
	985012		1	.Bulb		D
4	381874		1	Water temperature gauge	Option	
	904890		1	.Lamp holder		
	904889		1	.Bulb		
5			1	Control panel plate		
7	343550		1	Connection cable		
8	903927		2	Cable		
9	904016		3	Cable		
10	343551		1	Cable		
11	904819		1	Contact		

DynapacParts.com
800-889-0661

DynapacParts.com
800-889-0661

Instrument panel Upper right

15991

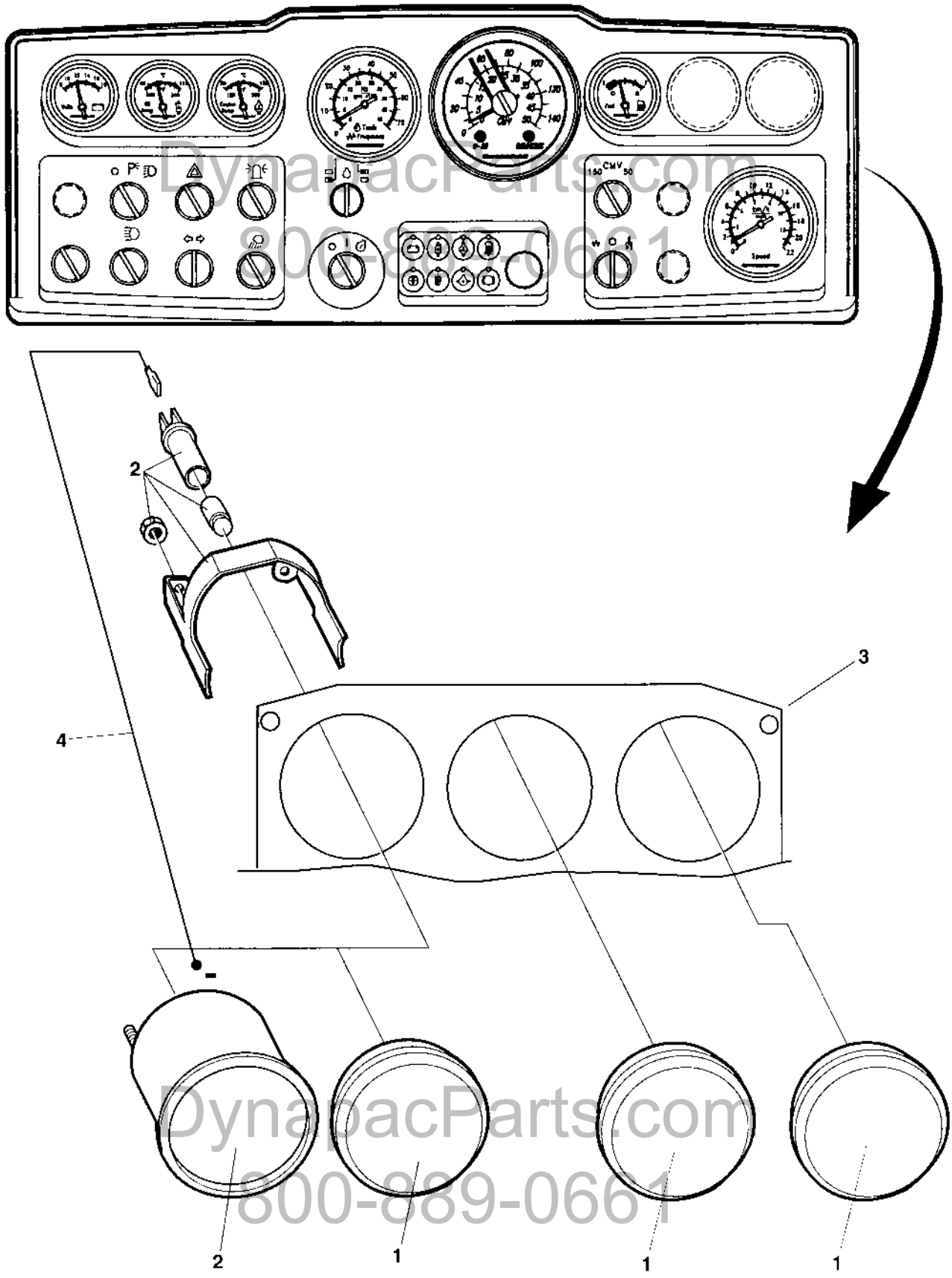

DynapacParts.com
800-889-0661

Instrument panel Upper right

Ref. No.	Part No.	Rem.	Qty	Description	Code
1	345870		3	Plug	
2	359343		1	Fuel gauge	D
	355258		1	.Lamp holder	
	985012		1	.Bulb	D
			1	Fuel level sender	D
			2	Water level sender	D
3			1	Control panel plate	D
4	904016		1	Cable	

DynapacParts.com
800-889-0661

DynapacParts.com
800-889-0661

Instrument panel Lower left

17035

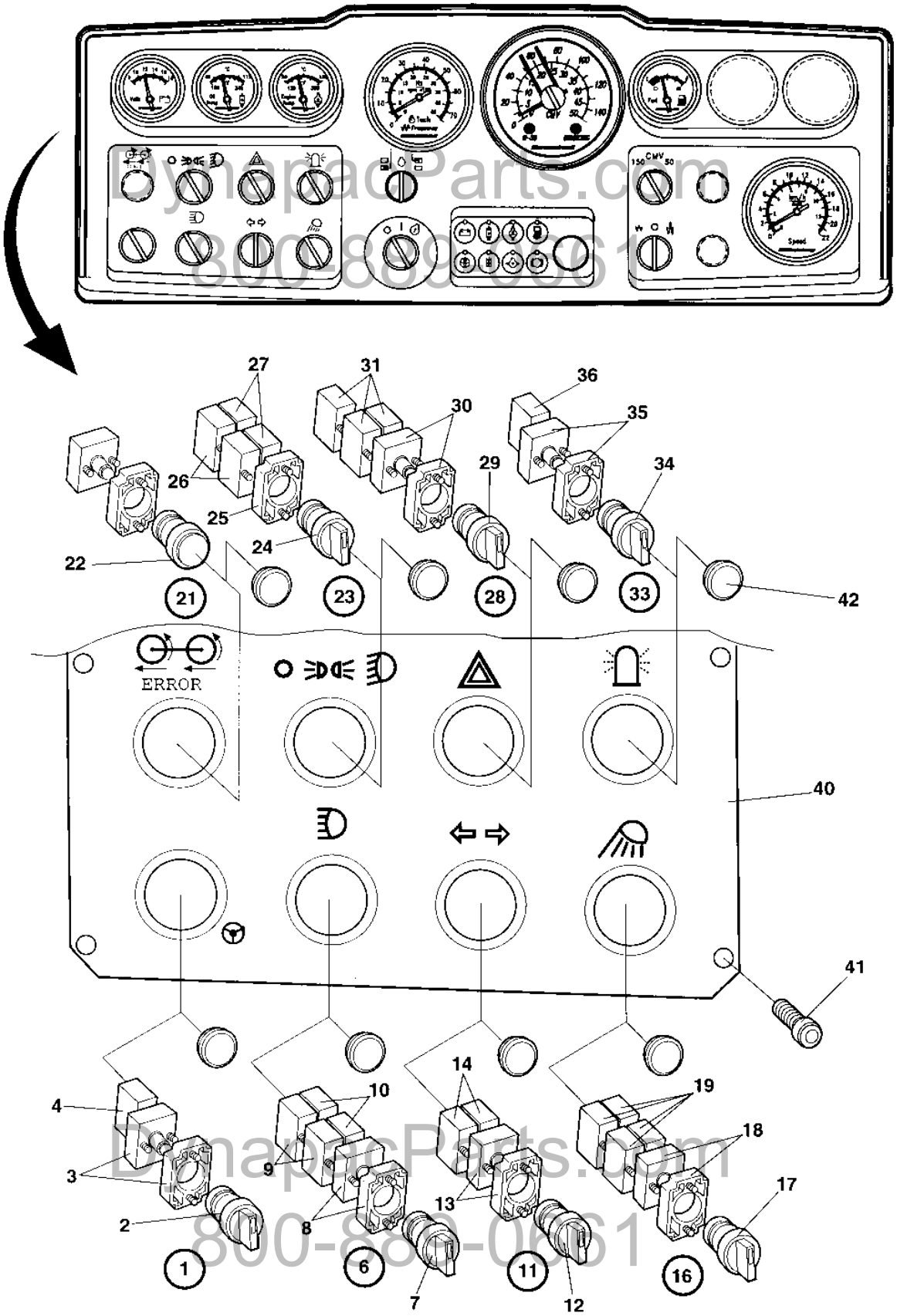

DynapacParts.com
800-889-0661

Instrument panel Lower left

Ref. No.	Part No.	Rem.	Qty	Description		Code
6		C	1	Switch, cpl		
7	932057	M	1	Switch		
8	903875		1	.Flange with light		
	985012		1	Bulb		D
9	930154		2	.Contact piece, NC		
10	930163		2	.Contact piece, NO		D
11		D	1	Switch, cpl		D
12	930161	E	1	.Switch		D
13	903875		1	.Flange with light		
	985012		1	Bulb		D
14	930163		2	.Contact piece, NO		D
16		F	1	Switch, cpl		D
17	930166	B	1	.Switch		D
18	903875		1	.Flange with light		
	985012		1	Bulb		D
19	930163		4	.Contact piece, NO		D
21	985146	A	1	Pilot lamp cpl	Red	D
	985012		1	Bulb		D
22	932034	G	1	.Lamp glass, Red		
23		H	1	Switch, cpl		
24	932058	I	1	.Switch		
25	903876		1	.Connector		
26	930154		2	.Contact piece, NC		
27	930163		2	.Contact piece, NO		D
28		J	1	Switch, cpl		D
29	932056	G	1	.Switch		D
30	903875		1	.Flange with light		
	985012		1	Bulb		D
31	930163		3	.Contact piece, NO		D
33		L	1	.Switch, cpl		D
34	930166	B	1	.Switch		D
35	903875		1	.Flange with light		
	985012		1	Bulb		D
36	930163		1	.Contact piece, NO		D
40	372665		1	Control panel plate		
41	903657		6	Screw		
42	911456	K	-	Hole plug		

A) Anti spin
B) Yellow
C) Main beam
D) Direction indicator
E) Green
F) Working light
G) Red
H) Parking/dipped beam
I) Black
J) Hazard flasher
K) Quantity as required
L) Rotating beacon
M) Blue

DynapacParts.com
800-889-0661

DynapacParts.com
800-889-0661

Instrument panel Lower right

17764

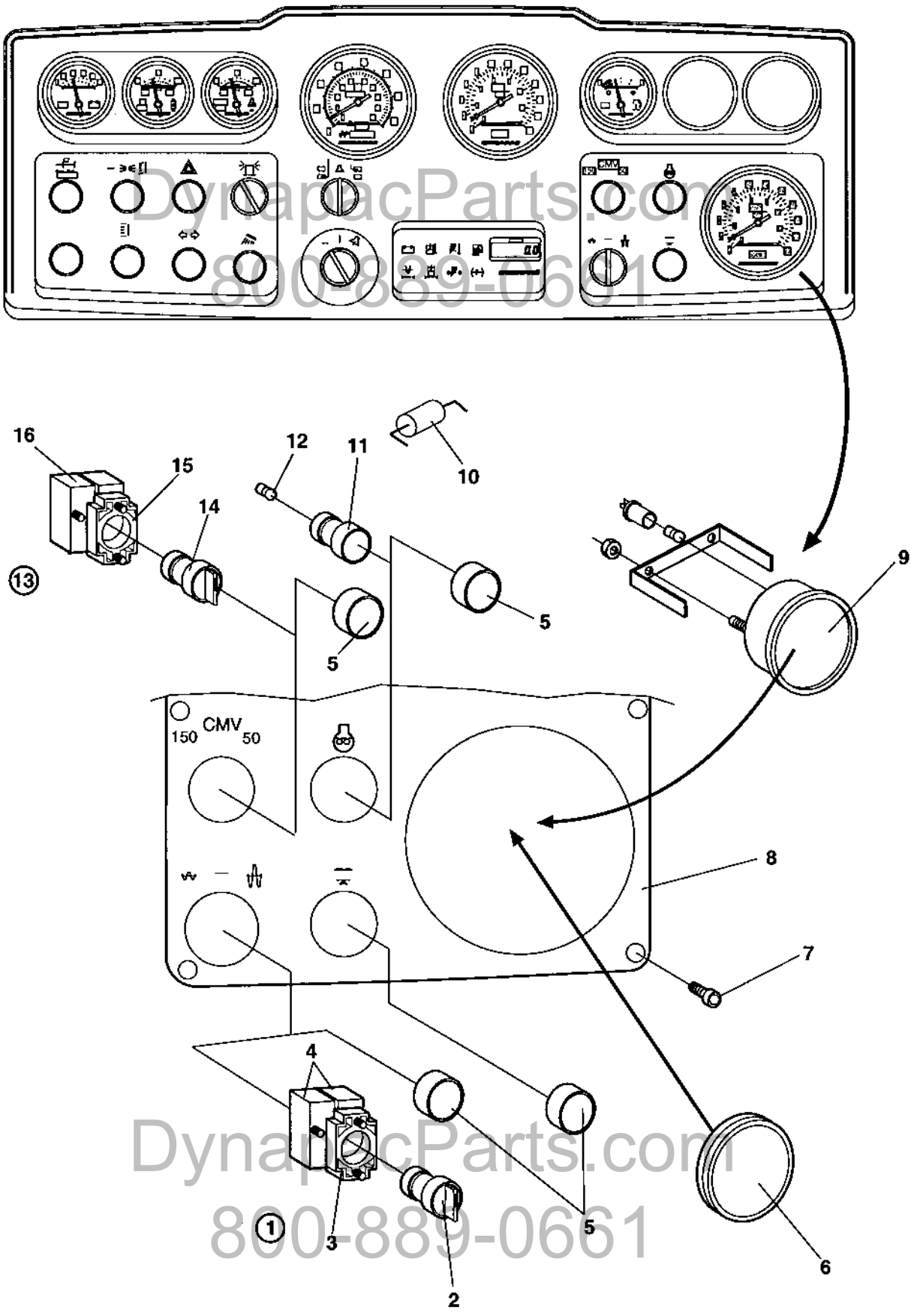

DynapacParts.com
800-889-0661

Instrument panel Lower right

Ref. No.	Part No.	Rem.	Qty	Description		Code
1		A	1	Switch, cpl		
2	932058	B	1	.Switch		
3	903876		1	.Connector		
4	930163		2	.Contact piece, NO		D
5	911456		4	Hole plug		
6	345139		1	Hole plug		
7	903657		6	Screw		
8	387133		1	Control panel		
9	372663		1	Speedometer		
10	357526		1	Resistor		
11	985145		1	Pilot lamp cpl	Green	
12	985012		1	Bulb		D
13		C	1	Switch, cpl		D
14	930192	B	1	.Switch		D
15	903876		1	.Connector		
16	930163		1	.Contact piece, NO		D

A) Amplitude selector
B) Black
C) Cmv selector

DynapacParts.com
800-889-0661

DynapacParts.com
800-889-0661

Emergency stop panel

15963-1

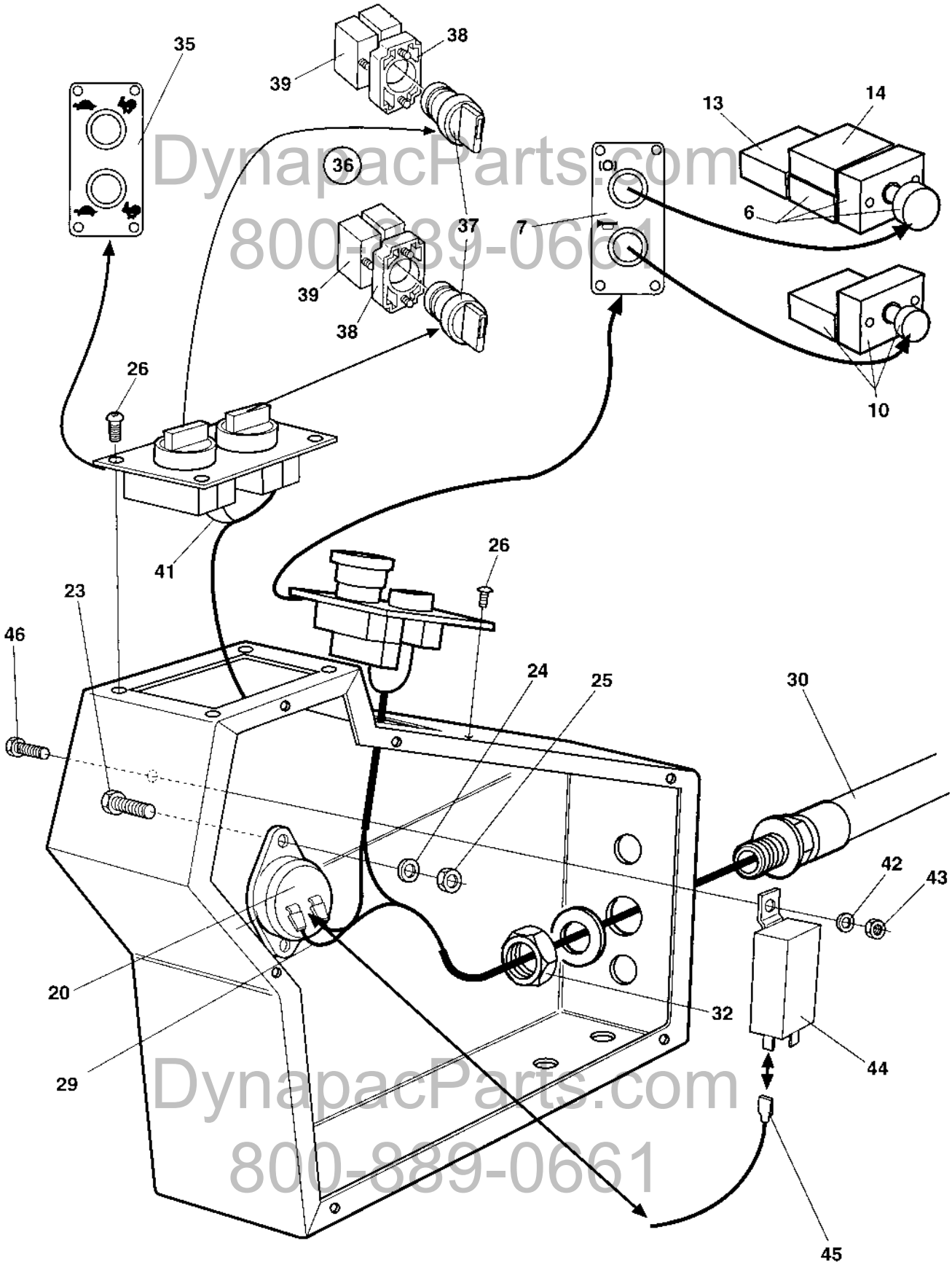

DynapacParts.com
800-889-0661

Emergency stop panel

Ref. No.	Part No.	Rem.	Qty	Description		Code
6	930200		1	Emergency stop		
	930154		1	.Contact piece, NC		
7	359941		1	Control panel plate		
10	932032	A	1	Push button		
	930163		1	.Contact piece, NO		D
13	930154		1	Contact piece, NC		
14	930163		1	Contact piece, NO		D
20	355301		1	Buzzer		D
23	500086		1	Screw		
24	904698		1	Washer		
25	570002		1	Nut	M4	
26	904206		8	Screw		
29	960792		1	Cable		
30	372204		1	Cable harness		
32	791253		1	Nut		
35	372749		1	Control panel plate		
36		B	2	Switch, cpl		
37	930192	C	1	.Switch		D
38	903876		1	.Connector		
39	930163		1	.Contact piece, NO		D
41	343551		1	Cable		
42	904228		1	Washer		
43	586002		1	Lock nut		
44	904704	D	1	Relay		
45	380708	D	1	Cable harness		
46	904206		1	Screw		

A) Horn
B) Speed low/high
C) Black
D) Interlock, Option

DynapacParts.com
800-889-0661

DynapacParts.com
800-889-0661

Emergency stop panel

18063

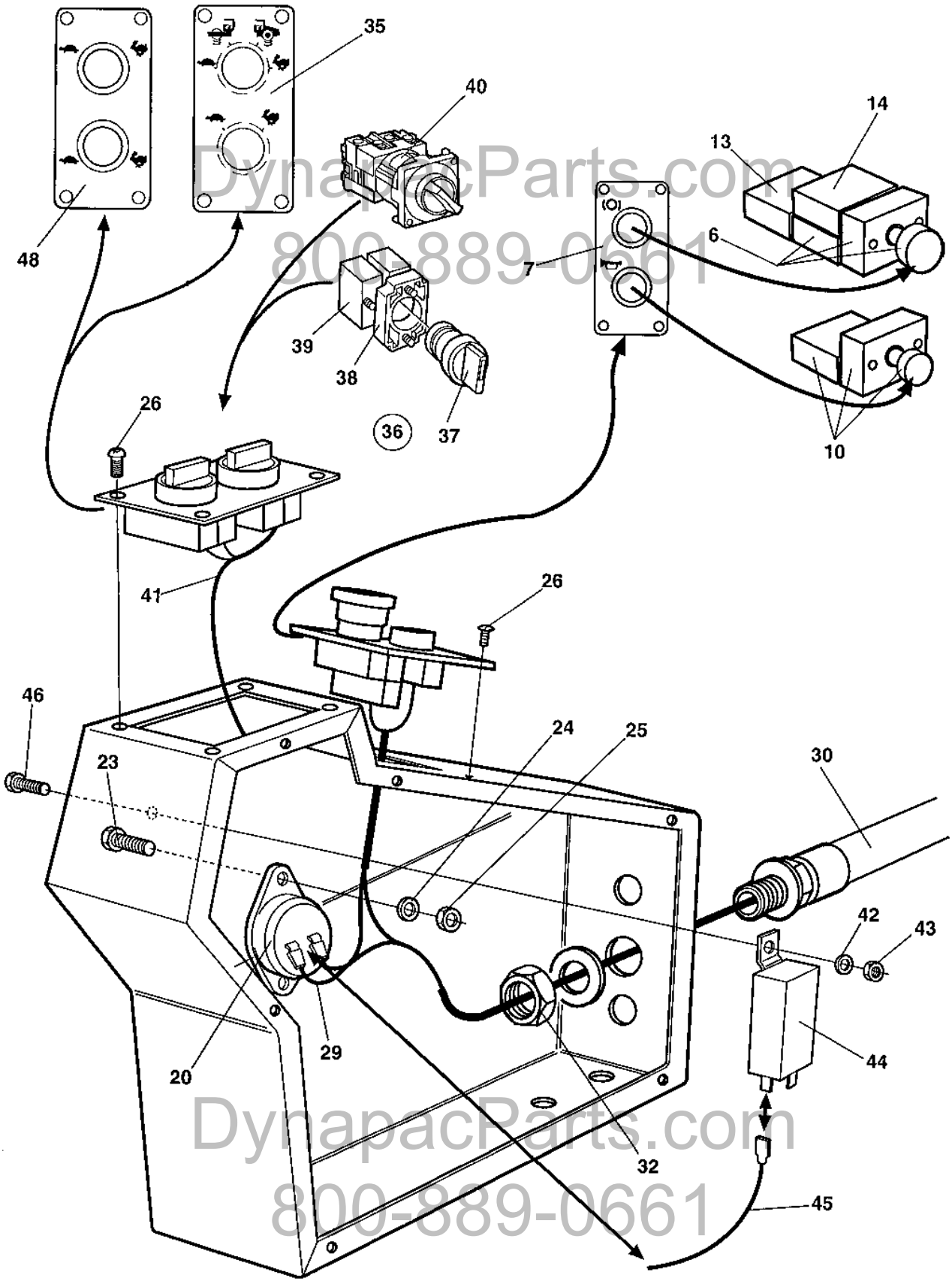

DynapacParts.com
800-889-0661
DynapacParts.com
800-889-0661

Emergency stop panel

Ref. No.	Part No.	Rem.	Qty	Description		Code
6	930200		1	Emergency stop		
	930154		1	.Contact piece, NC		
7	359941		1	Control panel plate		
10	932032	A	1	Push button		
	930163		1	.Contact piece, NO		D
13	930154		1	Contact piece, NC		
14	930163		1	Contact piece, NO		D
20	355301		1	Buzzer		D
23	500086		1	Screw		
24	904698		1	Washer		
25	570002		1	Nut	M4	
26	904206		8	Screw		
	903658		8	Screw	M5x10	
29	960792		1	Cable		
30	372204		1	Cable harness		
32	791253		1	Nut		
35	389075		1	Control panel plate		
36		F	2	Switch, cpl		
37	930192	C	1	.Switch		D
38	903876		1	.Connector		
39	930163		1	.Contact piece, NO		D
40	389119	B	1	Switch		
41	343550	E	1	Connection cable		
42	904228		1	Washer		
43	586002		1	Lock nut		
44	904704	D	1	Relay		
45	380708	D	1	Cable harness		
46	904206		1	Screw		
48	372749	E	1	Control panel plate		

A) Horn
B) Option. Traction control, 4-way switch.
C) Black
D) Interlock, Option
E) Option.
F) One switch is option and used together with item 48.

DynapacParts.com
800-889-0661

DynapacParts.com
800-889-0661

Driving lights Option

17488

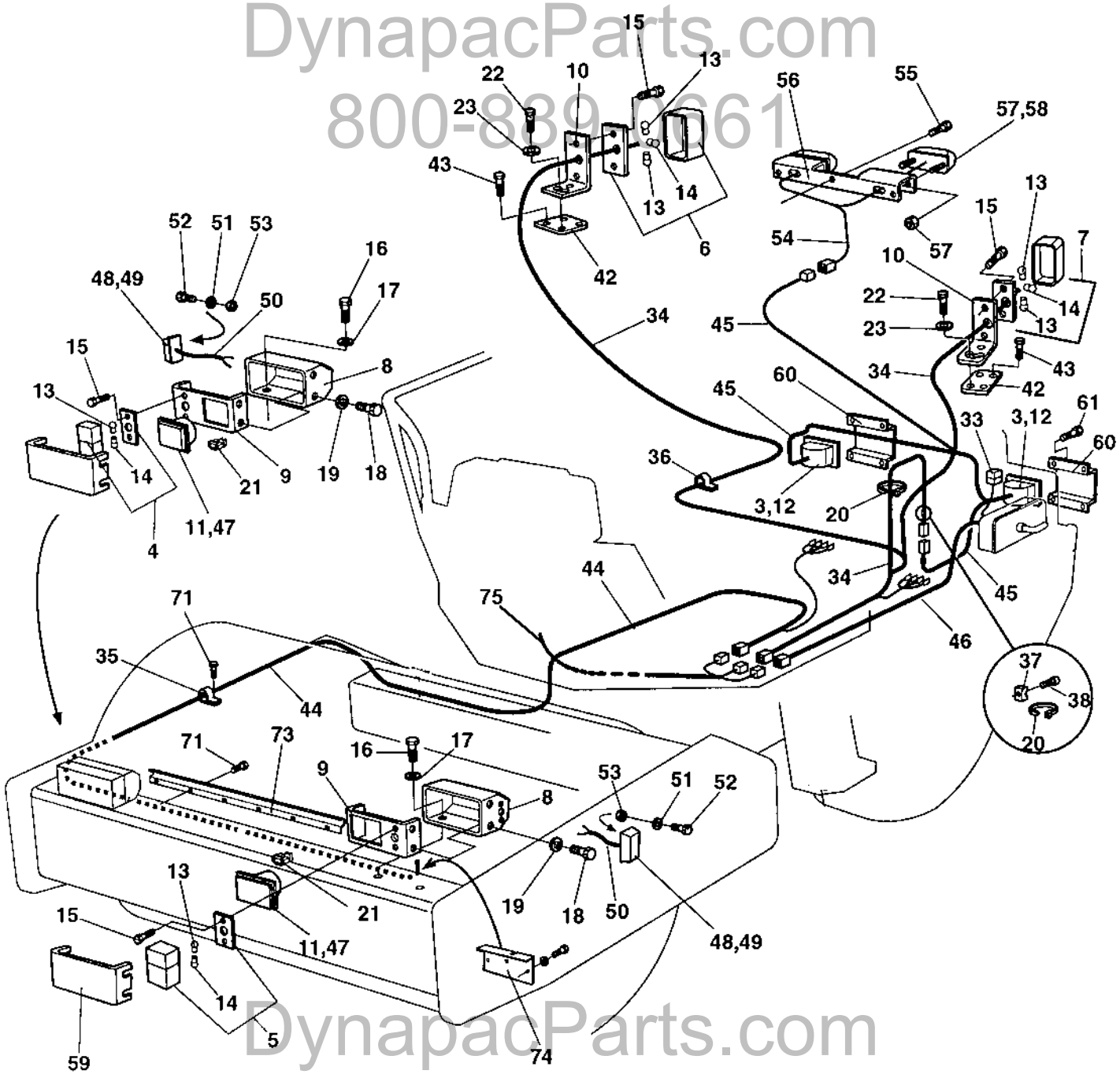

DynapacParts.com
800-889-0661
DynapacParts.com
800-889-0661

Driving lights Option

Ref. No.	Part No.	Rem.	Qty	Description		Code
3	902227		2	Work light		
4	904316	A	1	Direction lamp		
	937107		1	.Lamp glass		
5	904315	B	1	Direction lamp		
	937106		1	.Lamp glass		
6	904318	C	1	Direction lamp		
	937109		1	.Lamp glass		
7	904317	D	1	Direction lamp		
	937108		1	.Lamp glass		
8	374029		2	Lamp shield		
9	374030		2	Bracket		
10	374089		2	Bracket		
11	900790		2	Bulb	60/55w H4	B
12	901369		2	Bulb	55w H3	B
13	928502		6	Bulb	21w	B
14	985014		4	Bulb	5w	B
15	533010		8	Screw		
16	500043		6	Screw		
17	904230		6	Washer		
18	500040		8	Screw		
19	904228		8	Washer		
20	925802		11	Cable ties	L=142 mm	
21	903899		2	Connector		
22	500019		4	Screw		
23	904229		4	Washer		
27	541703		14	Screw	M6x16	
28	313041		N	Cable ties	L=186 mm	
33	904038		1	Fuse	40A	D
34	374168		1	Cable harness		
35	921028		6	Clamp		
36	921028		6	Clamp		
37	904543		3	Cable tie holder		
38	903852		3	Screw	ST4,2x13	
42	374088		2	Holder plate		
43	513009		4	Screw		
44	374194		1	Cable harness		
45	374195		1	Cable harness		
46	373184		1	Cable harness		
47	902066		2	Headlight		
	904313	E	2	Headlight		
48	902064		2	Direction lights		
49	985013		2	Bulb	12V,5W	B
50	374526		2	Cable harness		
51	904281		4	Washer		
52	926611		4	Screw		
53	586001		4	Lock nut		
54	374196		1	Cable harness		
55	903969		3	Screw	ST4,8x19 Black	
56	374184		1	Licence plate light bracket		
57	929455		2	Licence plate light		
58	985013		2	Bulb	12V,5W	B
59	374120		2	Protecting cover		
60	374327		2	Protecting cover		
61	541535		8	Screw		
71	500012		9	Screw		

DynapacParts.com
800-889-0661
DynapacParts.com
800-889-0661

A) Front right
B) Front left
C) Rear right
D) Rear left
E) Left hand asymmet.

Driving lights Option

17488

DynapacParts.com
800-889-0661

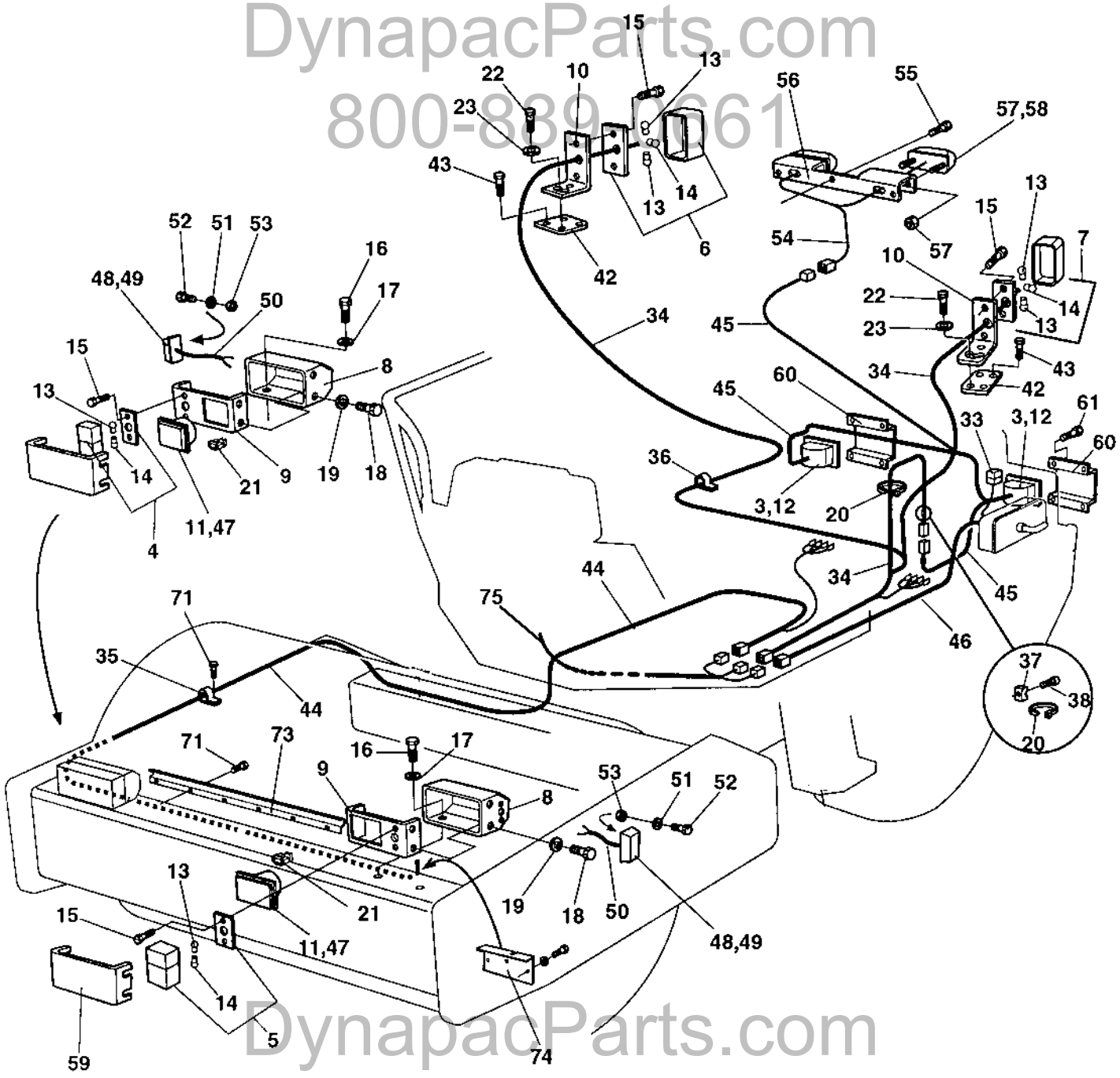

DynapacParts.com
800-889-0661

Driving lights Option

Ref. No.	Part No.	Rem.	Qty	Description	Code
73	384162		1	Cable holder	
74	384163		2	Protection	
75	385263		1	Cable harness	

DynapacParts.com
800-889-0661

DynapacParts.com
800-889-0661

Working lights Option

17505

DynapacParts.com
800-889-0661

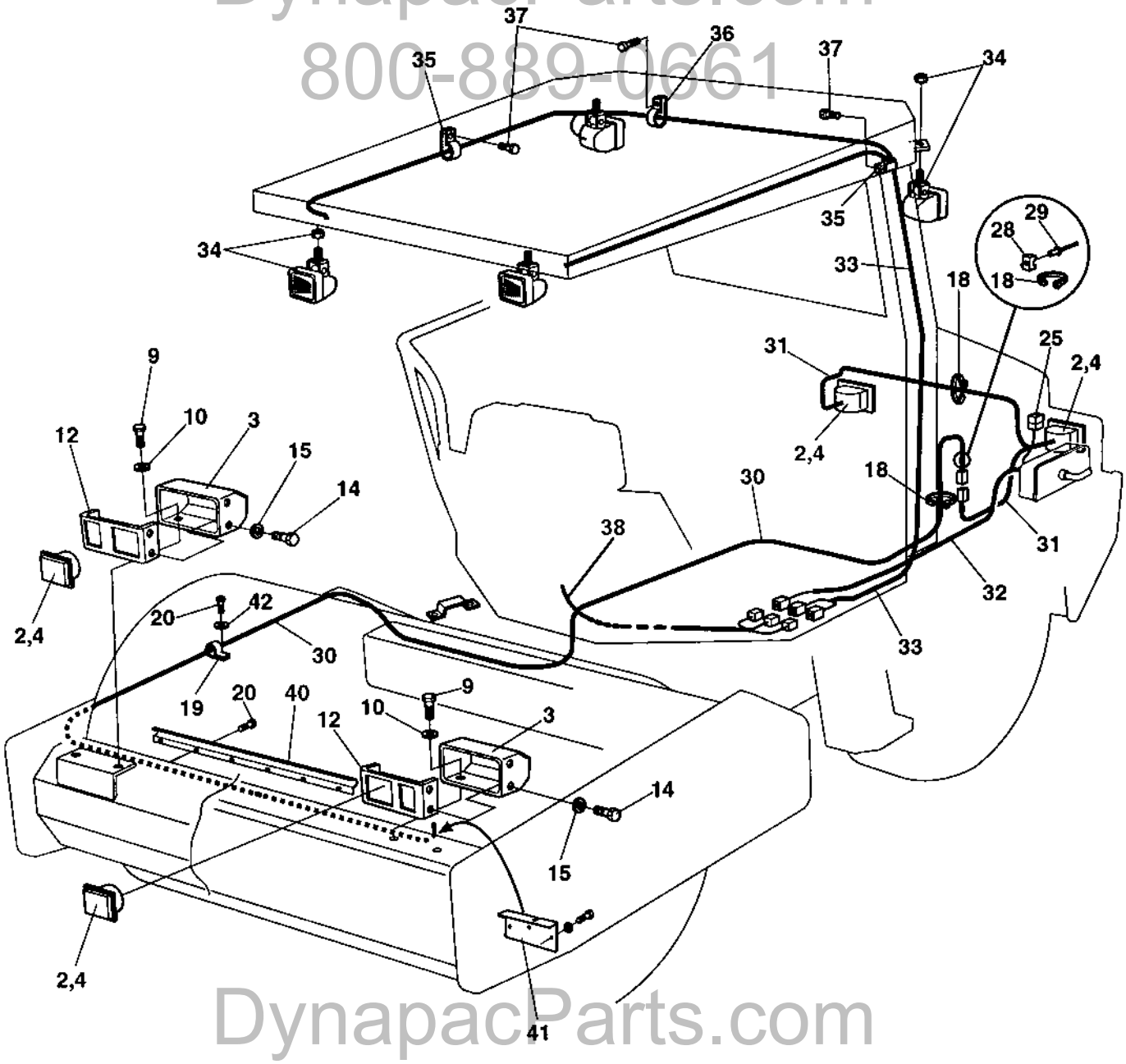

DynapacParts.com
800-889-0661

Working lights Option

Ref. No.	Part No.	Rem.	Qty	Description		Code
2	902227		4	Work light		
3	374029		2	Lamp shield		
4	901369		4	Bulb	55w H3	B
9	500043		6	Screw		
10	904230		6	Washer		
11			0	Not used on this model		
12	374030		2	Bracket		
14	500040		8	Screw		
15	904228		9	Washer		
18	925802		9	Cable ties	L=142 mm	
19	921039		12	Pipe clamp		
20	500012		12	Screw		
25	904038		1	Fuse	40A	D
28	904543		3	Cable tie holder		
29	903852		3	Screw	ST4,2x13	
30	373359		1	Cable harness		
31	373360		1	Cable harness		
32	373184		1	Cable harness		
33	372758		1	Cable harness		
34	904314		4	Work lamp		
35	921039		10	Pipe clamp		
36	921031		3	Clamp		
37	541702		13	Screw	M6x12	
38	372759		1	Cable harness		
40	384162		1	Cable holder		
41	384163		2	Protection		
42	904228		12	Washer		

DynapacParts.com
800-889-0661

DynapacParts.com
800-889-0661

Rotating beacon Option

16850

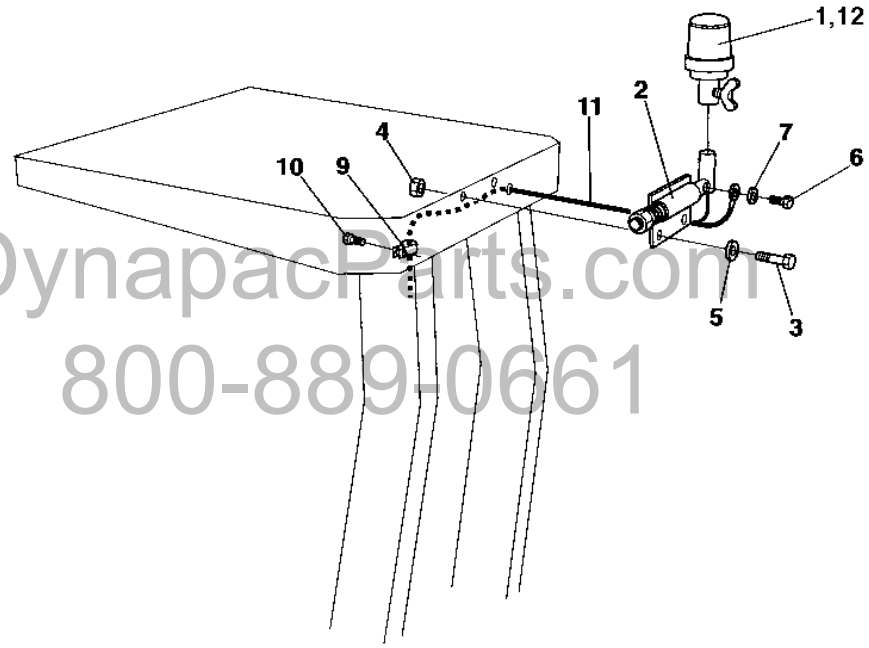

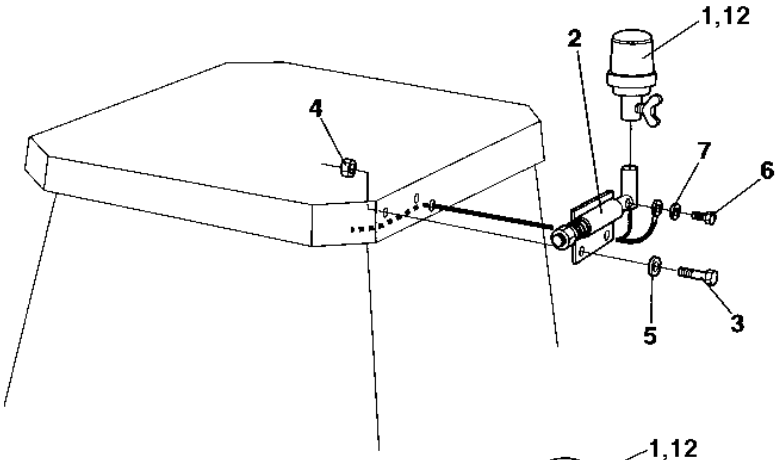

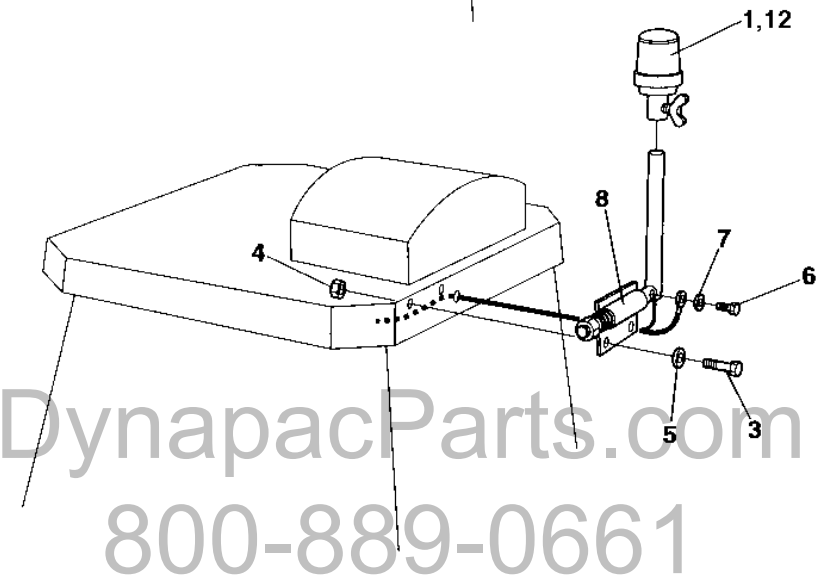

DynapacParts.com
800-889-0661
DynapacParts.com
800-889-0661

Rotating beacon Option

Ref. No.	Part No.	Rem.	Qty	Description	Code
1	999011	1	1	Rotating beacon	D
2	358452		1	Lamp holder	
3	500021		2	Screw	
4	586003		2	Lock nut	
5	904229		2	Washer	
6	500013		1	Screw	
7	904228		1	Washer	
8	371364		1	Lamp holder	
9	921039		1	Pipe clamp	
10	541702		1	Screw M6x12	
11	374398		1	Cable harness	
12	389577	2	1	Rotating beacon	D

1) Replaced by item 12, P/N 389577
2) Replaces item 1, P/N 999011

DynapacParts.com
800-889-0661

DynapacParts.com
800-889-0661

Compaction meter Option

17096

DynapacParts.com
800-889-0661

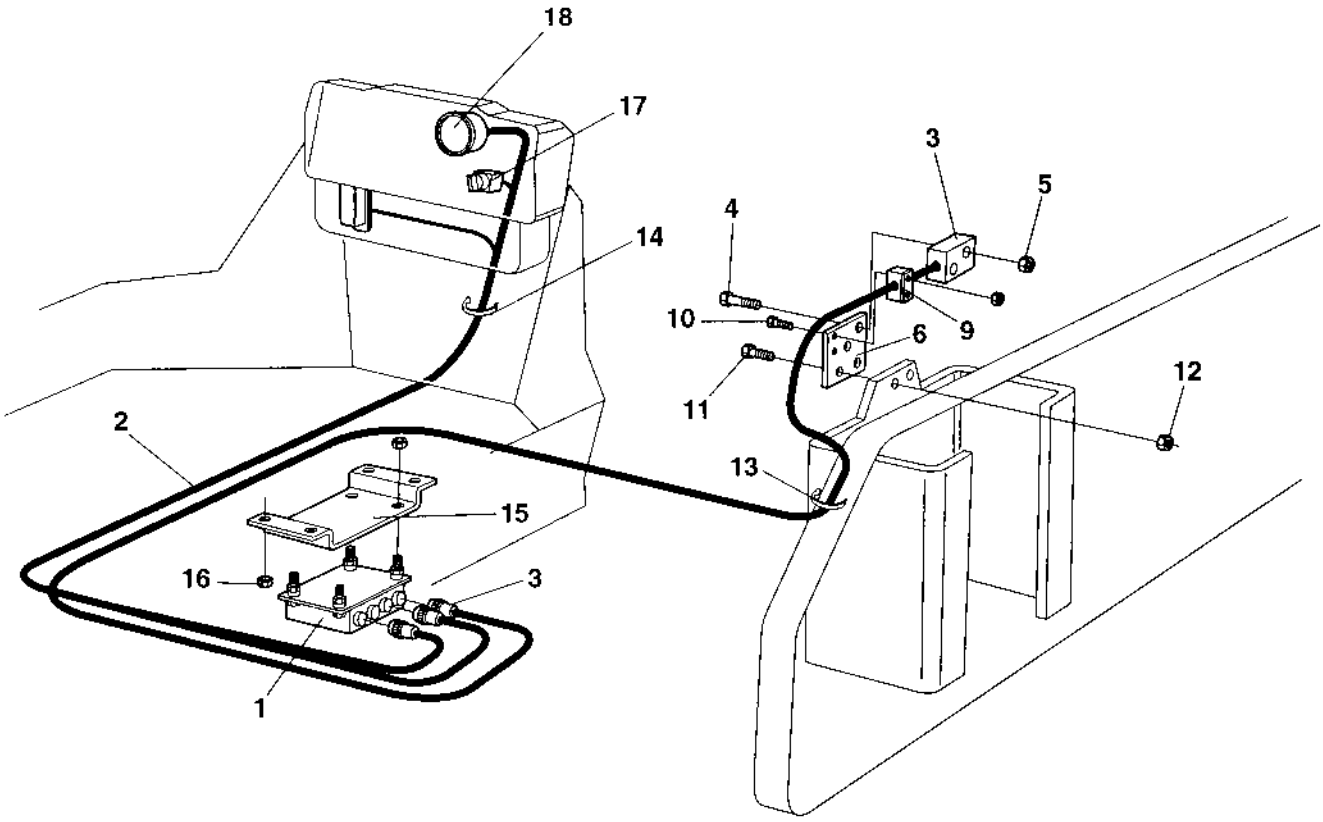

DynapacParts.com
800-889-0661

Compaction meter Option

Ref. No.	Part No.	Rem.	Qty	Description		Code
1	372008		1	Processor comp.meter		
2	372784		1	Cable harness		
3	348213		1	Sensor, cpl		
4	500079		2	Screw	M6-1x50 8,8	
5	902285		4	Lock nut		
6	373140		1	Bracket		
9	902496		1	Clamp		
10	500079		2	Screw	M6-1x50 8,8	
11	500194		2	Screw		
12	902288		2	Nut	M12	
13	313102		15	Cable ties		
14	313041		15	Cable ties	L=186 mm	
15	372836		1	Bracket		
16	902286		4	Lock nut		
17	930151		1	Switch		D
18	383452		1	Compaction meter		
	904890		2	.Lamp holder		
	904889		2	.Bulb		

DynapacParts.com
800-889-0661

DynapacParts.com
800-889-0661

Compaction meter Option

18064

DynapacParts.com
800-889-0661

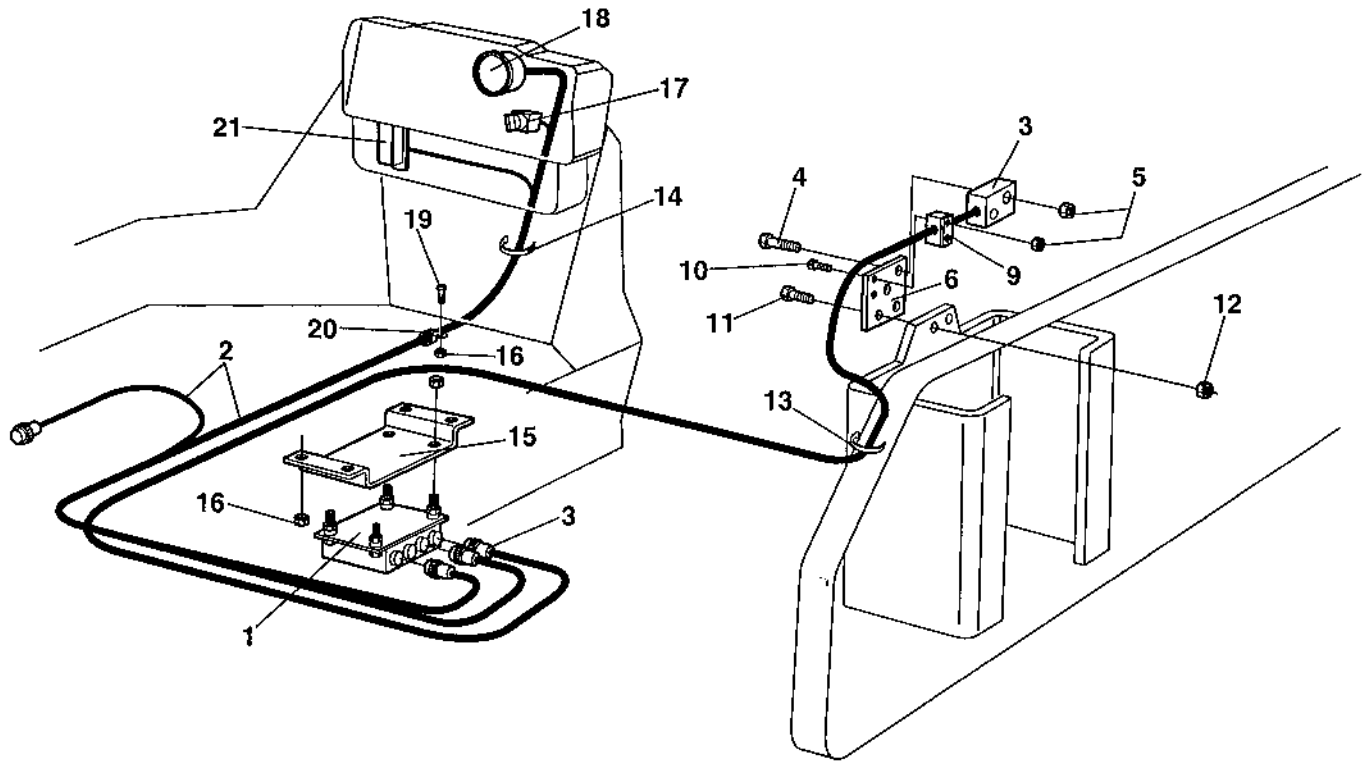

DynapacParts.com
800-889-0661

Compaction meter Option

Ref. No.	Part No.	Rem.	Qty	Description		Code
1	388210		1	Processor comp.meter		
2	388211		1	Cable harness		
3	348213		1	Sensor, cpl		
4	500079		2	Screw	M6-1x50 8,8	
5	902285		4	Lock nut		
6	373140		1	Bracket		
9	902496		1	Clamp		
10	500079		2	Screw	M6-1x50 8,8	
11	500194		2	Screw		
12	902288		2	Nut	M12	
13	313102		15	Cable ties		
14	313041		15	Cable ties	L=186 mm	
15	372836		1	Bracket		
16	902286		5	Lock nut		
17	930151		1	Switch		D
18	383452		1	Compaction meter		
	904890		2	.Lamp holder		
	904889		2	.Bulb		
19	500047		1	Screw	M8-1,25x35 8,8	
20	921072		1	Clamp		
21	901224		1	Fuse	3A	D

DynapacParts.com
800-889-0661

DynapacParts.com
800-889-0661

Speedometer and frequency meter Option

17095

DynapacParts.com
800-889-0661

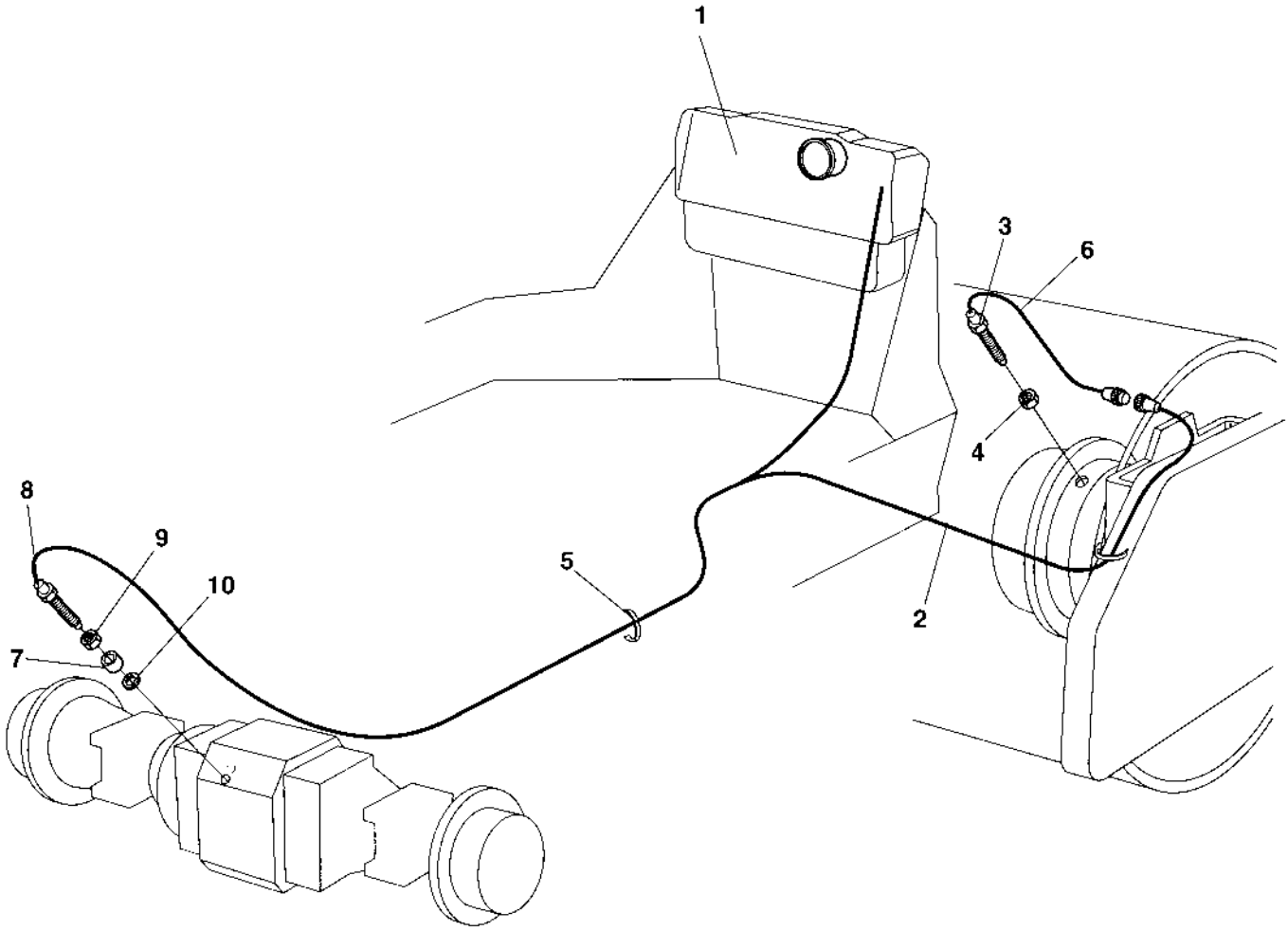

DynapacParts.com
800-889-0661

Speedometer and frequency meter Option

Ref. No.	Part No.	Rem.	Qty	Description		Code
1			1	Control panel		D
2	372205		1	Cable harness		
3	372618	A	1	Sensor	3/4-16	
4	801669		1	.Thru-seal nut		
5	313041		N	Cable ties	L=186 mm	
6	925802		N	Cable ties	L=142 mm	
7	371727		2	Sleeve		
8	384069	B	1	.Sensor		
9	903770		1	.Nut		
10	903769		1	.Sealing		

A) Tacho/Frequency meter
B) Speedometer

DynapacParts.com
800-889-0661

DynapacParts.com
800-889-0661

Speedometer and frequency meter Option

18017

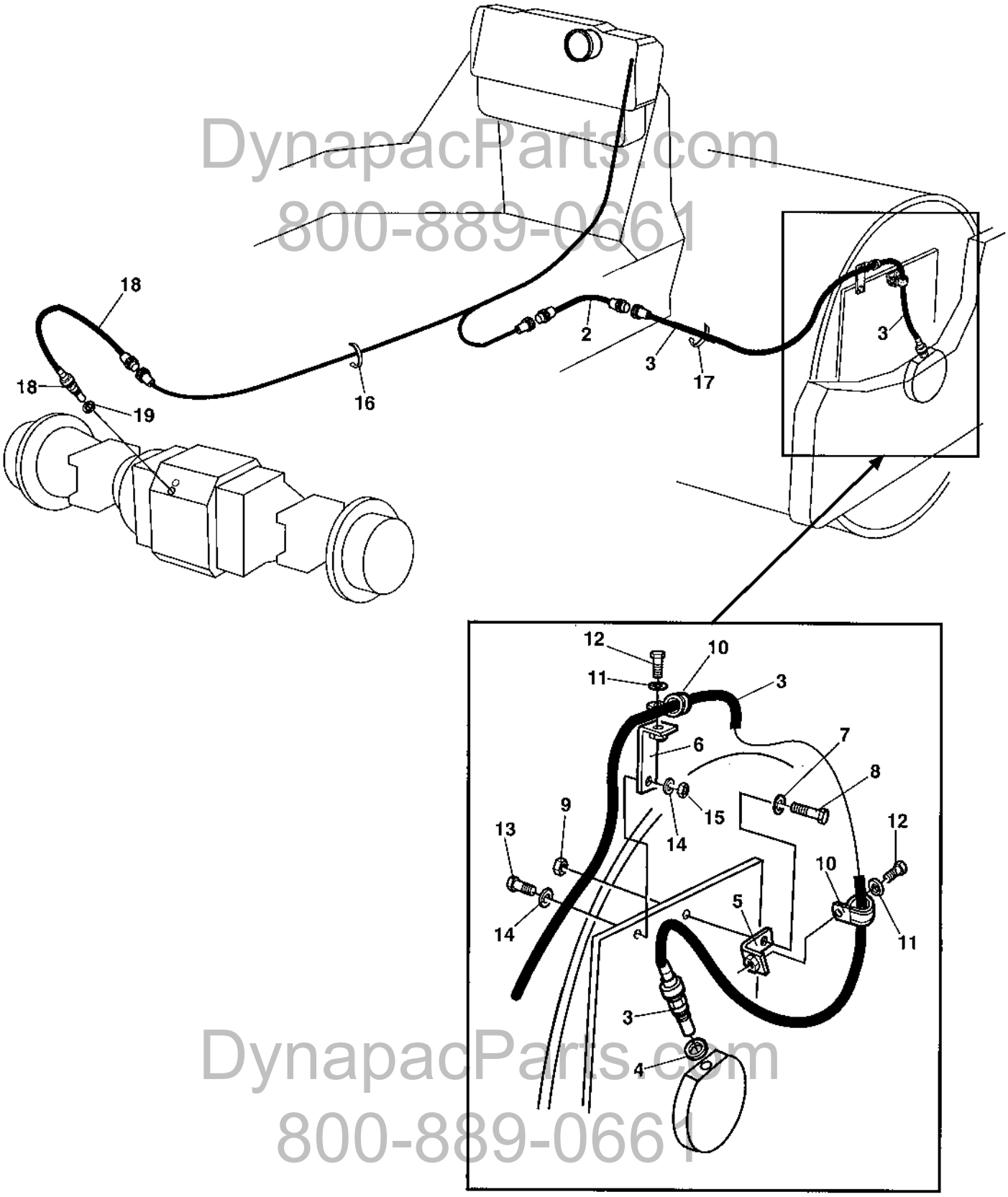

DynapacParts.com
800-889-0661
DynapacParts.com
800-889-0661

Speedometer and frequency meter Option

Ref. No.	Part No.	Rem.	Qty	Description	Code
2	376937		1	Cable harness	
3	376935	A	1	Sensor	
4	801669		1	.Thru-seal nut	
5	376936		1	Holder	
6	376938		1	Holder	
7	904231		1	Washer	
8	500056		1	Screw	
9	586019		1	Lock nut	
10	921078		2	Clamp	
11	904228		2	Washer	
12	500013		2	Screw	
13	500103		1	Screw	M12x60H 8,8
14	904213		2	Washer	
15	570007		1	Hexagon nut	M12
16	313041		N	Cable ties	L=186 mm
17	313102		N	Cable ties	
18	384069	B	1	Sensor	
19	903769		1	.Sealing	

A) Tacho/Frequency meter
B) Speedometer

DynapacParts.com
800-889-0661

DynapacParts.com
800-889-0661

Tachograph Option

17127

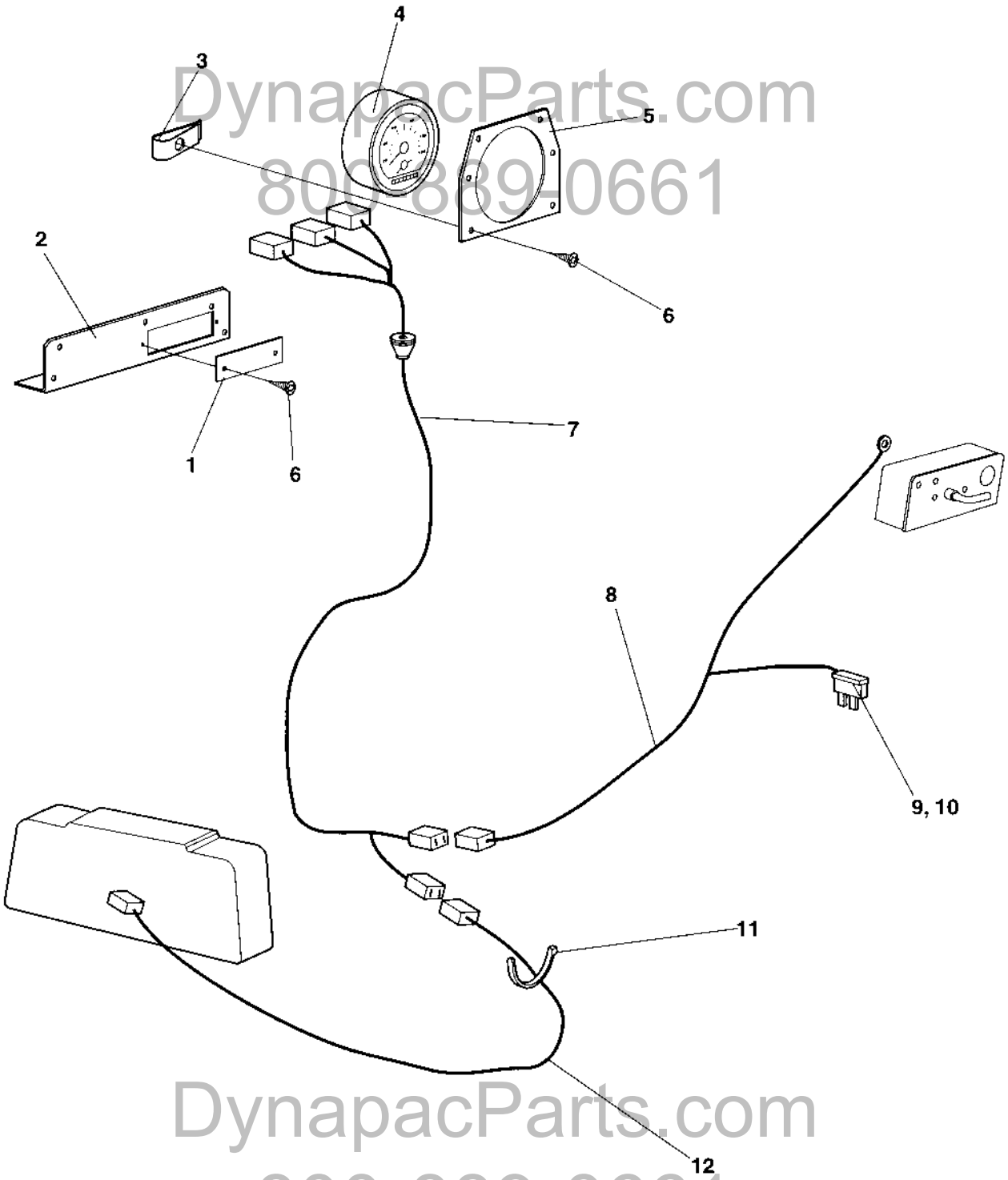

DynapacParts.com
800-889-0661

Tachograph Option

Ref. No.	Part No.	Rem.	Qty	Description		Code
1	374463		1	Cover plate		
2	935603		1	Cover plate		
3	904775		14	Quick lock nut		
4	901209		1	Tachograph		
5	372967		1	Holder plate		
6	903969		16	Screw	ST4,8x19 Black	
7	372497		1	Cable harness		
8	372495		1	Cable harness		
9	904015		1	.Fuse holder		
10	904140		1	.Fuse	0.5A	
11	313041		10	Cable ties	L=186 mm	
12	372496		1	Cable harness		

DynapacParts.com
800-889-0661

DynapacParts.com
800-889-0661

Tachograph, platform Option

17805

DynapacParts.com
800-889-0661

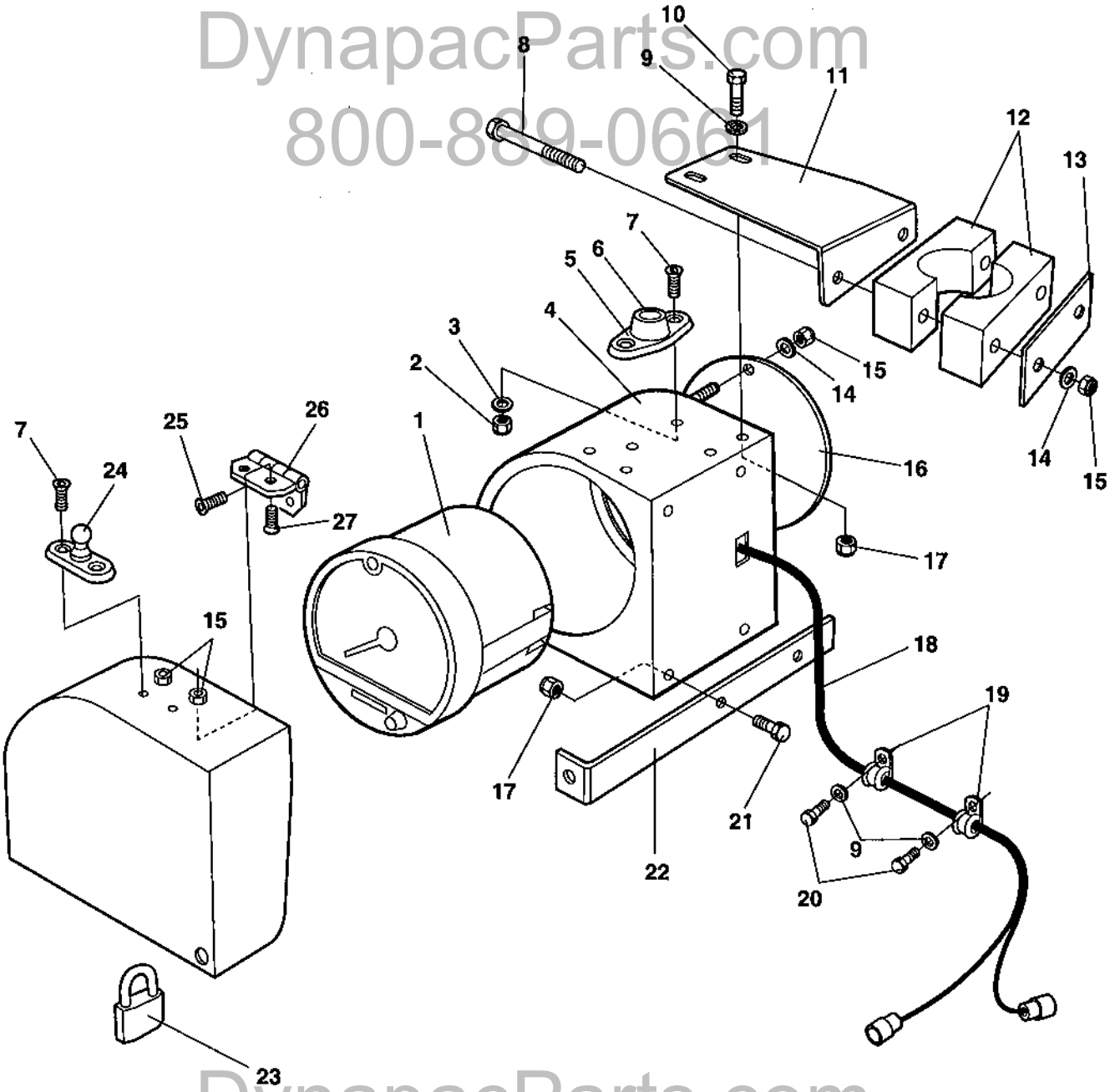

DynapacParts.com
800-889-0661

Tachograph, platform Option

Ref. No.	Part No.	Rem.	Qty	Description		Code
1	901209		1	Tachograph		
2	923976		4	Nut		
3	904698		4	Washer		
4	355132		1	Tachograph box		
5	904907		1	Door bumper		
6	904908		1	Rubber part		
7	535004		4	Screw	M4x16	
8	500292		2	Screw	M6x75	
9	904281		12	Washer		
10	500006		2	Screw	M5x16	
11	382549		1	Bracket		
12	904340		1	Pipe clamp		
13	924791		1	Cover plate		
14	904228		8	Washer		
15	586002		6	Lock nut		
16	355135		1	Tachograph cover		
17	586001		6	Lock nut		
18	372497		1	Cable harness		
19	921031		3	Clamp		
20	500006		3	Screw	M5x16	
21	500060		1	Screw	M5-0,8x20 8.8	
22	385551		1	Holder plate		
23	358881		1	Pad lock		
24	904909		1	Door bumper		
25	535014		2	Screw		
26	903907		1	Hinge		
27	535013		2	Screw		

DynapacParts.com
800-889-0661

DynapacParts.com
800-889-0661

Tachograph , cab Option

17806

DynapacParts.com
800-889-0661

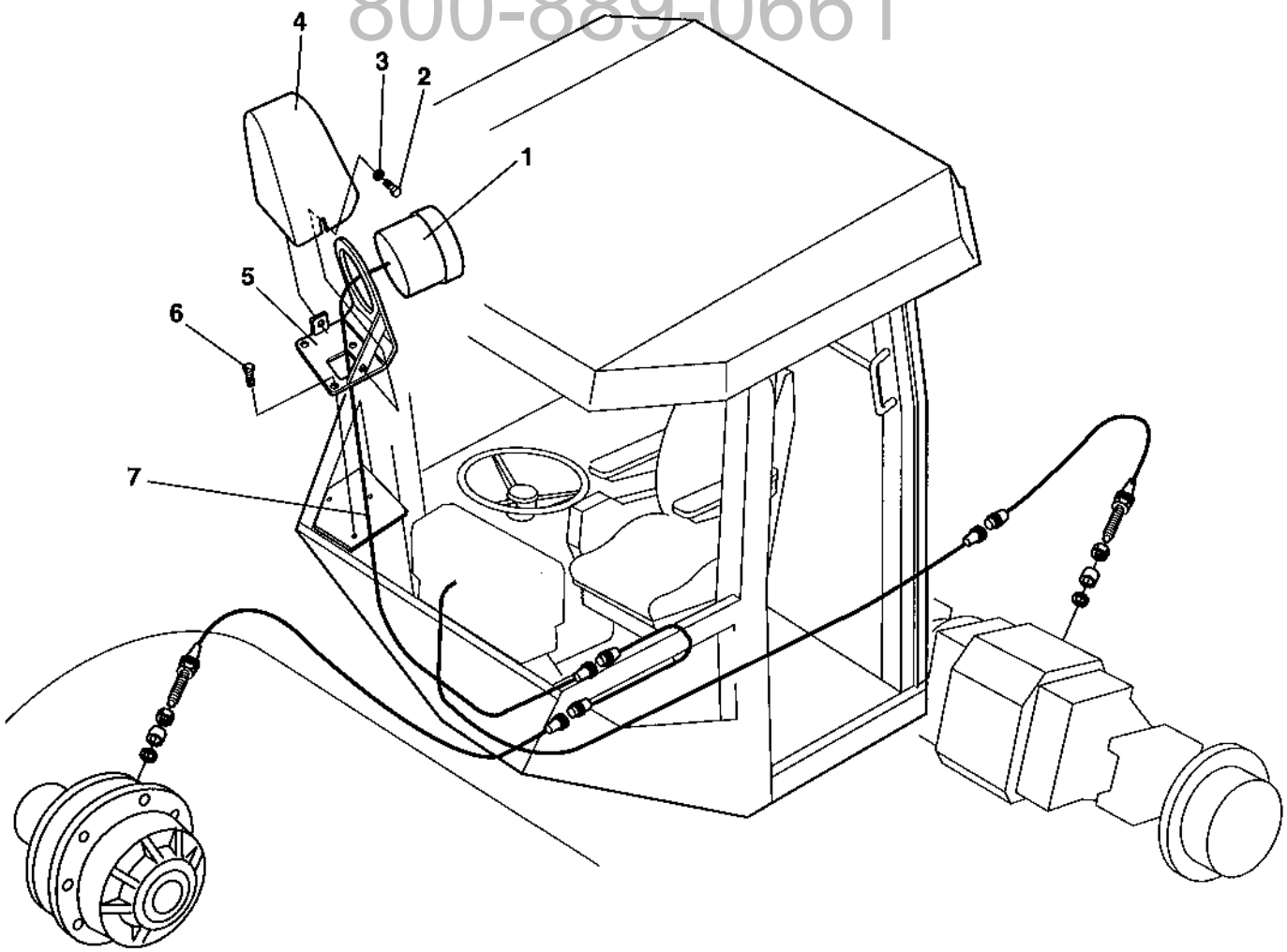

DynapacParts.com
800-889-0661

Tachograph , cab Option

Ref. No.	Part No.	Rem.	Qty	Description	Code
1	901209		1	Tachograph	
2	500004		2	Screw	M5 0,8x12 8,8
3	904281		2	Washer	
4	385527		1	Cover	
5	385526		1	Holder plate	
6	541704		3	Screw	
7	385542		1	Cable harness	

DynapacParts.com
800-889-0661

DynapacParts.com
800-889-0661

Tachograph, simple cab Option

18161

DynapacParts.com
800-889-0661

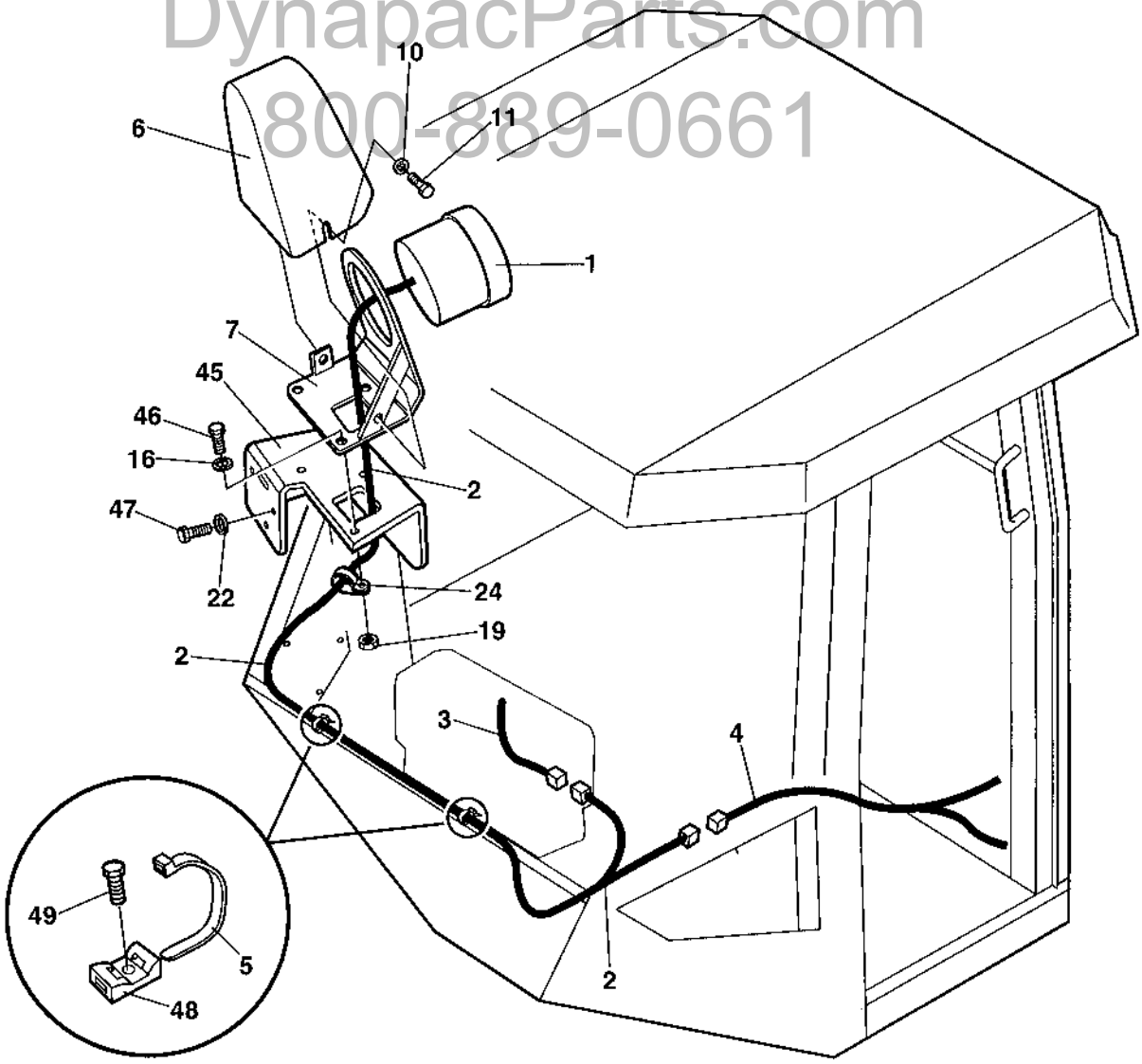

DynapacParts.com
800-889-0661

Tachograph, simple cab Option

Ref. No.	Part No.	Rem.	Qty	Description		Code
1	901209		1	Tachograph		
2	372497		1	Cable harness		
	908496		1	.Grommet		
	903717		1	.Resistor	470 ohm, 0.5w	
3	372496		1	Cable harness		
4	372495		1	Cable harness		
	904015		1	.Fuse holder		
	904140		1	.Fuse	0.5A	
5	313041		N	Cable ties	L=186 mm	
6	385527		1	Cover		
7	385526		1	Holder plate		
10	904281		2	Washer		
11	500004		2	Screw	M5 0,8x12 8,8	
16	904228		3	Washer		
19	586002		1	Lock nut		
22	904229		3	Washer		
24	921031		1	Clamp		
45	378110		1	Bracket		
46	500075		3	Screw	M6-1,0x25 8.8	
47	500053		3	Screw		
48	904543		2	Cable tie holder		
49	903852		2	Screw	ST4,2x13	

DynapacParts.com
800-889-0661

DynapacParts.com
800-889-0661

Back-up alarm Option

17114

DynapacParts.com
800-889-0661

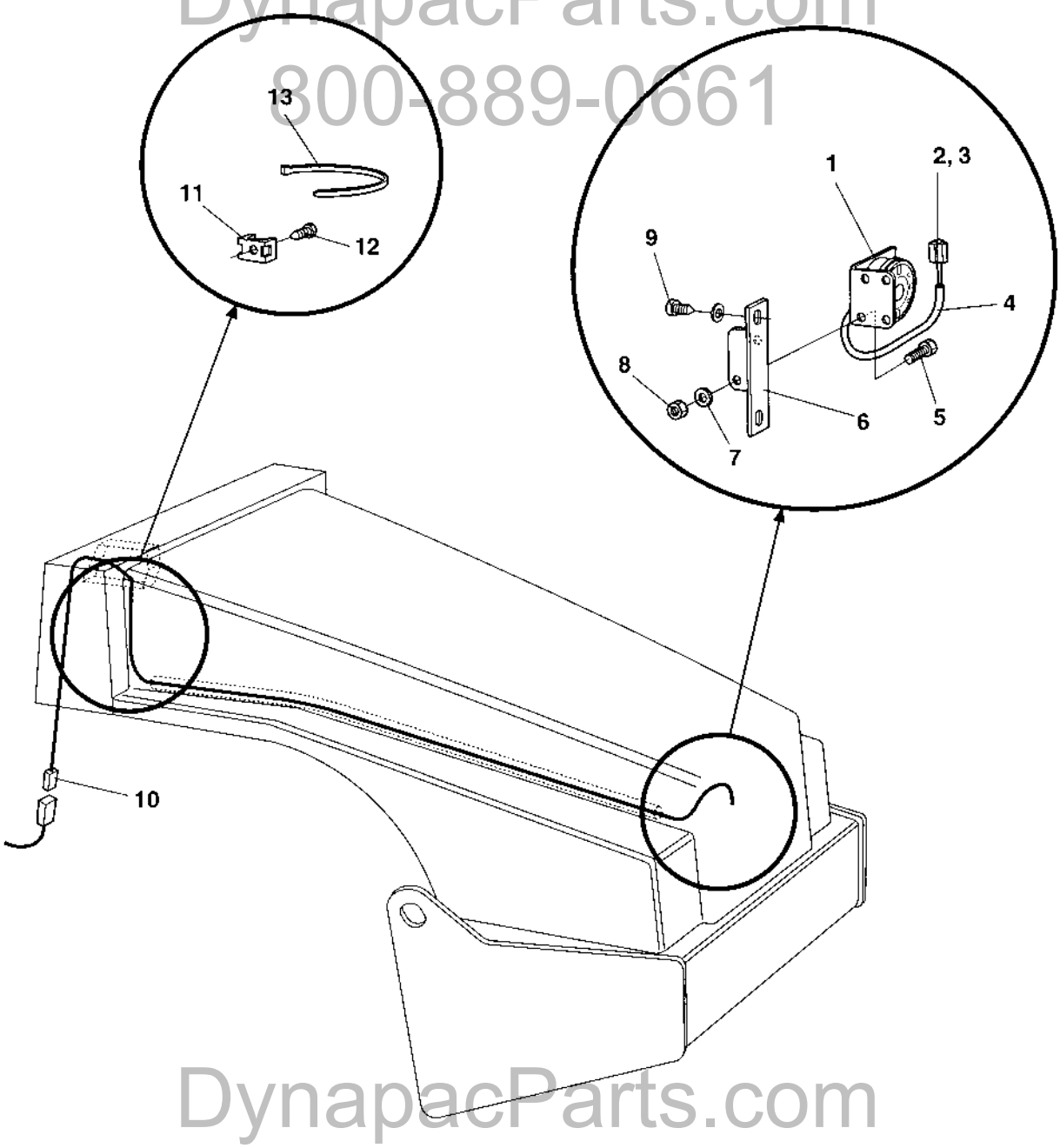

DynapacParts.com
800-889-0661

Back-up alarm Option

Ref. No.	Part No.	Rem.	Qty	Description		Code
1	900798		1	Buzzer		
2	901766		1	Connector	2-POL	D
3	903897		2	Push-on terminal male		
4	244002	A	1	Plastic hose		
5	500004		2	Screw	M5 0,8x12 8,8	
6	374140		1	Bracket		
7	904281		2	Washer		
8	586001		2	Lock nut		
9	903969		2	Screw	ST4,8x19 Black	
10	373286		1	Cable harness		
11	904543		3	Cable tie holder		
12	903852		3	Screw	ST4,2x13	
13	925802		N	Cable ties	L=142 mm	

A) L=150 mm

DynapacParts.com
800-889-0661

DynapacParts.com
800-889-0661

Back-up alarm Option

17983

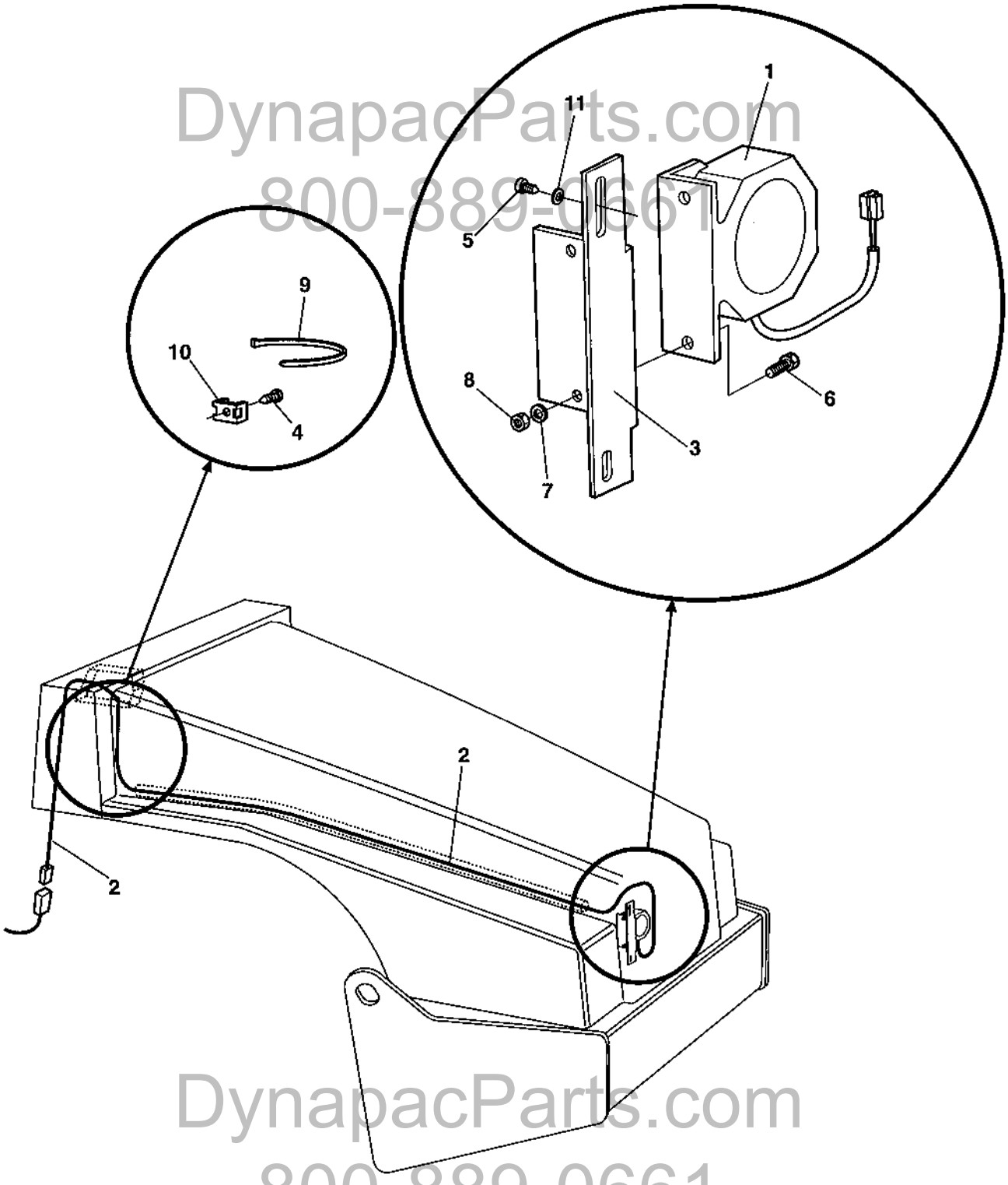

DynapacParts.com
800-889-0661

Back-up alarm Option

Ref. No.	Part No.	Rem.	Qty	Description		Code
1	904910		1	Back-up alarm		
2	373286	A	1	Cable harness		
3	376896		1	Bracket		
4	903852		3	Screw	ST4,2x13	
5	903969		2	Screw	ST4,8x19 Black	
6	500013		2	Screw		
7	904228		2	Washer		
8	586002		2	Lock nut		
9	925802		N	Cable ties	L=142 mm	
10	904543		3	Cable tie holder		
11		B		Existing washer		

A) Not valid for machines equiped with working/driving lights.
B) Use existing washers on grid.

DynapacParts.com
800-889-0661

DynapacParts.com
800-889-0661

Protecting cover, Headlight Option

17344

DynapacParts.com
800-889-0661

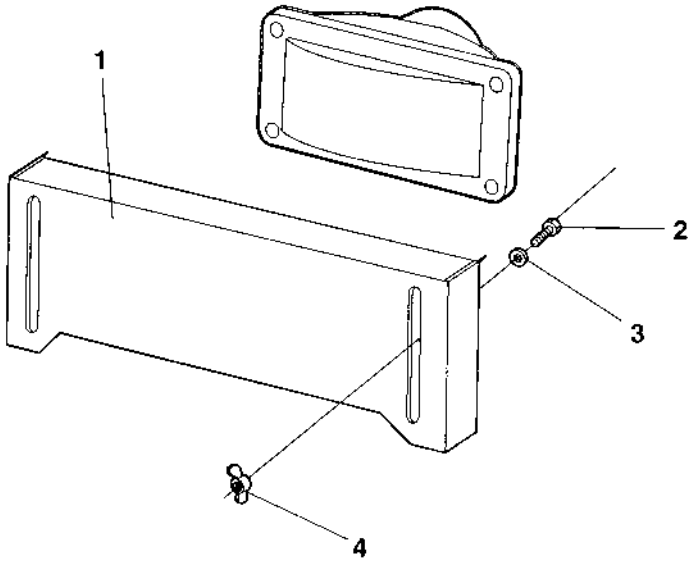

DynapacParts.com
800-889-0661

Protecting cover, Headlight Option

Ref. No.	Part No.	Rem.	Qty	Description	Code
1	376068		1	Protecting plate	
2	500013		2	Screw	
3	904228		2	Washer	
4	582006		2	Wing nut	

DynapacParts.com
800-889-0661

DynapacParts.com
800-889-0661

Field computer assembly Option

17804-2

DynapacParts.com
800-889-0661

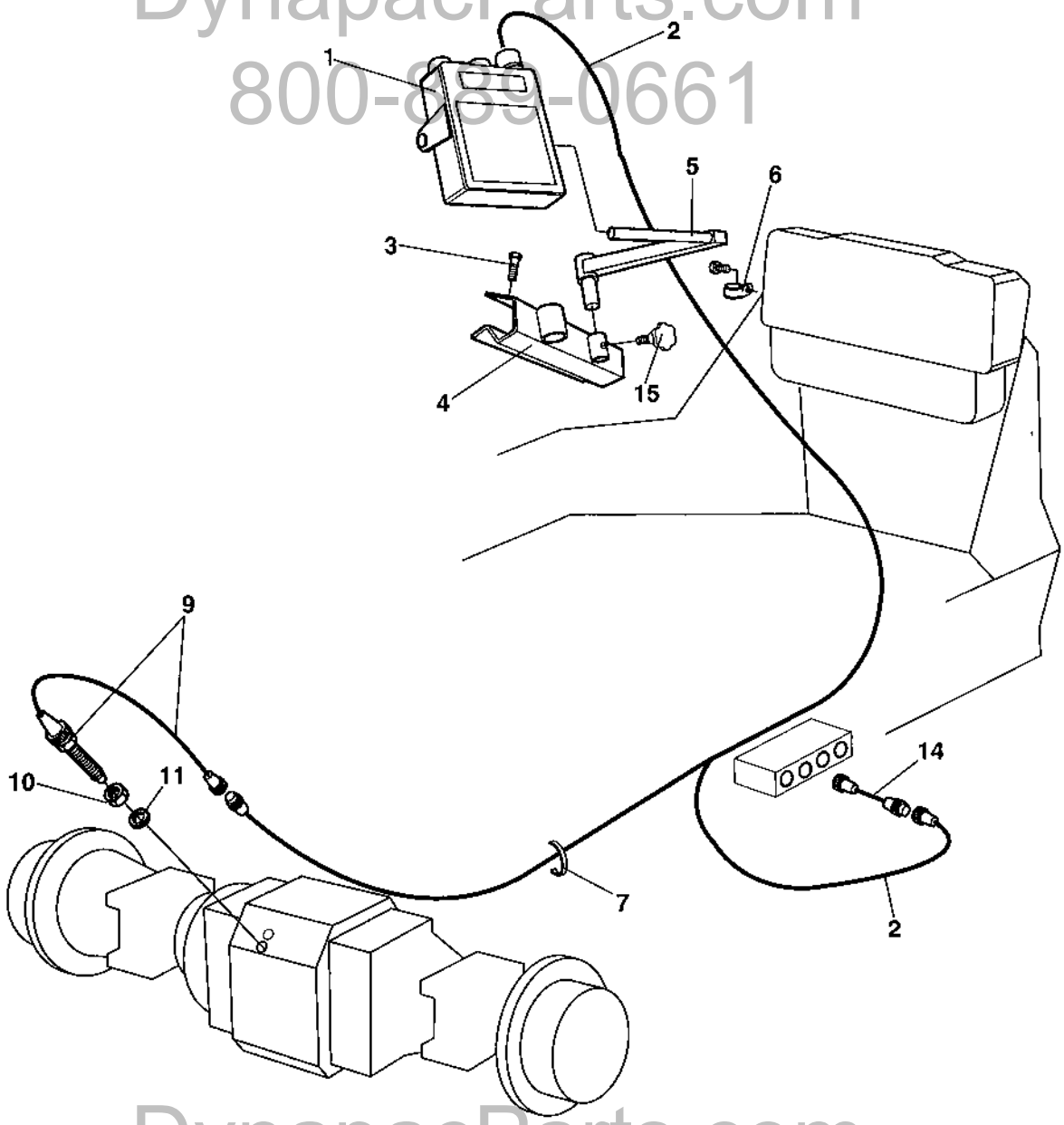

DynapacParts.com
800-889-0661

Field computer assembly Option

Ref. No.	Part No.	Rem.	Qty	Description		Code
1	373860		1	Field computer		
2	384070		1	Cable harness		
3	541703		5	Screw	M6x16	
4	373979		1	Bracket		
5	373980		1	Lever		
6	921065		2	Clamp		
7	313041		N	Cable ties	L=186 mm	
9		A	1	Sensor		
10			1	.Nut		
11			1	.Sealing		
14	389786		1	Cable harness		
15	499162		1	Hand knob		

A) See section "Speedometer and Frequency meter".

DynapacParts.com
800-889-0661

DynapacParts.com
800-889-0661

Compaction Analyzer Option

17913

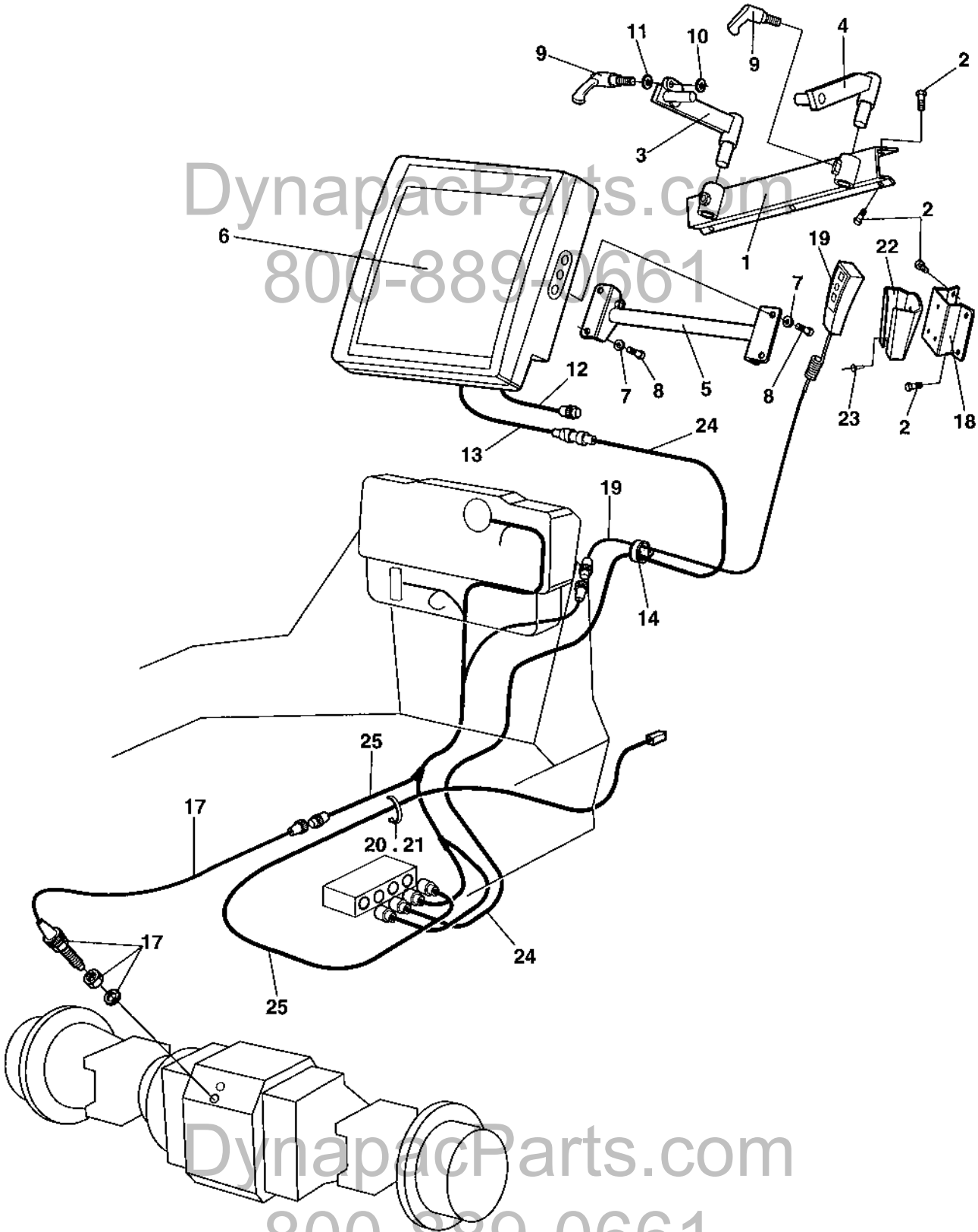

DynapacParts.com
800-889-0661
DynapacParts.com
800-889-0661

Compaction Analyzer Option

Ref. No.	Part No.	Rem.	Qty	Description	Code
1	387968		1	Holder	
2	938686		10	Screw	
3	387969		1	Lever	
4	388189		1	Lever	
5	387571		1	Computer holder	
6	388209		1	Computer	
7	904228		4	Washer	
8	500013		4	Screw	
9	791452		3	Lock handle	
10	904640		1	Washer	
11	904229		1	Washer	
12	388214	A	1	Cable harness	
13	388213		1	Cable harness	
14	921046		5	Clamp	
17		B		Sensor	
18	389591		1	Bracket	
19	388212		1	Control box	
20	313041		N	Cable ties	L=186 mm
21	313102		N	Cable ties	
22	387941		1	Control box holder	
23	624021		3	Pop rivet	
24	389570		1	Cable harness	
25		C		Cable harness	

A) Connected to 12V contact on Cab.
B) See section " Speedometer and Frequency meter".
C) See section "Compaction meter".

DynapacParts.com
800-889-0661

DynapacParts.com
800-889-0661

DynapacParts.com
800-889-0661

DynapacParts.com
800-889-0661

Drivers platform

Ref. No.	Part No.	Rem.	Qty	Description		Code
10				Drivers platform (Page 202)		
16				Drivers platform, for cab (Page 204)		
17				Drivers seat (Page 206)	Standard platform	
21				Drivers seat (Page 208)	Turn-over platform	
26				Drivers seat (Page 210)	Turn-over in cab	
27	359918			Steering column (Page 212)		C
29				Steering system (Page 214)		
30				Turning (Page 216)	Controls	
40				Turning (Page 218)	Carrier	
50				Forward and reverse control (Page 220)		
57				Speed limiter (Page 222)	Option	
60				Engine control Up to 68X10461 (Page 224)		
61				Engine control From 68X10462 (Page 226)		
90				Rops and fops (Page 228)		
96				Cab (Page 230)	383030	
200				Cab (Page 254)	Work lights	
220				Cab (Page 256)	Exterior, rear mirror	
260				Radio and cassette/cd player (Page 258)	Option	
265				Cab, 12V contact From 68X10372 (Page 260)		
270				Rear mirror (Page 262)	Option	
500				Simple Cab mounting (Page 264)	Option	
510				Cab (Page 266)	380656	
520				Cab mounting (Page 280)		
530				Cab (Page 282)	378308	

DynapacParts.com
800-889-0661

DynapacParts.com
800-889-0661

Drivers platform

17754

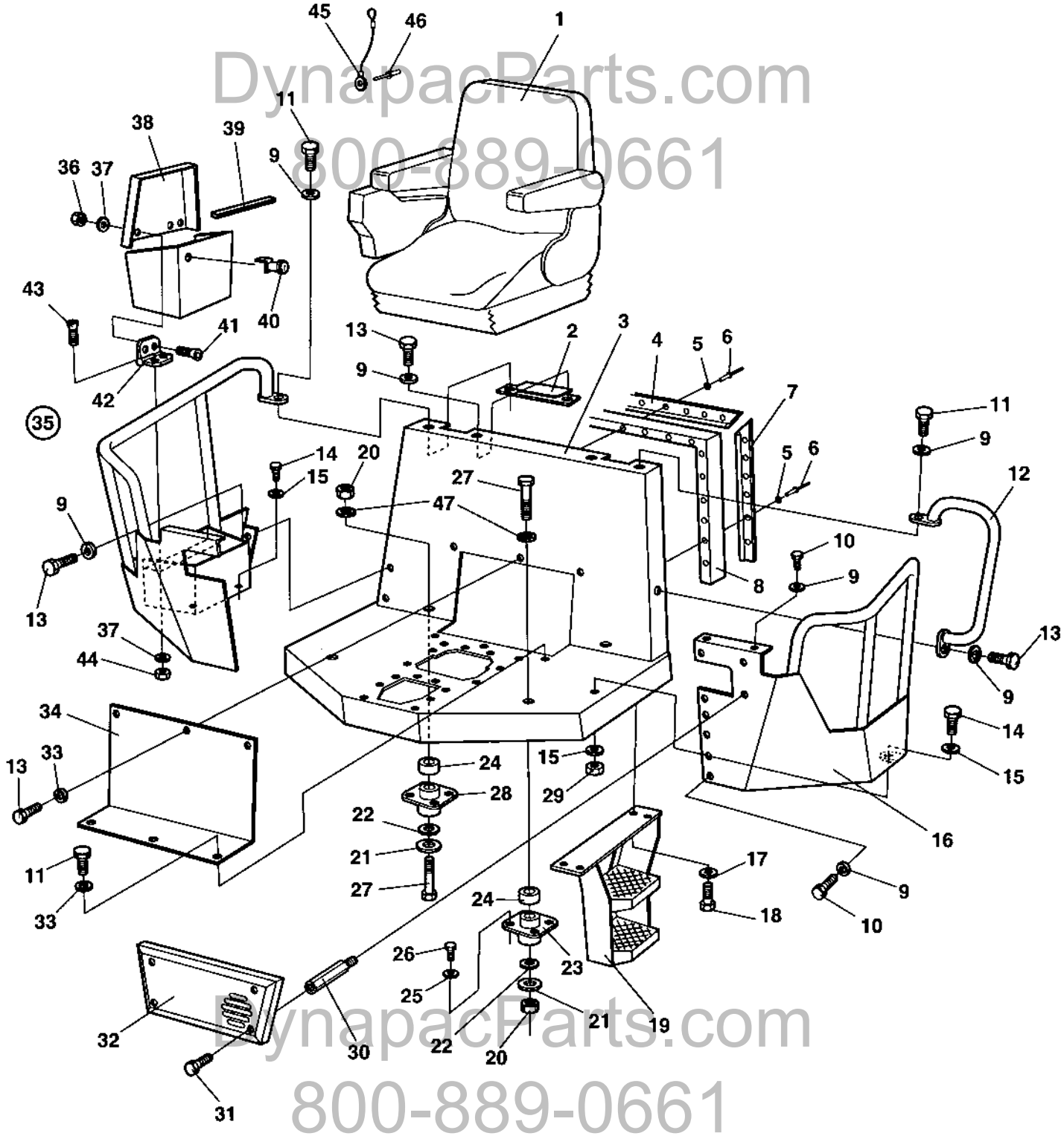

DynapacParts.com
800-889-0661
DynapacParts.com
800-889-0661

Drivers platform

Ref. No.	Part No.	Rem.	Qty	Description		Code
1			1	Drivers seat (Page 206)	Standard platform	
			1	Drivers seat	Turn-over platform	
			1	Forward and reverse control (Page 220)		
			1	Engine control (Page 224)		
2	380727		2	Cover		
3	371100		1	Platform		
4	372785		1	List		
5	927974		13	Washer	5x19x1	
6	904433		13	Blind rivet		
7	372786		2	List		
8	372494	A	1	Rubber strip		
9	904229		22	Washer		
10	500019		7	Screw		
11	500021		7	Screw		
12	371202	B	1	Hand rail		
13	500053		10	Screw		
14	500031		5	Screw		
15	904557		10	Washer		
16	371967	B	1	Operator protection		
17	904230		6	Washer		
18	500029		9	Screw		
19	376252		1	Step		
20	586022		4	Lock nut	M20-8	
21	347512		4	Washer		
22	903290		4	Washer	21x36x6	
23	370255	C	2	Shock absorber		D
24	374471		4	Spacer		
25	904231		16	Washer		
26	500195		16	Screw		
27	500226		4	Screw	M20-2.5x180 8,8	
28	372757	D	2	Shock absorber		D
29	570006		5	Nut		
30	904941		4	Spacer screw		
31	904206		4	Screw		
32	382849		1	Protecting cover		
33	904640		18	Washer		
34	372053		1	Cover		
35	371966	E	1	Operator protection		
36	581018		4	.Nut		
37	904228		8	.Washer		
38	376079		1	.Cover		
39	202028	F	1	.Edge trim		
40	376118		1	.Lock		
	902866		2	..Key	Marked "455"	D
41	535013		4	.Screw		
42	903907		2	.Hinge		
43	535015		4	.Screw		
44	586002		4	.Lock nut		
45	384584		1	Wire		
46	904855		1	Blind rivet		
47	904233		4	Washer		

DynapacParts.com
800-889-0661

A) L = 2.400 m
B) Left
C) Front
D) Rear
E) Right
F) L=0,736 m

DynapacParts.com
800-889-0661

Drivers platform, for cab

17650-1

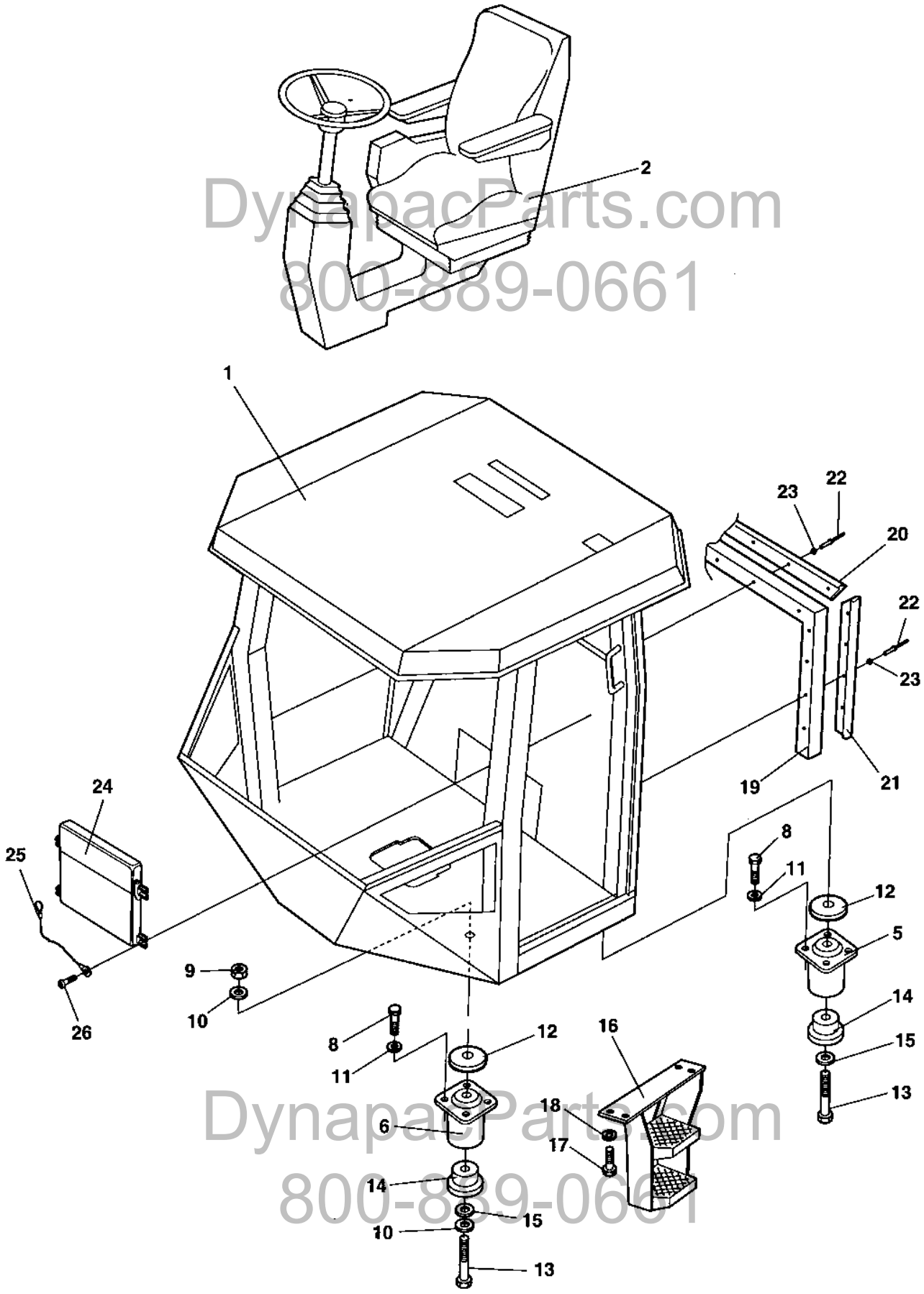

DynapacParts.com
800-889-0661

Drivers platform, for cab

Ref. No.	Part No.	Rem.	Qty	Description		Code
1			1	Cab (Page 230)	383030	
2				Drivers seat (Page 210)	Turn-over in cab	
				Forward and reverse control (Page 220)		
				Engine control (Page 224)		
5	374606		2	Shock absorber	Green	D
6	374607		2	Shock absorber	Yellow	D
8	500195		16	Screw		
9	901145		4	Lock nut	M20-10	
10	904233		6	Washer		
11	904231		16	Washer		
12	384759		4	Spacer		
13	791218		4	Screw	M20x200	
14	372457		4	Back-up ring		
15	903290		4	Washer	21x36x6	
16	376252		1	Step		
17	500029		6	Screw		
18	904230		6	Washer		
19	372494	A	1XL	Rubber strip		
20	372785		1	List		
21	372786		2	List		
22	904433		13	Blind rivet		
23	927974		13	Washer	5x19x1	
24	383705		1	Instruction book holder		
25	357643		1	Wire		
26	791226		4	Screw		

A) L = 2,400 m

DynapacParts.com
800-889-0661

DynapacParts.com
800-889-0661

Drivers seat Standard platform

16010-1

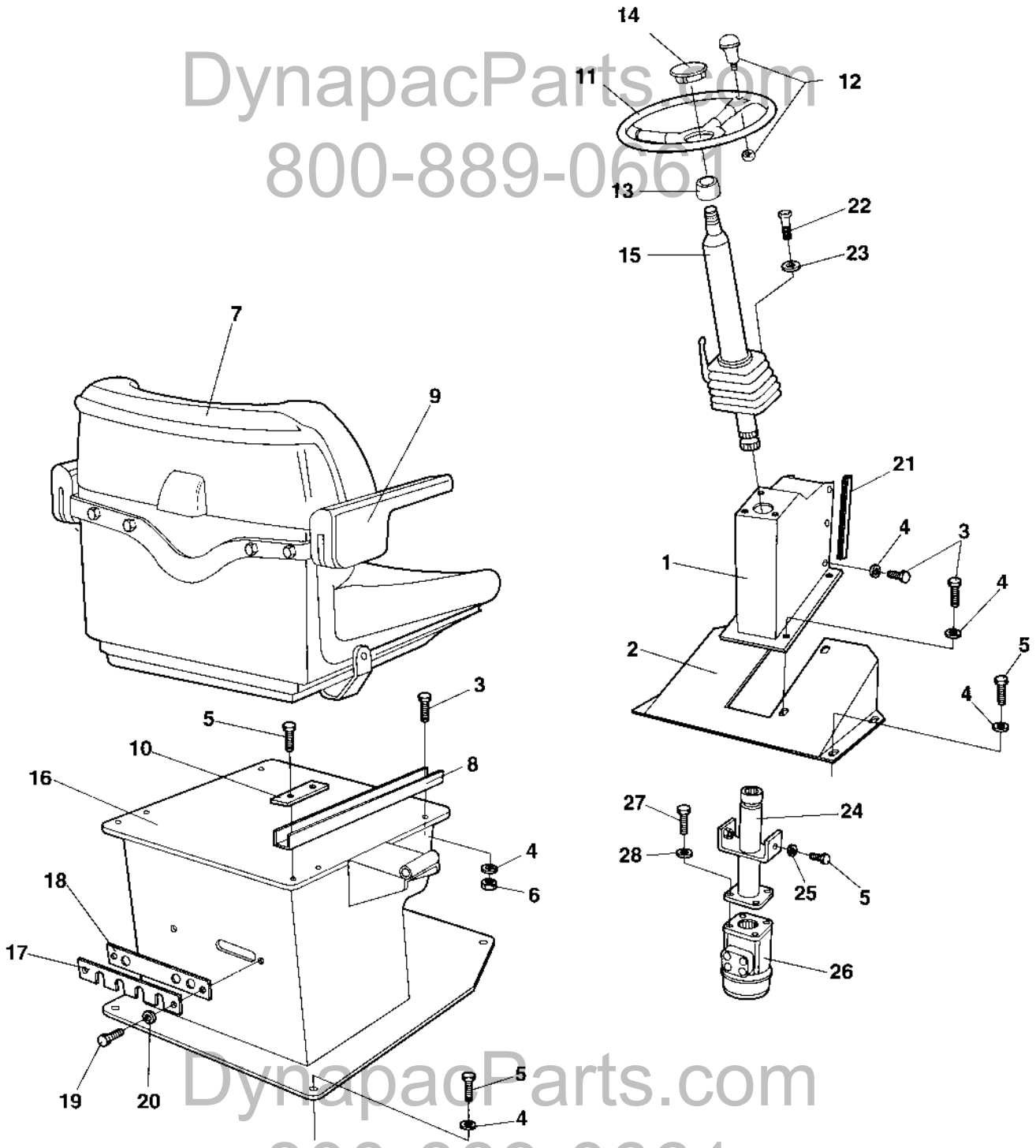

DynapacParts.com
800-889-0661
DynapacParts.com
800-889-0661

Drivers seat Standard platform

Ref. No.	Part No.	Rem.	Qty	Description		Code
1	371968		1	Steering console		
2	371213		1	Foot rest		
3	500053		12	Screw		
4	904229		24	Washer		
5	500021		14	Screw		
6	570005		6	Nut		
7	370234		1	Drivers seat		
8		A	1	Slide rail		
9			1	Arm rest, left		
			1	Arm rest, right		
10	370235		2	Holder plate		
11	372964		1	Steering wheel, cpl		
			1	.Steering wheel		
12	935614		1	.Turning knob		D
13			1	.Insert adapter		D
14	935613		1	.Cover		
15	359918		1	Steering column (Page 212)		C
16	371270		1	Seat frame		
17	359914		1	Cover		
18	359915		1	Grommet		
19	500075		2	Screw	M6-1,0x25 8.8	
20	904228		2	Washer		
21	202028	B	2XL	Edge trim		
22	500029		3	Screw		
23	904557		3	Washer		
24	370977		1	Linkage shaft		
25	904640		2	Washer		
26			1	Steering valve		
27	502034		4	Screw	UNC 3/8 - 16	
28	904230		4	Washer		

A) One pair
B) L = 0.290 m

DynapacParts.com
800-889-0661

DynapacParts.com
800-889-0661

Drivers seat Turn-over platform

17036

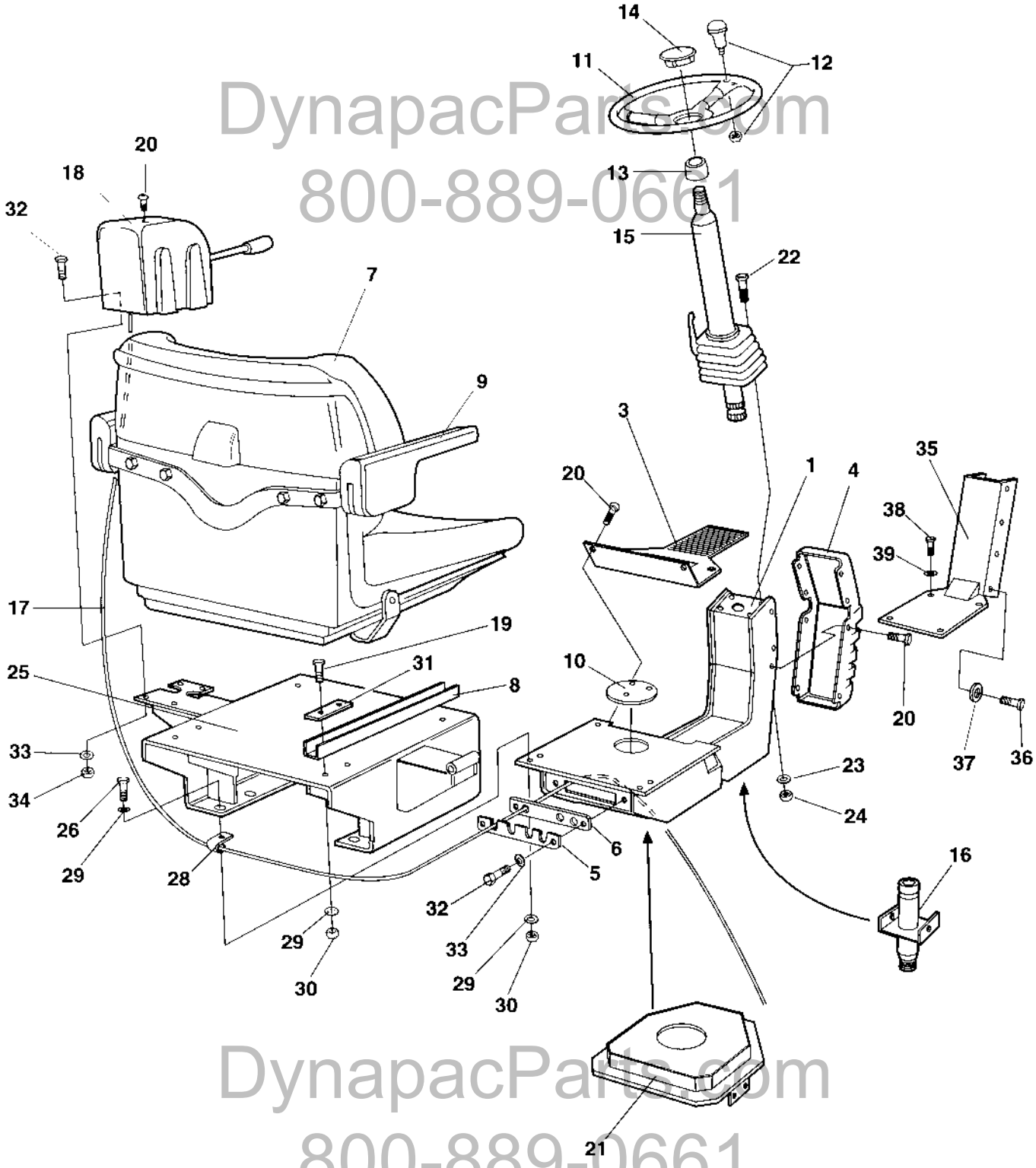

DynapacParts.com
800-889-0661
DynapacParts.com
800-889-0661

Drivers seat Turn-over platform

Ref. No.	Part No.	Rem.	Qty	Description		Code
1	359900		1	Seat frame		
3	381400		1	Bearing cover		
4	359574		1	Cover		
5	359914		1	Cover		
6	359915		1	Grommet		
7	370234		1	Drivers seat		
8		A	1	Slide rail		
9			1	Arm rest, left		
			1	Arm rest, right		
10	359920		1	Plug		
11	372964		1	Steering wheel, cpl		
			1	.Steering wheel		
12	935614		1	.Turning knob		D
13			1	.Insert adapter		D
14	935613		1	.Cover		
15	359918		1	Steering column (Page 212)		C
16			1	Steering system (Page 214)		
17			1	Turning (Page 216)	Controls	
18	359419		1	Control cover		
19	500053		6	Screw		
20	904206		16	Screw		
21			1	Turning (Page 218)	Carrier	
22	500028		3	Screw		
23	904557		3	Washer		
24	570006		3	Nut		
25	370211		1	Seat frame		
26	500021		6	Screw		
27	603019		6	Washer		
28	921104		1	Clamp		
29	904229		18	Washer		
30	570005		12	Nut		
31	370235		2	Holder plate		
32	500040		6	Screw		
33	904228		6	Washer		
34	586002		4	Lock nut		
35	371407		1	Cover		
36	500019		8	Screw		
37	904229		12	Washer		
38	500021		4	Screw		
39	904229		1	Washer		
100	348331		1	Seat cover		D

A) One pair

DynapacParts.com
800-889-0661

DynapacParts.com
800-889-0661

Drivers seat Turn-over in cab

17037

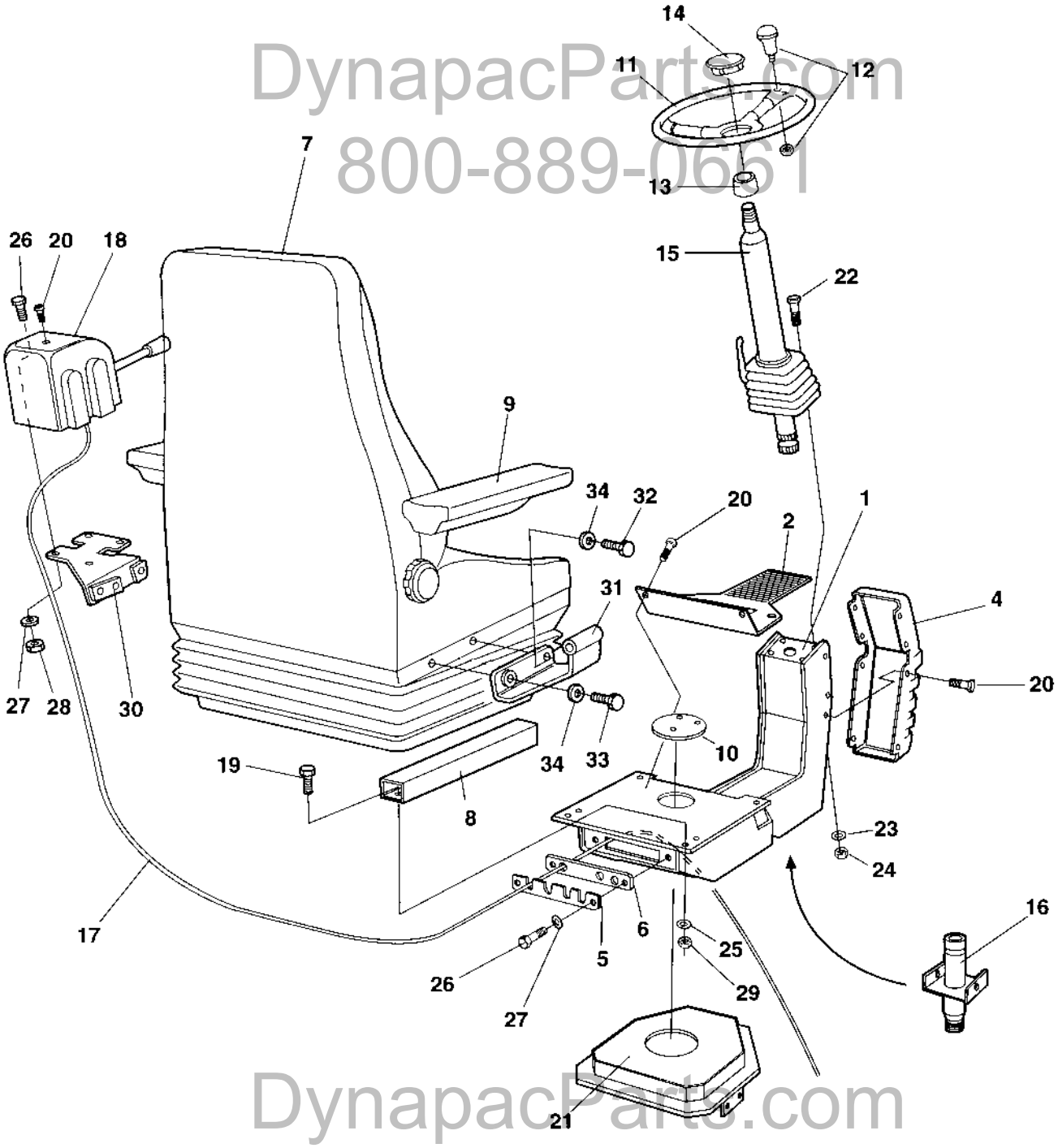

DynapacParts.com
800-889-0661
DynapacParts.com
800-889-0661

Drivers seat Turn-over in cab

Ref. No.	Part No.	Rem.	Qty	Description		Code
1	359900		1	Seat frame		
2	381400		1	Bearing cover		
4	359574		1	Cover		
5	359914		1	Cover		
6	359915		1	Grommet		
7	359917		1	Drivers seat		
8		A	1	Slide rail		
9			1	Arm rest, left		
			1	Arm rest, right		
10	359920		1	Plug		
11	372964		1	Steering wheel, cpl		
			1	.Steering wheel		
12	935614		1	.Turning knob		D
13			1	.Insert adapter		D
14	935613		1	.Cover		
15	359918		1	Steering column (Page 212)		C
16			1	Steering system (Page 214)		
17			1	Turning (Page 216)	Controls	
18	359419		1	Control cover		
19	500053		6	Screw		
20	904206		14	Screw		
21			1	Turning (Page 218)	Carrier	
22	500028		3	Screw		
23	904557		3	Washer		
24	570006		3	Nut		
25	904229		6	Washer		
26	500040		6	Screw		
27	904228		6	Washer		
28	586002		4	Lock nut		
29	570005		6	Nut		
30	359972		1	Control cable holder		
31	359971		1	Control cable holder		
32	500031		2	Screw		
33	903914		2	Screw		
34	904230		4	Washer		

A) One pair

DynapacParts.com
800-889-0661

DynapacParts.com
800-889-0661

359918 Steering column

15944

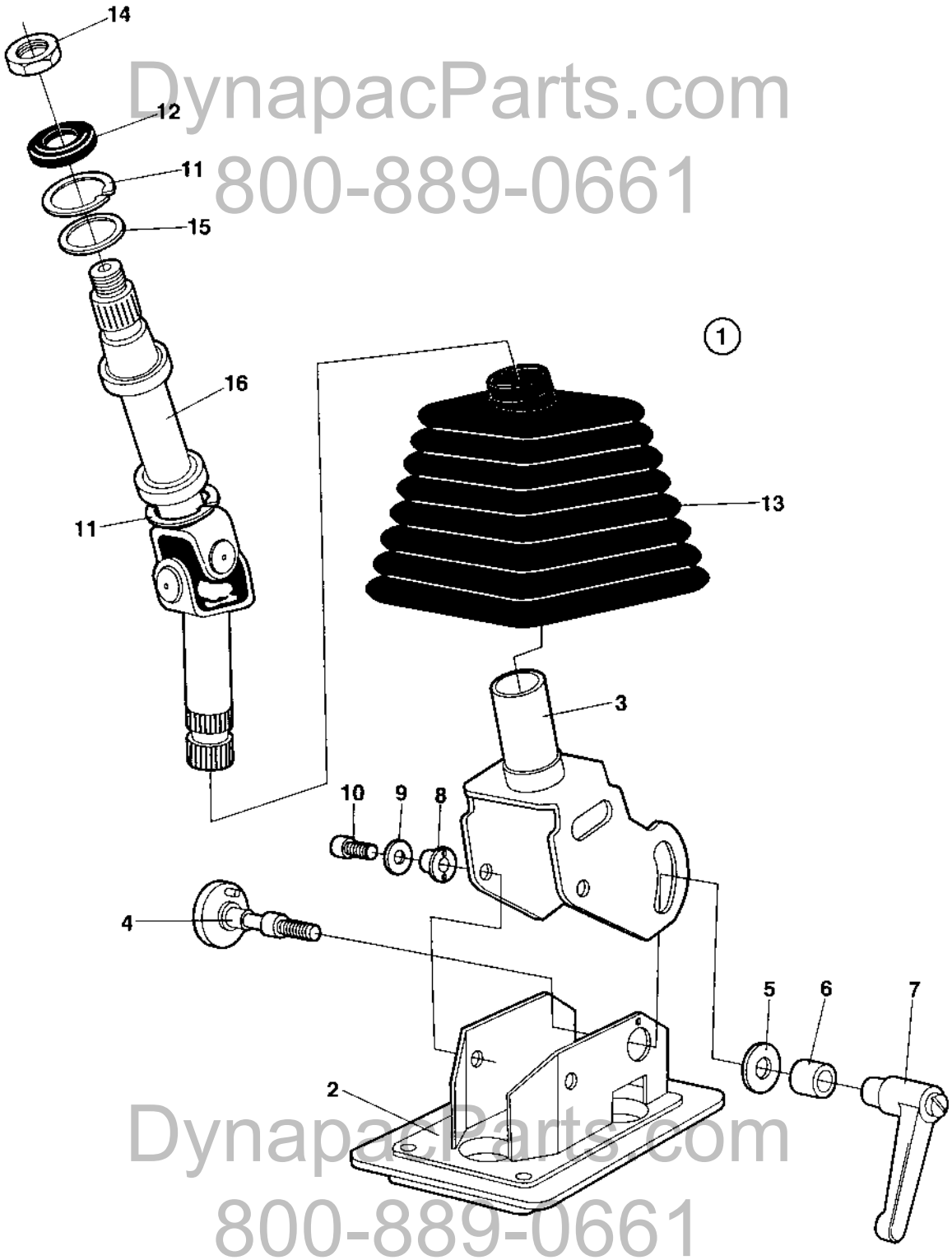

DynapacParts.com
800-889-0661
DynapacParts.com
800-889-0661

359918 Steering column

Ref. No.	Part No.	Rem.	Qty	Description	Code
1	359918		1	Steering column (Page 212)	C
2	935229	A	1	.Frame	
3	935230	B	1	.Frame	
4	935231		1	.Screw	
5	935232		1	.Washer	
6	935233		1	.Sleeve	
7	935234		1	.Lever	
8	935235		2	.Washer	
9	935236		2	.Washer	
10	935237		2	.Screw	
11	935238		2	.Retaining ring	
12	935239		1	.Seal	
13	935240		1	.Bellows	
14	935241		1	.Nut	
15	935242		1	.Washer	
16	935243		1	.Cardan shaft	

A) Lower
B) Upper

DynapacParts.com
800-889-0661

DynapacParts.com
800-889-0661

Steering system

17038-1

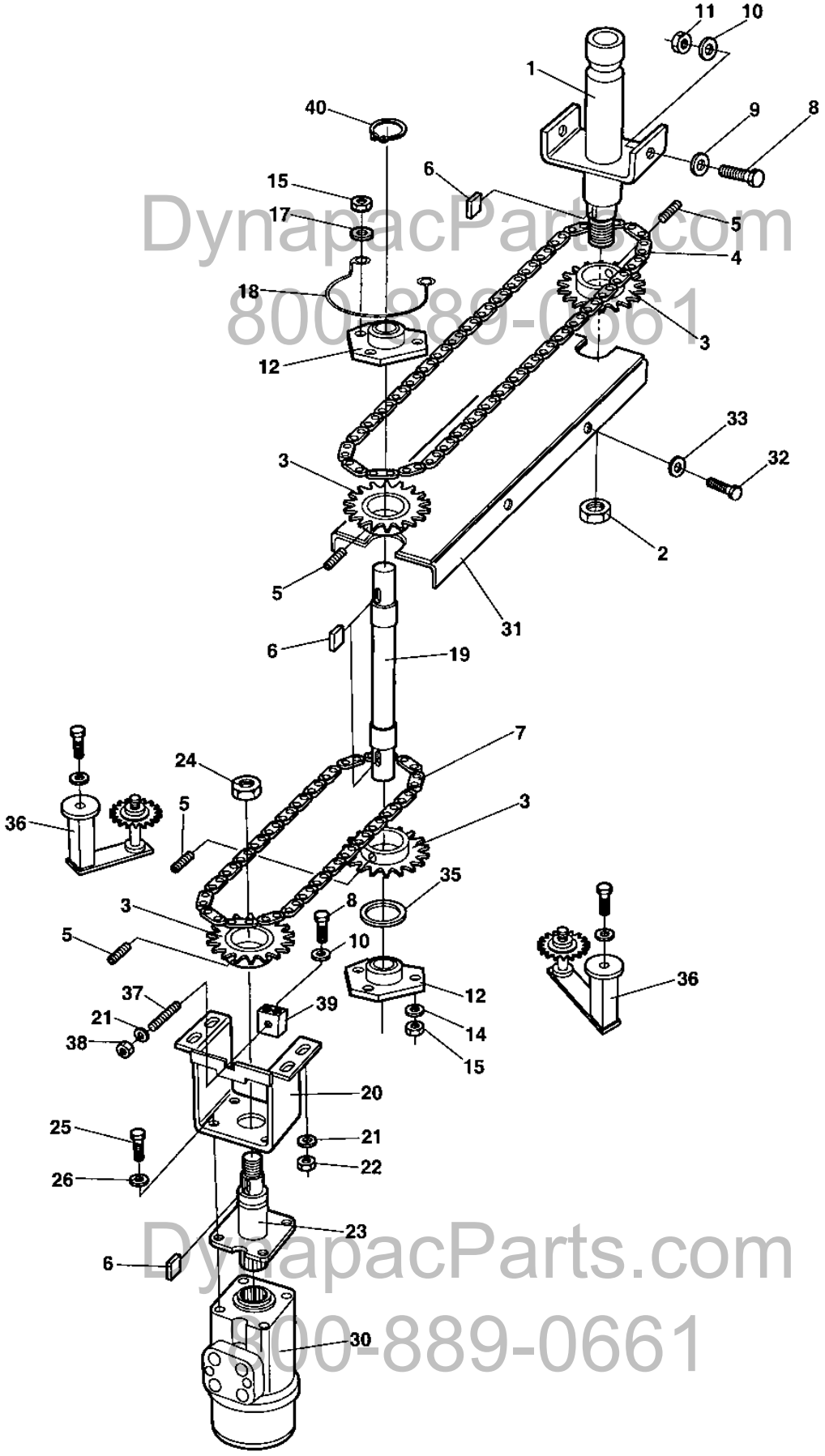

DynapacParts.com
800-889-0661

Steering system

Ref. No.	Part No.	Rem.	Qty	Description		Code
1	359919		1	Shaft		
2			1	.Nut		
3	359916		4	Chain wheel		D
4	359921		1	Chain		D
5	516051		4	Set screw		
6	350009		4	Flat key		D
7	372653	A	1	Chain		
	372654	B	1	Chain		
8	500021		3	Screw		
9	904734		2	Washer		
10	904229		3	Washer		
11	586003		2	Lock nut		
12	903917	C	2	Bearing outer		
	903918	D	2	Bearing inner		
14	904228		4	Washer		
15	586002		6	Lock nut		
17	603001		2	Washer		
18	372672		1	Chain guard		
19	374933	A	1	Shaft		
	374934	B	1	Shaft		
20	381567	E	1	Bracket		
21	904640		5	Washer		
22	586003		4	Lock nut		
23	370978		1	Linkage shaft		
24			1	.Nut		
25	502036		4	Screw	3/8"-16UNCx11/4"8.8	
26	904230		4	Washer		
30			1	Steering valve		
31	381403		1	Chain supporter		
32	500040		4	Screw		
33	904735		4	Washer		
35	904214		1	Washer		
36	904739		2	Chain tensioner		
37	904802		1	Threaded stud		
38	586003		1	Lock nut		
39	381571		1	Bracket		
40	150004		1	Retaining ring		

A) For cab
B) For platform
C) Outer
D) Inner
E) Steering valve

DynapacParts.com
800-889-0661

DynapacParts.com
800-889-0661

Turning Controls

17040

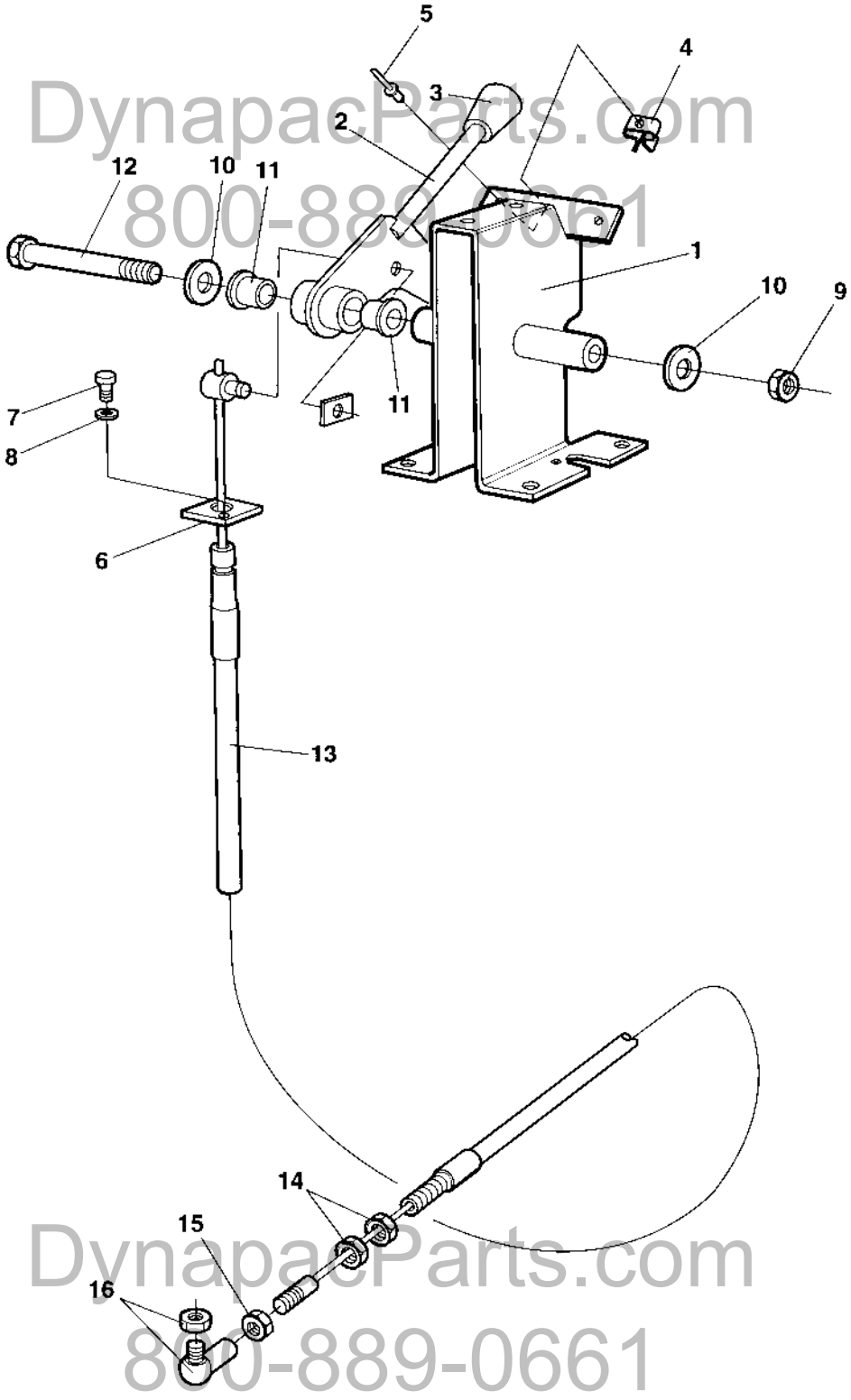

DynapacParts.com
800-889-0661
DynapacParts.com
800-889-0661

Turning Controls

Ref. No.	Part No.	Rem.	Qty	Description		Code
1	935771		1	Framing		
2	909745		1	Lever		
3	908190		1	Ball knob		
4	908189		1	Lever lock		
5	624016		1	Blind rivet		
6	908188		1	Cable holder		
7	533024		1	Screw		
8	615041		1	Washer	5,3x11	
9	586002		1	Lock nut		
10	928381		2	Washer	6,4x18x1,6	
11	908187		2	Plain bearing		
12	500169		1	Screw		
13	935774	A	1	Cable, cpl		D
14	927233		2	.Nut		
15	570004		1	.Nut	M6	
16	416034		1	Ball joint		D

A) Turning

DynapacParts.com
800-889-0661

DynapacParts.com
800-889-0661

Turning Carrier

17041

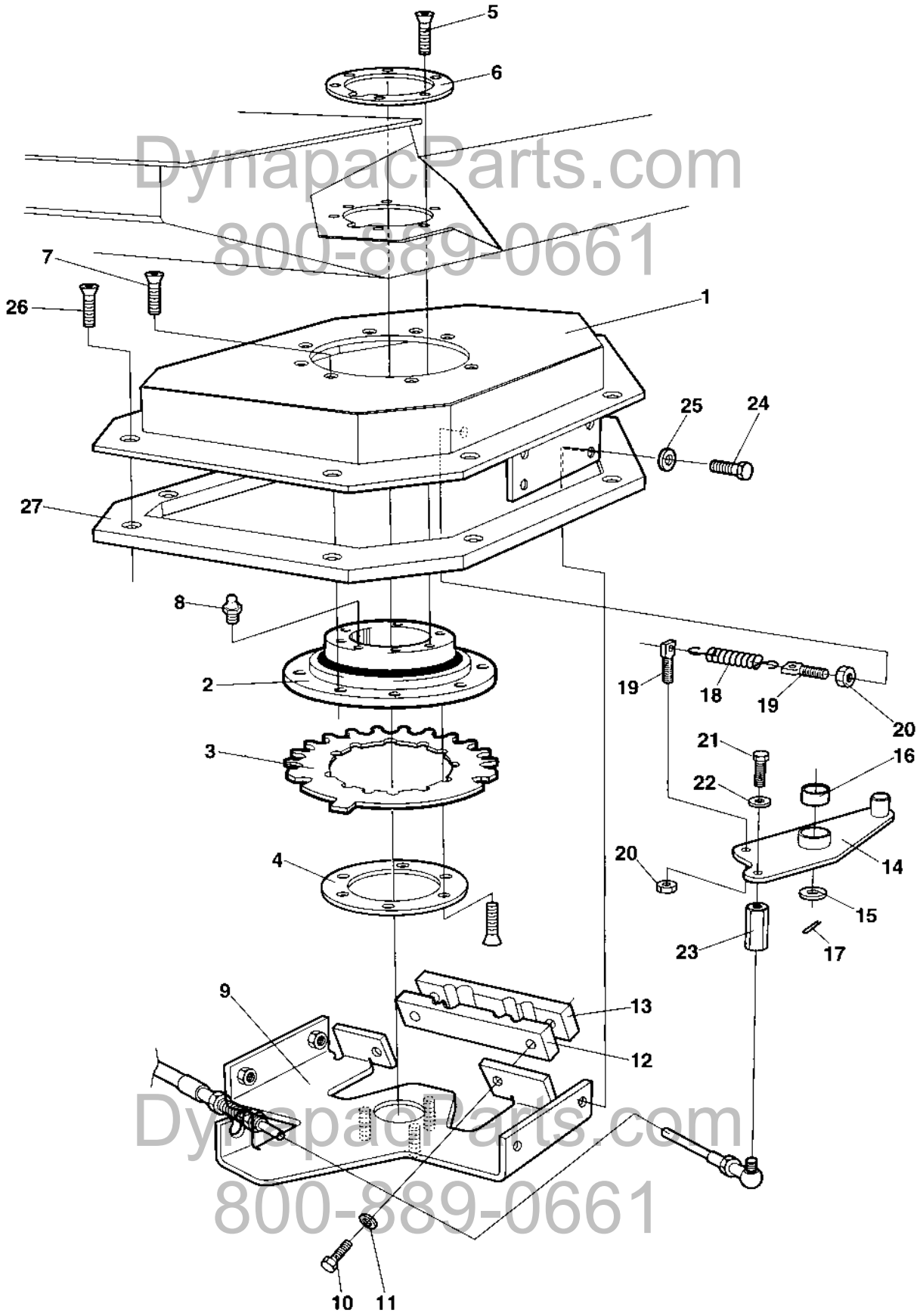

DynapacParts.com
800-889-0661
DynapacParts.com
800-889-0661

Turning Carrier

Ref. No.	Part No.	Rem.	Qty	Description		Code
1	371374		1	Bearing housing		
2	359125		1	Ball bearing		
3	370955		1	Locking disc		
4	372966	A	1	Lock ring		
5	902520		12	Screw		
6	372965	B	1	Lock ring		
7	513003		8	Screw		
8	926214		1	Grease fitting		D
9	371418		1	Bracket		
10	508056		2	Screw	M8x40	
11	904229		2	Washer		
12	372961		1	Clamp		
13	372671		1	Clamp		
14	374417	C	1	Coupling link		
15	904231		1	Washer		
16	359820		1	Bushing		
17	630035		1	Split pin		D
18	359043		1	Spring		D
19	359818		2	Spring collar		
20	573008		2	Nut	M8	
21	500013		1	Screw		
22	904228		1	Washer		
23	373547	D	1	Spacer		
	372459	E	1	Spacer		
24	500021		4	Screw		
25	904556		4	Washer		
26	513013	D	8	Screw		
	903644	E	8	Screw		
27	372083	F	1	Spacer		

A) Lower
B) Upper
C) For turning
D) Platform
E) Cab
F) Only for cab

DynapacParts.com
800-889-0661

DynapacParts.com
800-889-0661

Forward and reverse control

17465

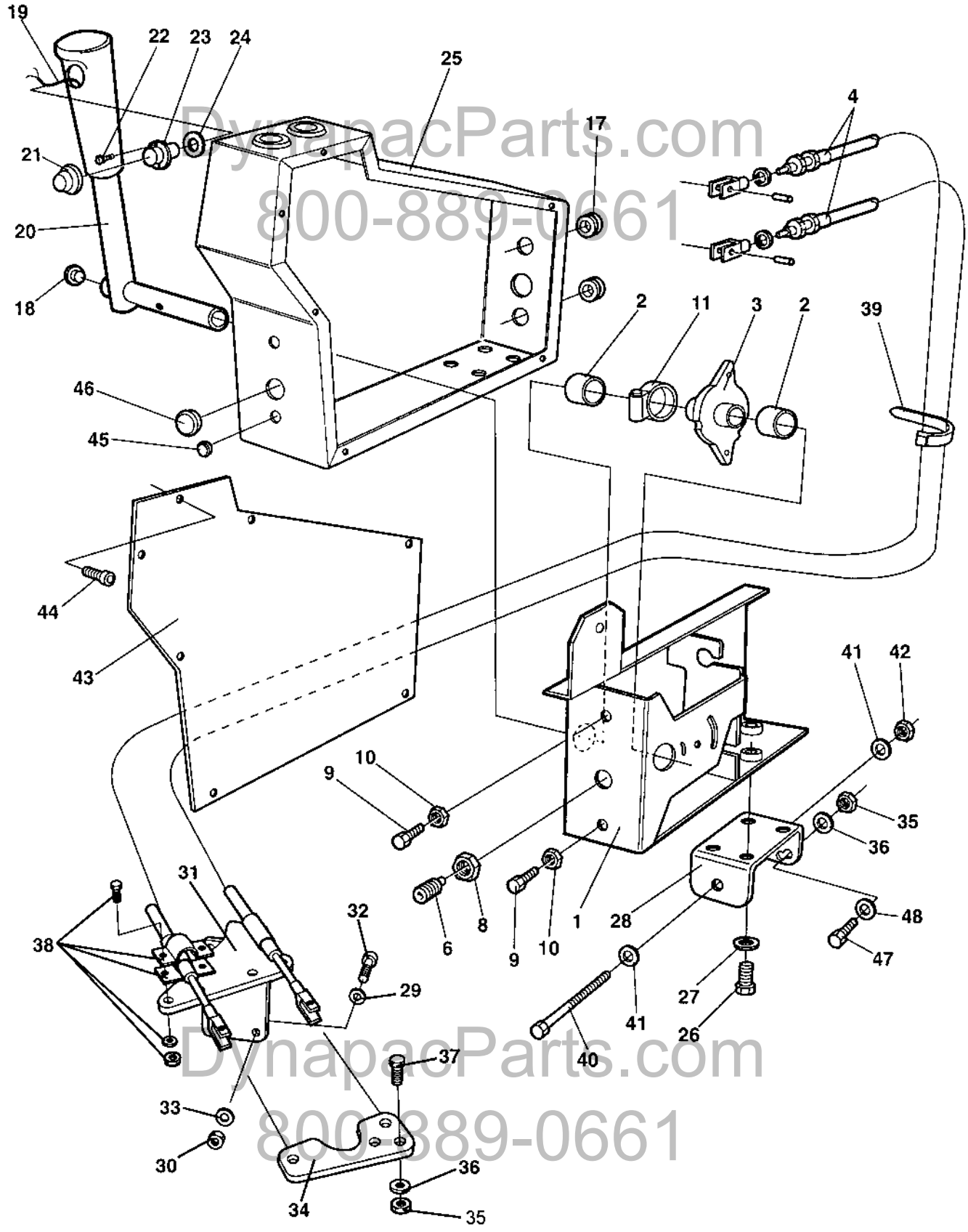

DynapacParts.com
800-889-0661
DynapacParts.com
800-889-0661

Forward and reverse control

Ref. No.	Part No.	Rem.	Qty	Description		Code
1	909747		1	Framing		
2	908200		2	Bearing		
3	909748		1	Cam disc		
4	935225	A	2	Cable		
	573004		4	.Nut		
	908193		2	.Fork		
6	922325		1	Spring ball plunger		D
8	573004		1	Nut		
9	533038		2	Screw		
10	570004		2	Nut	M6	
11	313147		1	Hose clip		
17	909122		2	Grommet		
18	902203		1	Plug		
19	372782		1	Cable harness		
20	359575		1	Control lever		
21	348481		1	Cover		D
22	371009		2	Screw		
23	928497		1	Push button		D
24	395325		1	Washer		
25	372322		1	Control cover		
26	500053		2	Screw		
27	904229		2	Washer		
28	381676	B	1	Bracket		
29	904229		3	Washer		
30	904556		3	Washer		
31	382884		1	Control bracket		
32	947680		3	Screw	M8-1,25x25 10.9	
33	904229		3	Washer		
34	372568		1	Control bracket		
35	586003		3	Lock nut		
36	904229		3	Washer		
37	500021		2	Screw		
38	465013		2	Clamp		D
39	313041		N	Cable ties	L=186 mm	
40	500267		1	Screw	M12x120 8,8 FZB	
41	904231		2	Washer		
42	586019		1	Lock nut		
43	372321		1	Cover		
44	903658		7	Screw	M5x10	
45	900986		2	Plug		
46	287373		1	Plug		
47	508092		1	Screw		
48	904229	C	1	Washer		

A) Forward/reverse
B) Regarding "double hole". Upper hole for standard seat. Lower hole for accessorie seat.
C) Only in use on standard seat

DynapacParts.com
800-889-0661

DynapacParts.com
800-889-0661

Speed limiter Option

17657

DynapacParts.com
800-889-0661

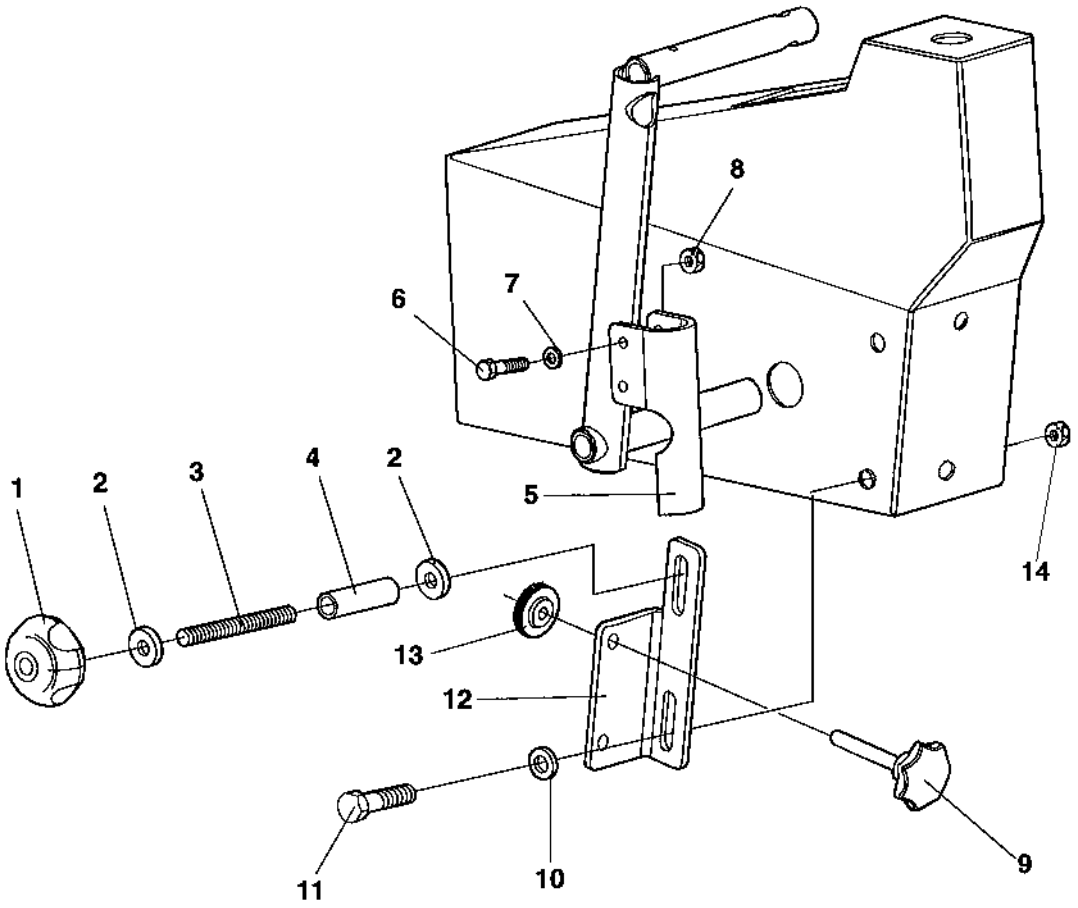

DynapacParts.com
800-889-0661

Speed limiter Option

Ref. No.	Part No.	Rem.	Qty	Description		Code
1	904290		1	Hand knob		
2	904640		2	Washer		
3	791313		1	Threaded stud	M8x85	
4	386003		1	Spacer sleeve		
5	386002		1	Lever holder		
6	500186		2	Screw		
7	904228		4	Washer		
8	586002		2	Lock nut		
9	791314		1	Handle knob		
10	904556		1	Washer		
11	500053		1	Screw		
12	385994		1	Bracket		
13	791312		2	Letter nut		
14	586003		2	Lock nut		

DynapacParts.com
800-889-0661

DynapacParts.com
800-889-0661

Engine control

17755

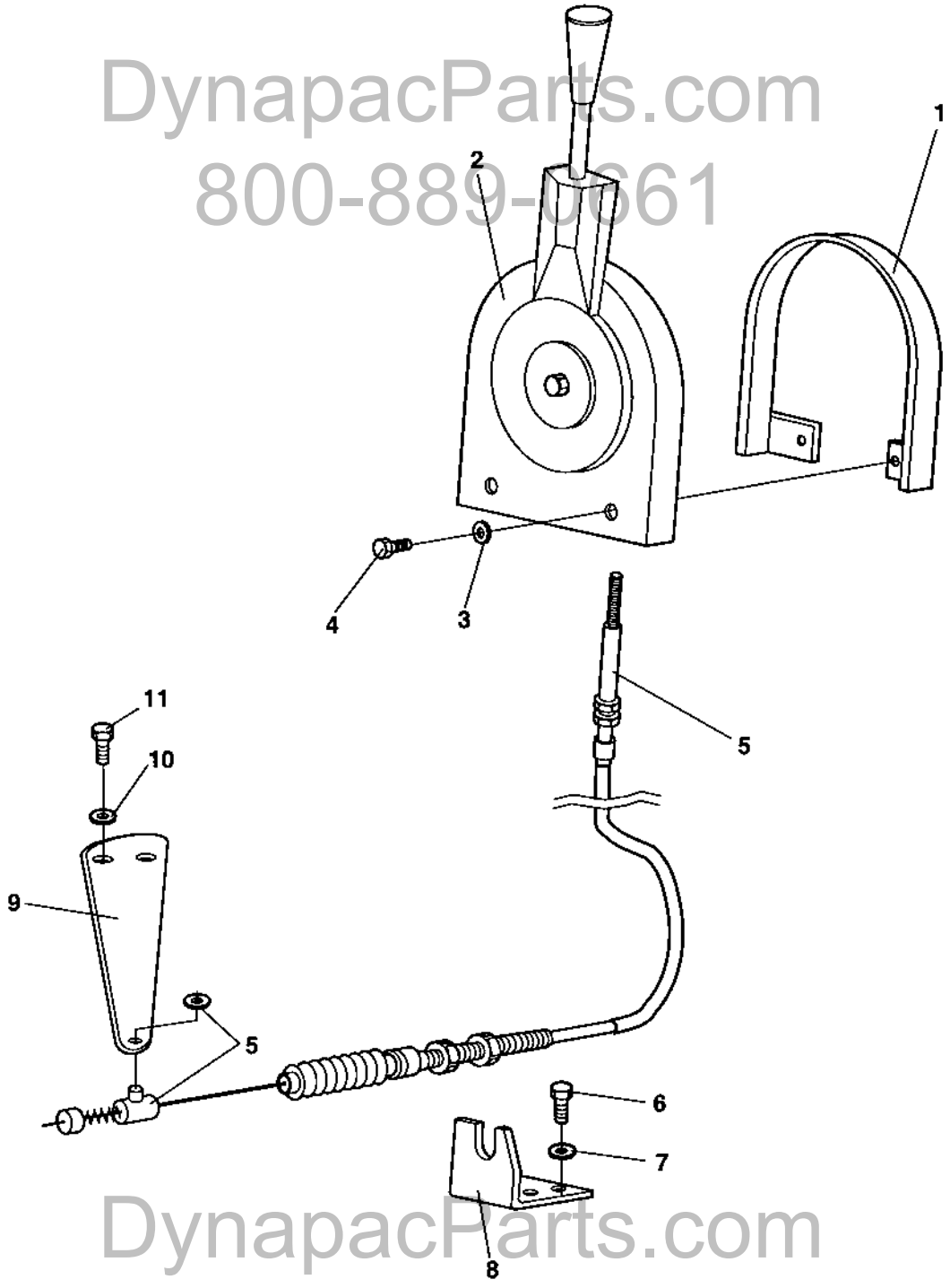

DynapacParts.com
800-889-0661
DynapacParts.com
800-889-0661

Engine control

Ref. No.	Part No.	Rem.	Qty	Description		Code
1	382225		1	Yoke		
2	382213		1	Control		
3	904228		4	Washer		
4	500015		2	Screw	M6-1x30 8,8	
5	388163		1	Cable		D
6	500028		2	Screw		
7	904230		2	Washer		
8	388015		1	Control bracket		
9	387998		1	Control lever		D
10	904228		2	Washer		
11	500012		2	Screw		

DynapacParts.com
800-889-0661

DynapacParts.com
800-889-0661

Engine control

17987

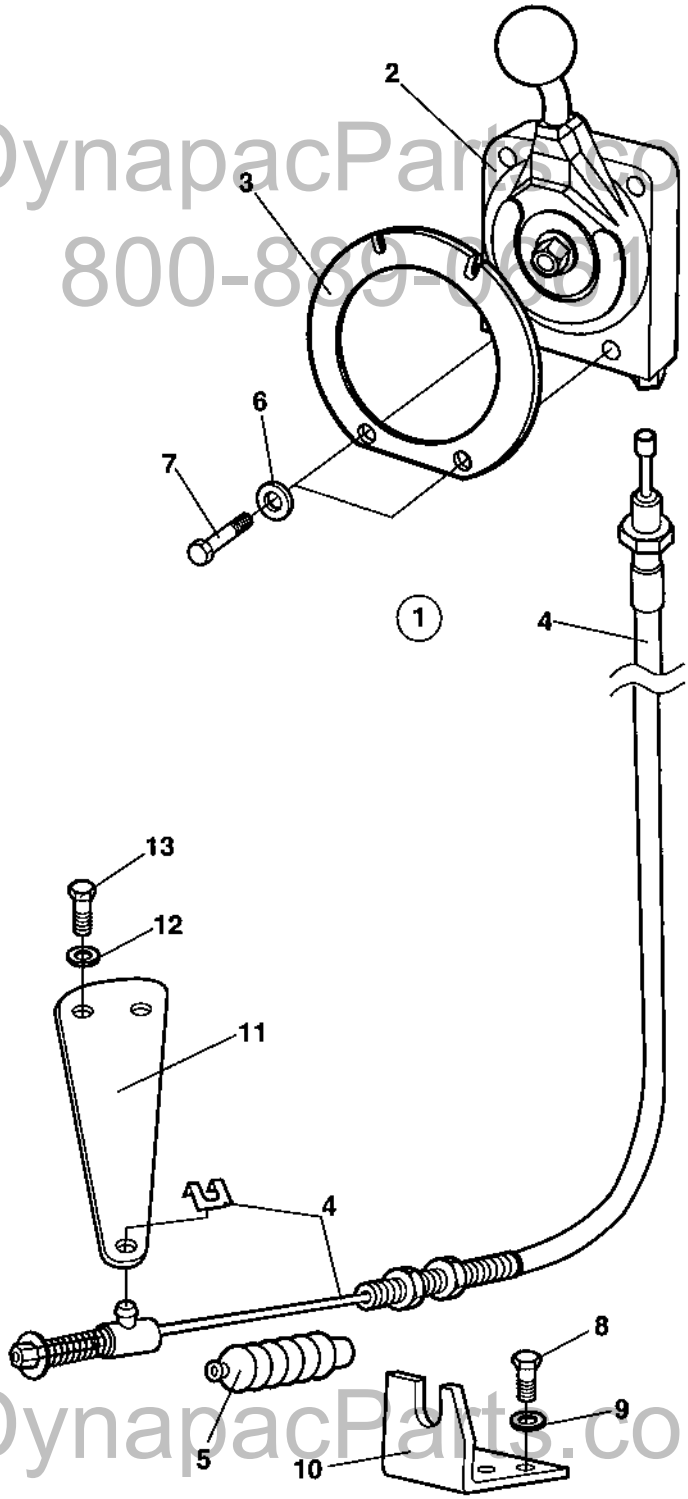

DynapacParts.com
800-889-0661
DynapacParts.com
800-889-0661

Engine control

Ref. No.	Part No.	Rem.	Qty	Description		Code
1	389174		1	Throttle control, cpl		
2	389175		1	.Control		
3	389177		1	.Snap plate		
4	389183	A	1	.Throttle cable		D
5	382349		1	.Bellows		
6	904228		2	Washer		
7	500015		2	Screw	M6-1x30 8,8	
8	500028		2	Screw		
9	904230		2	Washer		
10	388015		1	Control bracket		
11	387998		1	Control lever		D
12	904228		2	Washer		
13	500012		2	Screw		

A) L=3100MM

DynapacParts.com
800-889-0661

DynapacParts.com
800-889-0661

Rops and fops

17738

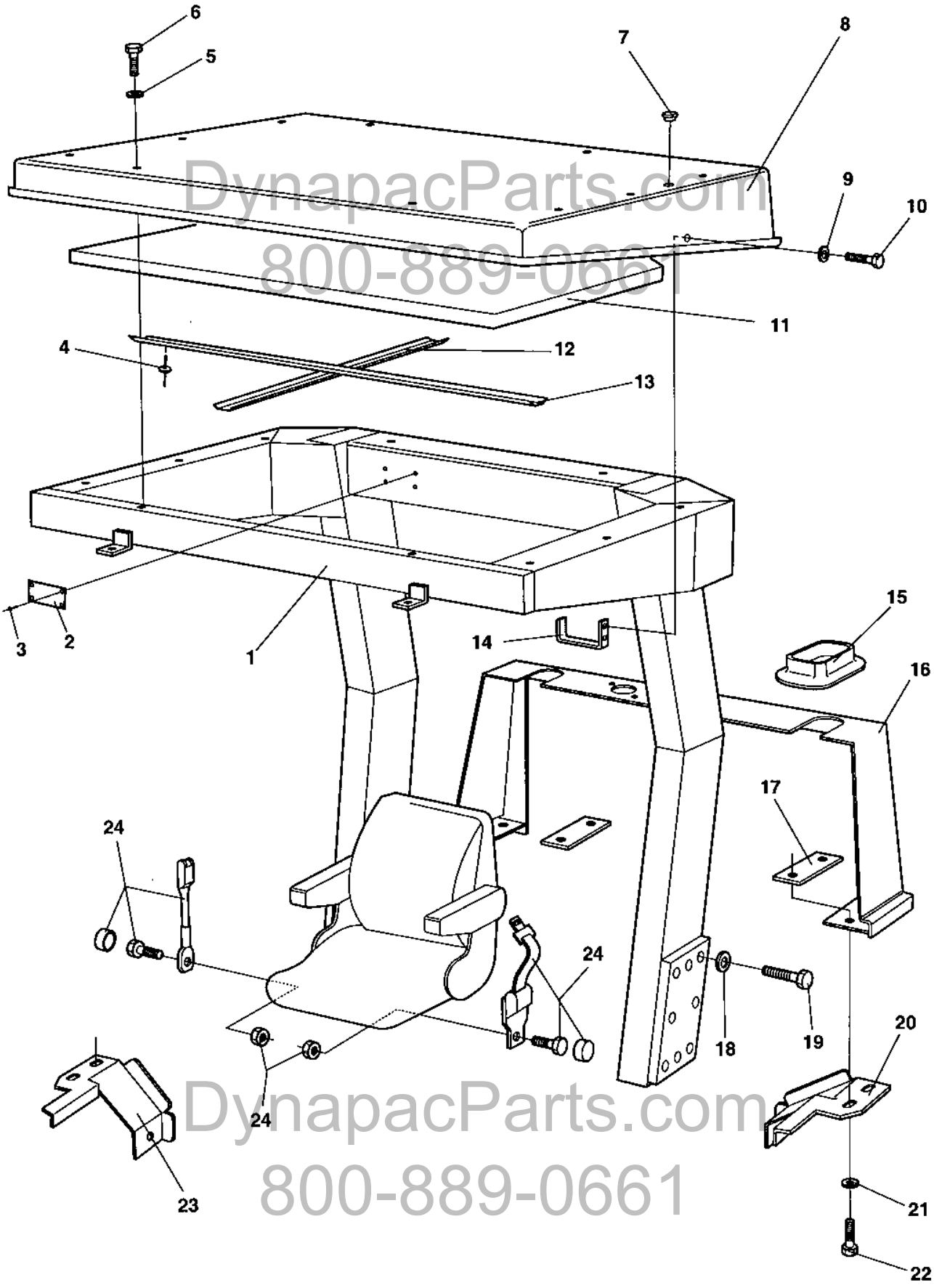

DynapacParts.com
800-889-0661
DynapacParts.com
800-889-0661

Rops and fops

Ref. No.	Part No.	Rem.	Qty	Description	Code
1	372743		1	Rops	
2	370803		1	.Sign, rops	
3	624016		4	.Blind rivet	
4	904619		12	Blind rivet	
5	904734		23	Washer	
6	500239		19	Screw	M8-1.25x50
7	904180		2	Plug	
8	372745		1	Fops roof	
9	904734		4	Washer	
10	500100		4	Screw	
11	372678		1	Absorbent	
12	376489		2	Absorbent holder	
13	376488		1	Absorbent holder	
14	383225		2	Hook	
15	372489		2	Rubber seal	
16	387175		1	Protecting cover	
17			2	Holder plate	
18	904234		12	Washer	
19	904562		12	Screw	
20	373854		1	Holder plate	
21	904640		4	Washer	
22	500021		4	Screw	
23	373855		1	Holder plate	
24	370766		1	Seat belt	
	383200	A	1	Seat belt	3"

A) Option 3"

DynapacParts.com
800-889-0661

DynapacParts.com
800-889-0661

DynapacParts.com
800-889-0661

DynapacParts.com
800-889-0661

Cab 383030

Ref. No.	Part No.	Rem.	Qty	Description	Code
300				Cab (Page 232)	Interior
310				Cab (Page 234)	Inside panels
320				Cab (Page 236)	Screens
330				Cab (Page 240)	Door
340				Cab (Page 242)	Wipers front and rear
350				Cab (Page 244)	Mirror, Sun curtain
360				Cab (Page 246)	Electric
370				Cab (Page 248)	Heater system
380	385434			Cab heater, cpl (Page 250)	
390				Cab (Page 252)	Cable harness

DynapacParts.com
800-889-0661

DynapacParts.com
800-889-0661

Cab Interior

17678

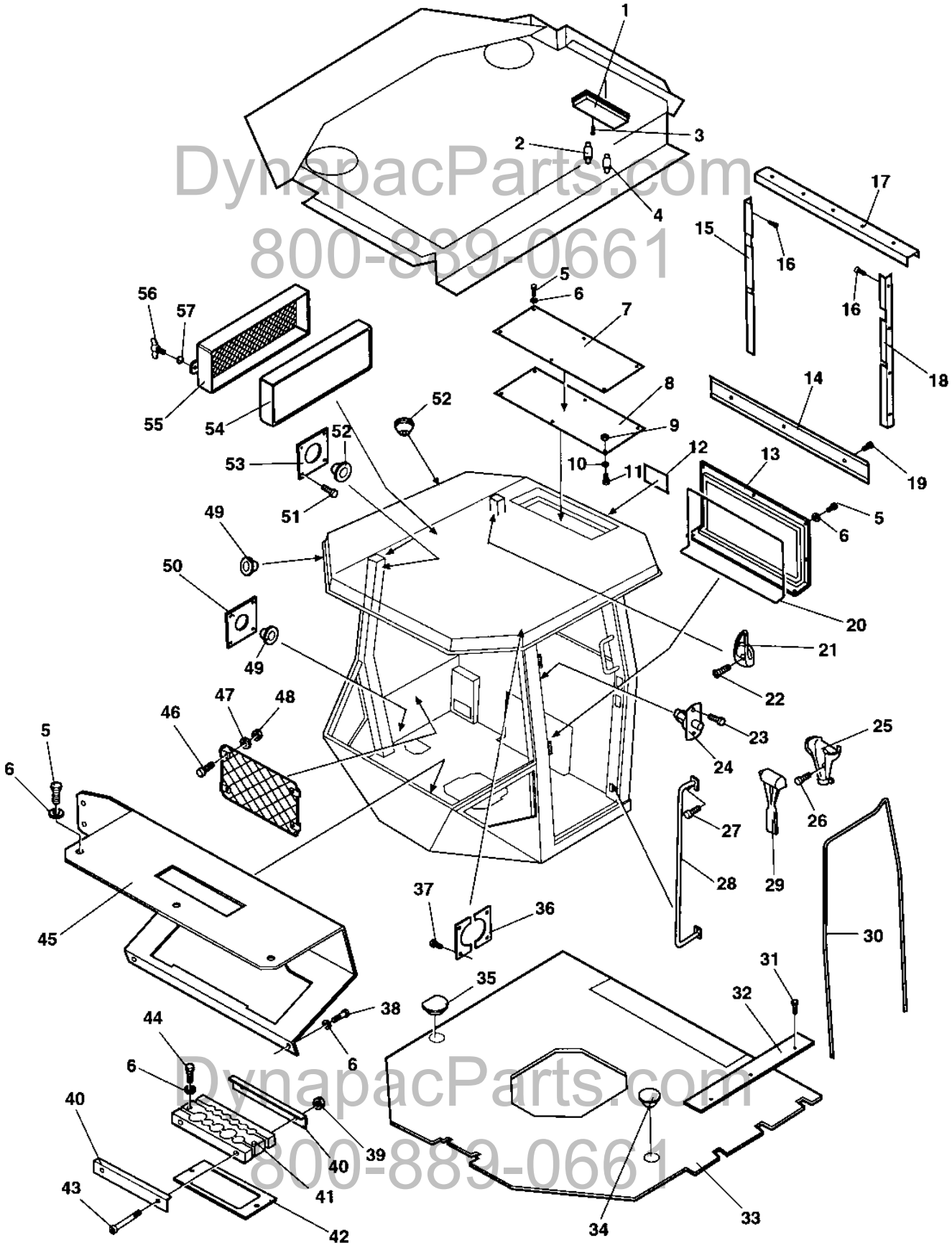

DynapacParts.com
800-889-0661

Cab Interior

Ref. No.	Part No.	Rem.	Qty	Description		Code
1	908515		1	Inner light		
2	985013		1	Bulb	12V,5W	B
3	541535		2	Screw		
4	985051		1	Bulb	12V,10W	B
5	500053		22	Screw		
6	904229		31	Washer		
7	938678		1	Cover		
8	938679		1	Cover		
9	586003		18	Lock nut		
10	904229		31	Washer		
11	500053		22	Screw		
12	935589		1	Decal		
13	935590		1	Cover plate		
14	938675		1	List		
15	938672		1	List		
16	938671		4	Screw		
17	938674		1	List		
18	938673		1	List		
19	938671		3	Screw		
20	908587	A	2	Edge trim		
21	908505		1	Hook		
22	938676		2	Screw		
23	925784		2	Screw		
24	908500		1	Door switch		
25	908506		1	Holder		
26	938670		2	Screw		
27	938677		2	Screw		
28	935591		1	Handle		
29	908507		1	Emergency hammer		
30	908499	B	1	Rubber list		
31	535007		9	Screw	M5x16	
32	935578		1	Edge trim		
33	935577		1	Floor material		
34	908512		1	Cover		
35	935579		1	Cover		
36	935580		2	Bracket		
37	500004		16	Screw	M5 0,8x12 8,8	
38	500018		6	Screw	M8-1,25x12 8,8	
39	586003		10	Lock nut		
40	935583		2	Holder plate		
41	935582		1	Grommet kit		
42	935581		1	Metal gasket		
43	500115		2	Screw	M8-1,25x90 8.8	
44	500047		2	Screw	M8-1,25x35 8,8	
45	935584		1	Panel plate		
46	535007		4	Screw	M5x16	
47	904281		4	Washer		
48	586001		4	Lock nut		
49	909510		9	Grommet		
50	935585		1	Bracket		
51	500004		16	Screw	M5 0,8x12 8,8	
52	908496		5	Grommet		
53	935586		2	Bracket		
54	908502		1	Filter		A
55	908501		1	Filter frame		
56	908504		2	Handle		
57	908503		2	O-ring		

A) L=2 M
B) L=5,0 M

DynapacParts.com
800-889-0661
DynapacParts.com
800-889-0661

Cab Inside panels

17679

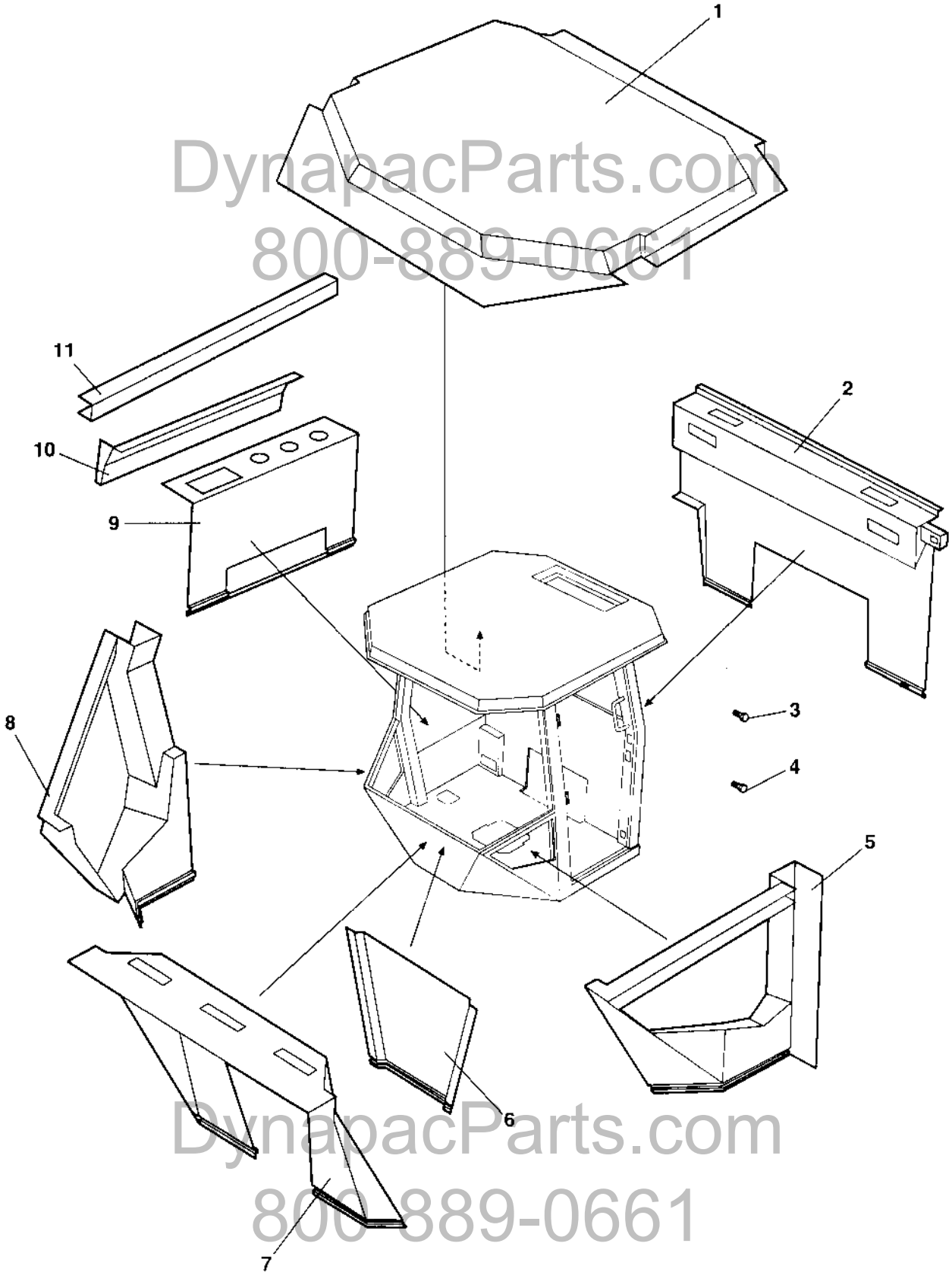

DynapacParts.com
800-889-0661
DynapacParts.com
800-889-0661

Cab Inside panels

Ref. No.	Part No.	Rem.	Qty	Description	Code
1	938681		1	Panel	
2	938685		1	Panel	
3	938677		50	Screw	
4	937932			Screw	
5	935600		1	Panel	
6	935599		1	Panel	
7	935598		1	Panel	
8	938684		1	Panel	
9	938683		1	Panel	
10	938682		1	Panel	
11	935594		1	Panel	

DynapacParts.com
800-889-0661

DynapacParts.com
800-889-0661

Cab Screens

17680

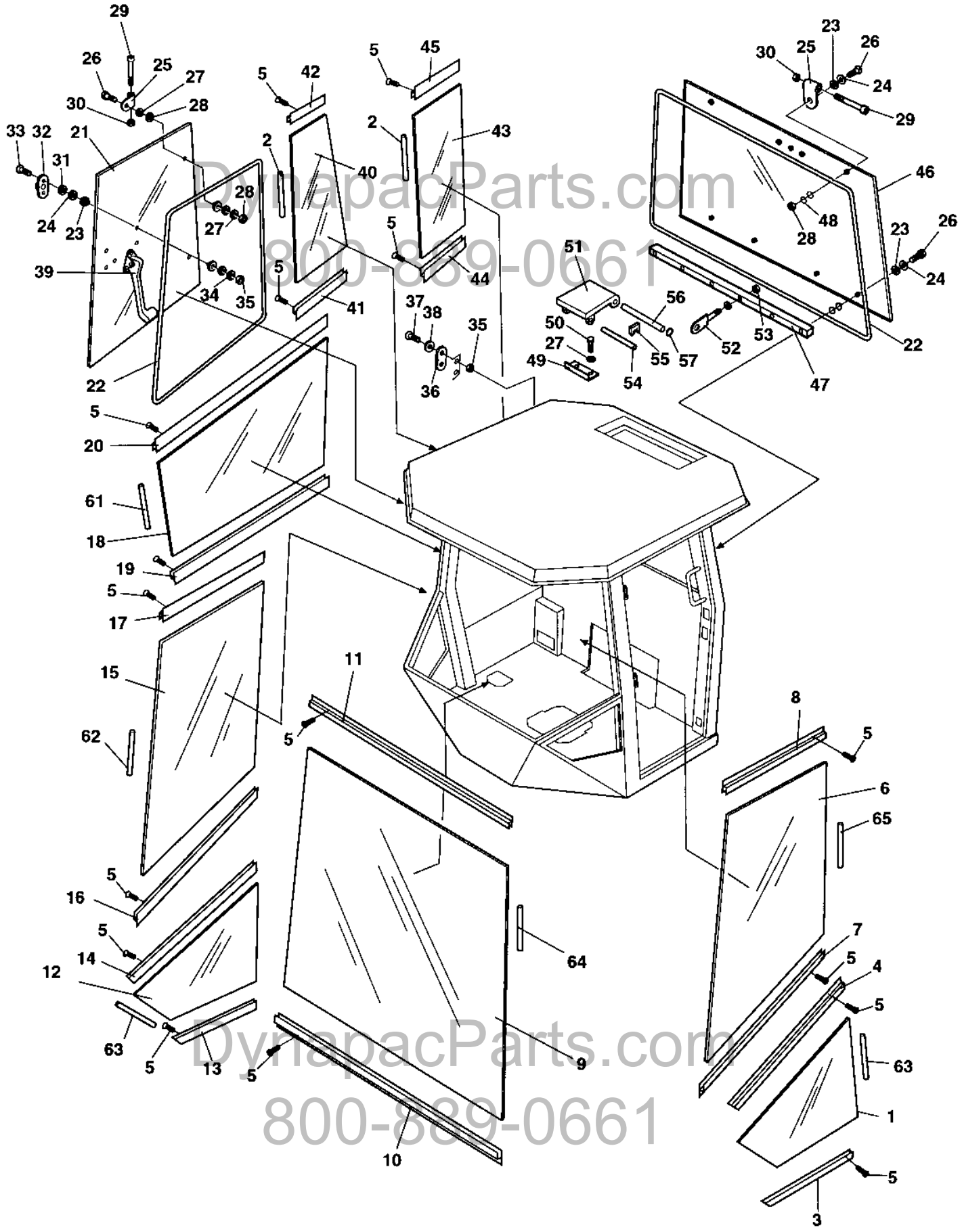

DynapacParts.com
800-889-0661
DynapacParts.com
800-889-0661

Cab Screens

Ref. No.	Part No.	Rem.	Qty	Description	Code
1	937380		1	Screen	
2	908545	A	2	Seal list	
3	935278		1	List	
4	935279		1	List	
5	937932		80	Screw	
6	937381		1	Screen, left	
8	935281		1	List	
9	937382		1	Screen	
10	935282		1	List	
11	935283		1	List	
12	937383		1	Screen	
13	935284		1	List	
14	935285		1	List	
15	937384		1	Screen	
16	935286		1	List	
17	935287		1	List	
18	937385		1	Screen	
19	935288		1	List	
20	935289		1	List	
21	938290		1	Screen	
22	908499	B	1	Rubber list	
23	935271		20	Washer, Flexible rubber	
24	935272		20	Washer, Black	
25	9335273		4	Hinge	
26	935274		8	Screw	
27	936277		4	Washer	
28	586003		18	Lock nut	
29	936934		4	Screw	M10x100
30	936935		4	Nut	M10
31	935275		2	Rubber washer	
32	935276		2	Bracket	
33	936600		2	Screw	
34	936601		2	Washer	
35	936602		4	Nut	M5
36	935277		2	Lock pin	
37	535007		9	Screw	M5x16
38	904281		6	Washer	
39	935290		1	Window lock, right	
40	938291		1	Screen	
41	935291		1	List	
42	938658		1	List	
43	938292		1	Screen	
44	935293		1	List	
45	938659		1	List	
46	937389		1	Screen	
47	935295		1	Screen holder	
48	935296		2	Washer	
49	935297		1	Bracket	
50	500019		7	Screw	
51	935298		2	Bracket	
52	935299		2	Bolt	
53	570004		4	Nut	M6
54	935300		1	Shaft	

A) L=1,4 m
B) L=2,7 m

DynapacParts.com
800-889-0661
DynapacParts.com
800-889-0661

Cab Screens

17680

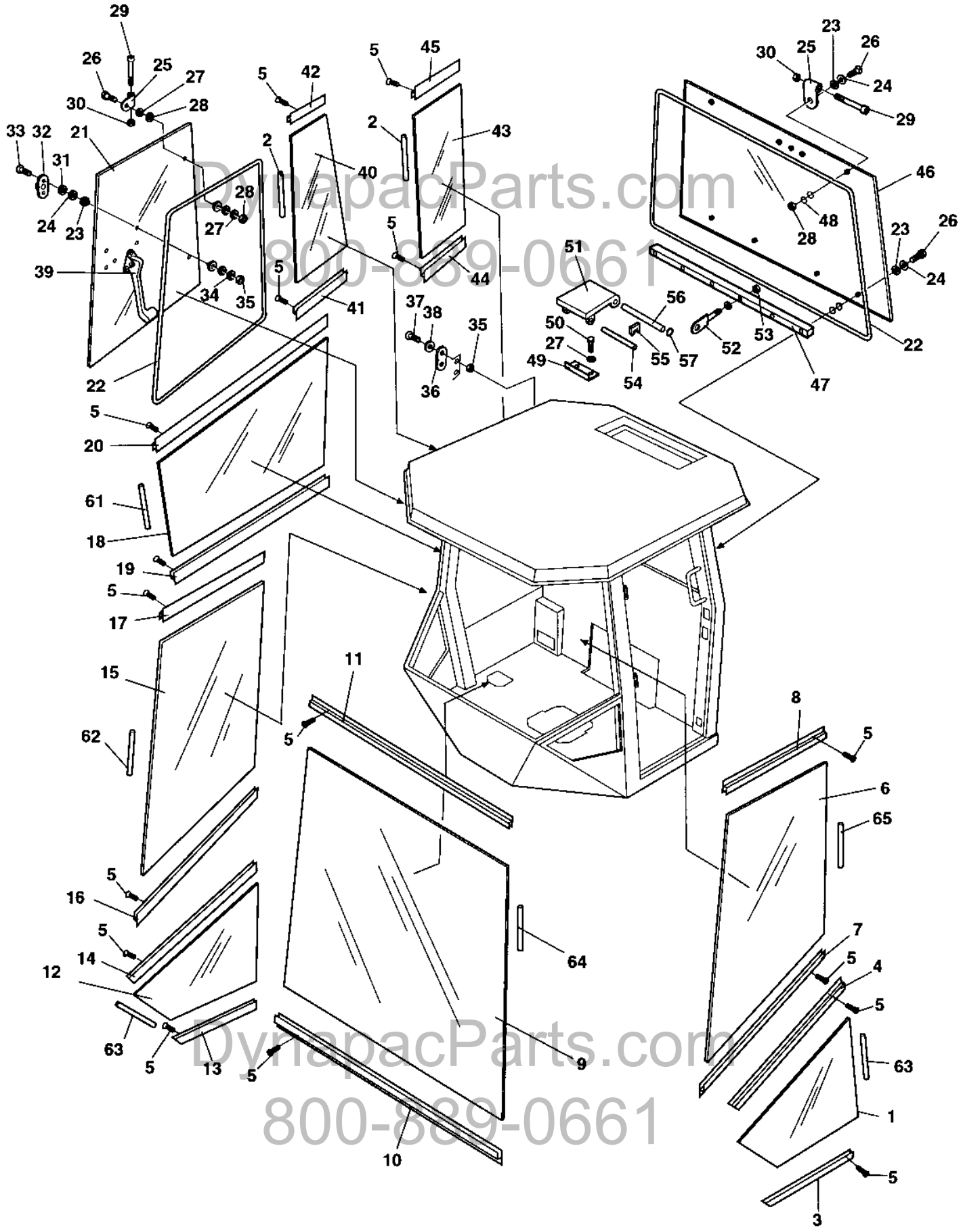

DynapacParts.com
800-889-0661
DynapacParts.com
800-889-0661

Cab Screens

Ref. No.	Part No.	Rem.	Qty	Description	Code
55	935301		2	Lock	
56	935302		1	Rod	
57	935303		1	Ring	
61	908545	C	1	Seal list	
62	908545	D	1	Seal list	
63	908545	E	2	Seal list	
64	908545	F	1	Seal list	
65	908545	G	1	Seal list	

C) L=1,1 M
D) L=1,9 M
E) L=0,8 M
F) L=2,1 M
G) L=0,9 M

DynapacParts.com
800-889-0661

DynapacParts.com
800-889-0661

Cab Door

17681

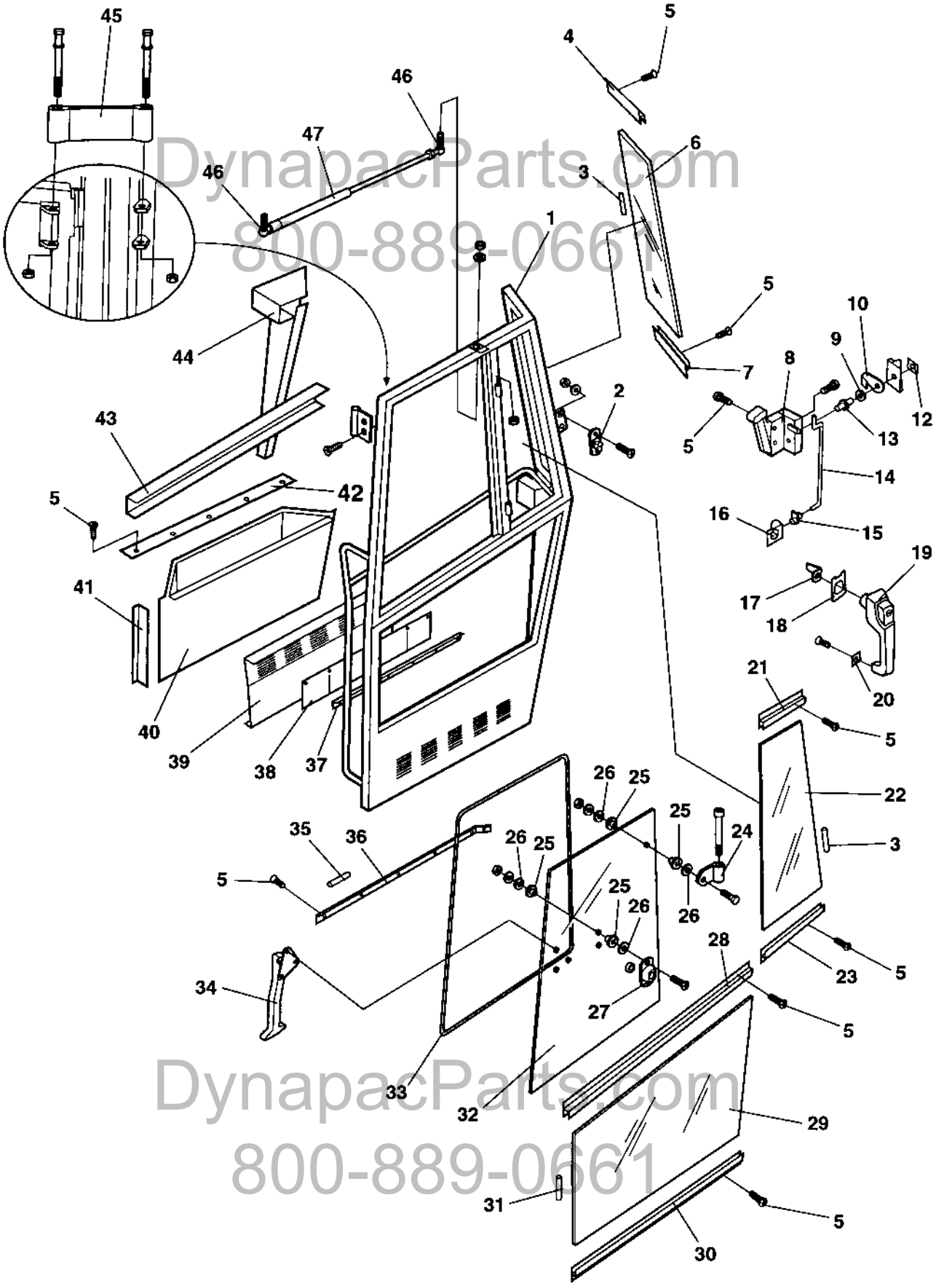

DynapacParts.com
800-889-0661
DynapacParts.com
800-889-0661

Cab Door

Ref. No.	Part No.	Rem.	Qty	Description	Code
	938224		1	Door, cpl	
1	938016		1	.Door frame	
2	935277		2	.Lock pin	
3	908545	A	2	.Seal list	
4	935268		1	.List	
5	937932		80	.Screw	
6	937391		1	.Screen	
7	935267		1	.List	
8	938017		1	.Lock	
9	908581		1	.Washer	
10	908582		1	.Cover	
12	908583		1	.Bracket	
13	908580		1	.Lock pin	
14	935250		1	.Rod	
15	935249		1	.Retainer	
16	935248		1	.Turning mechanism	
17	935247		1	.Leader	
18	935246		1	.Seal	
19	935244		1	.Door handle with key	
20	935245		1	.Seal	
21	935270		1	.List	
22	937392		1	.Screen	
23	935269		1	.List	
24	935273		2	.Hinge	
25	935271		4	.Washer, Flexible rubber	
26	935272		4	.Washer, Black	
27	935276		1	.Bracket	
28	935266		1	.List	
29	937390		1	.Screen	
30	935265		1	.List	
31	908545	B	1	.Seal list	
32	937393		1	.Screen	
33	908499		1	.Rubber list	
34	935253		1	.Lock	
35	908987	C	1	.Seal	
36	935255		1	.List	
37	935256		1	.List	
38	935257		1	.Ventilating grill	
39	935258		1	.Panel plate	
40	935260		1	.Panel	
41	935261		1	.Panel	
42	935262		1	.Support list	
43	935263		1	.Panel	
44	938043		1	.Panel	
45	938024		1	.Door stop	
46	937121		2	.Ball joint	
47	938018		1	.Gas spring	

A) L=1,4 M
B) L=1,1 M
C) L=0,75 M

DynapacParts.com
800-889-0661

DynapacParts.com
800-889-0661

Cab Wipers front and rear

17682

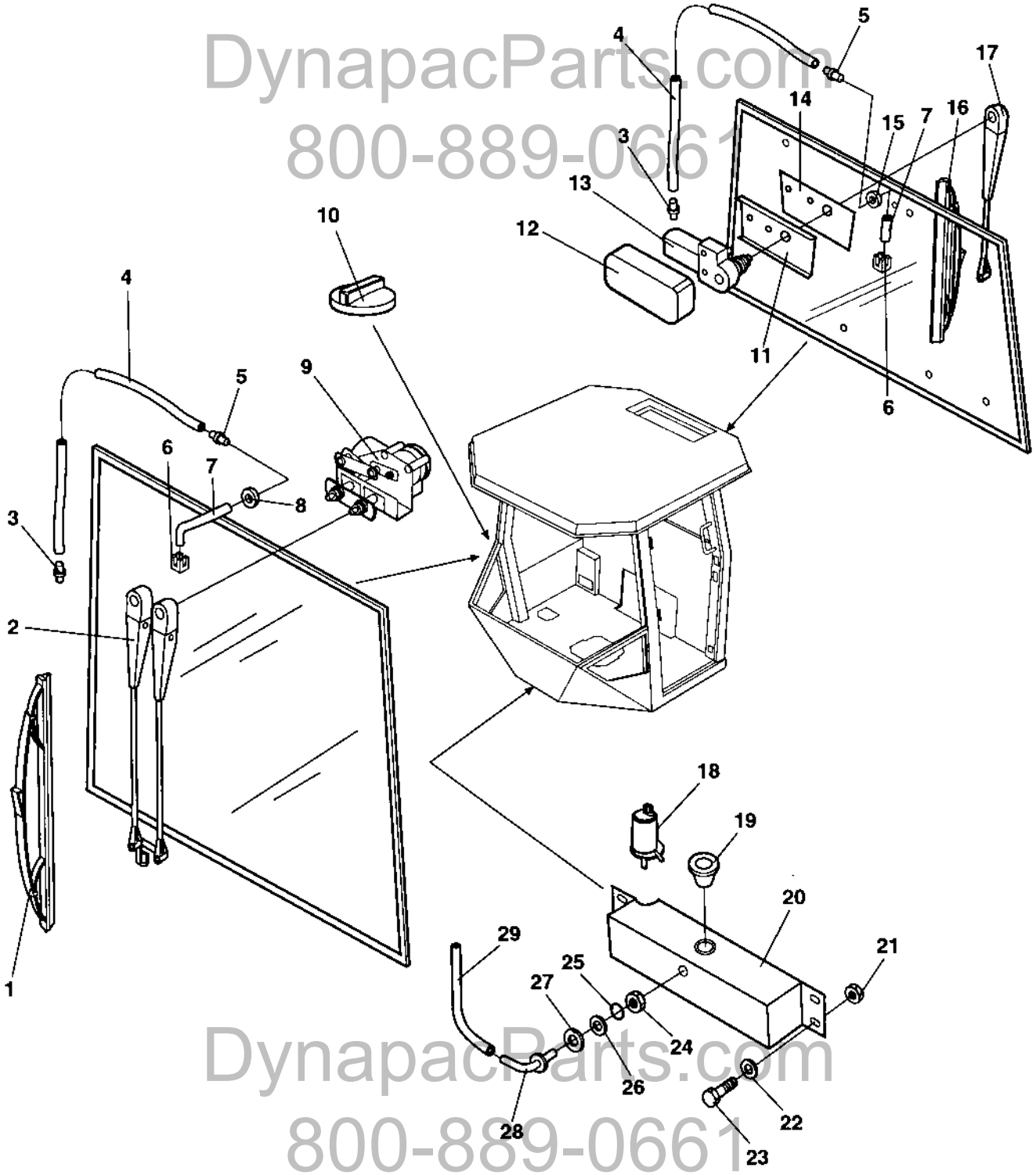

DynapacParts.com
800-889-0661
DynapacParts.com
800-889-0661

Cab Wipers front and rear

Ref. No.	Part No.	Rem.	Qty	Description		Code
1	905306		1	Wiper blade		
2	905305		1	Wiper arm		
3	908564		2	Check valve		
4	908563	A	2	Plastic hose		
5	938136		2	Elbow adapter	90	
6	908559		2	Nozzle		
7	908560	B	2	Rubber hose		
8	909510		1	Grommet		
9	905304		1	Wiper motor		
10	904114		1	Fuel cap		D
11	905309		1	Holder plate		
12	905308		1	Protecting cover		
13	905307		1	Wiper motor		
14	905310		1	Shim		
15	908497		1	Grommet		
16	905312		1	Wiper blade		
17	905311		1	Wiper arm		
18	935335		1	Pump		
19	938660		1	Grommet		
20	935334		1	Water reservoir		
21	586002		4	Lock nut		
22	904228		4	Washer		
23	500075		4	Screw	M6-1,0x25 8.8	
24	938661		1	Nut		
25	938662		1	O-ring		
26	938664		1	Washer		
27	938663		1	Washer		
28	938665		1	Adapter		
29	938666		1	Hose		

A) L=5,0 M
B) L=1.0 M

DynapacParts.com
800-889-0661

DynapacParts.com
800-889-0661

Cab Mirror, Sun curtain

17683

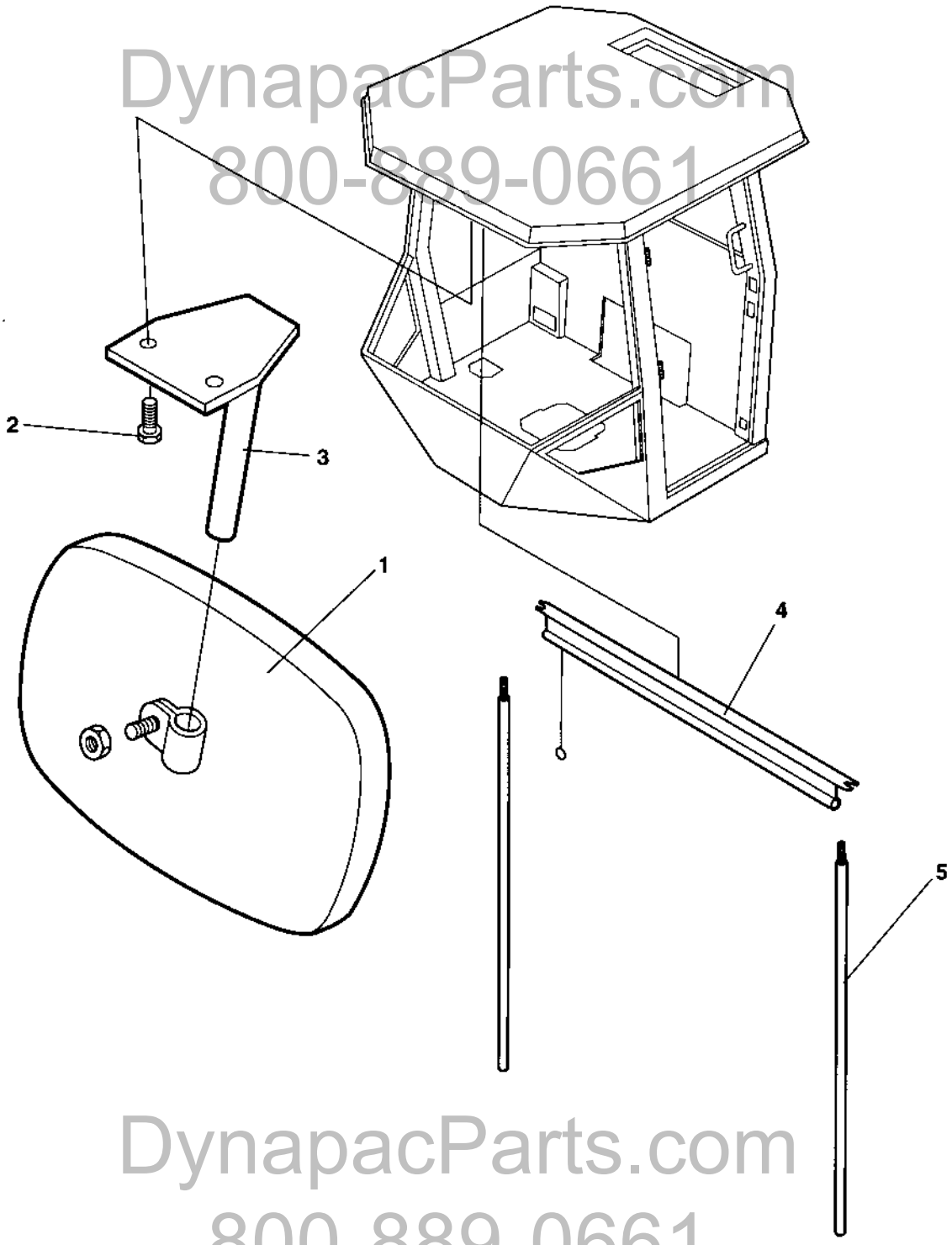

DynapacParts.com
800-889-0661

DynapacParts.com
800-889-0661

Cab Mirror, Sun curtain

Ref. No.	Part No.	Rem.	Qty	Description		Code
1	908624		1	Rear mirror		
2	500006		2	Screw	M5x16	
3	908623		1	Bracket		
4	938667		1	Sun curtain		
5	938668		1	Sun curtain, bar kit		

DynapacParts.com
800-889-0661

DynapacParts.com
800-889-0661

Cab Electric

17684

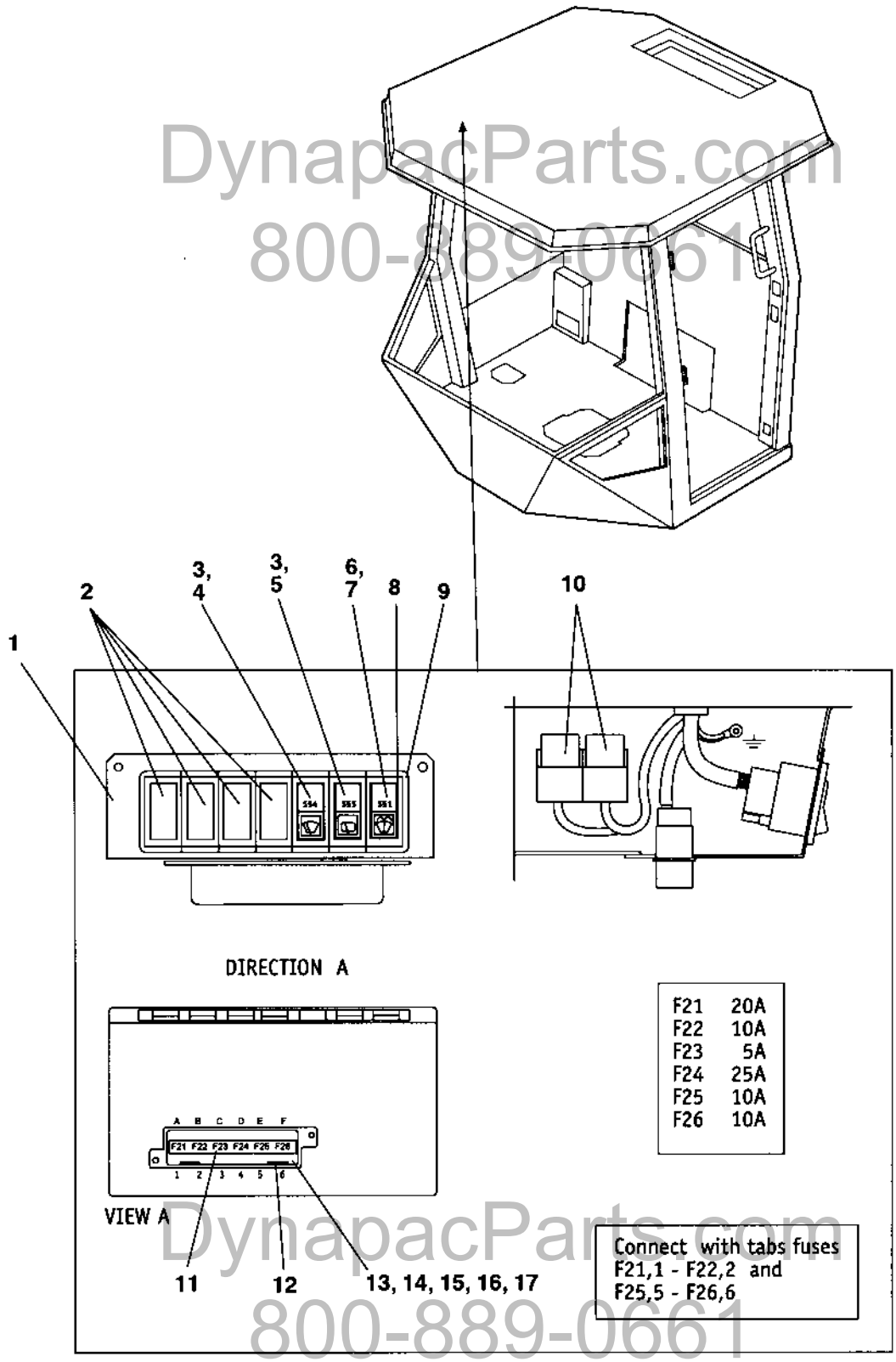

DynapacParts.com
800-889-0661

Cab Electric

Ref. No.	Part No.	Rem.	Qty	Description		Code
1	908611		1	Bracket		
2	908607		4	Cover		
3	908617		2	Switch		
4	908605		1	Symbol, wiper		
5	938687		1	Symbol, wiper		
6	908618		1	Symbol, washer		
7	908603		1	Switch		
8	908610		2	Modular panel		
9	908606		5	Modular panel		
10	938022		1	Relay		
11	938688		1	Decal		
12	901240		2	Connector		
13	908613		1	Fuse box		
14	901225		1	Fuse	5A	B
15	903741		1	Fuse	20A Yellow Medium	B
16	901229		1	Fuse	25A	B
17	901227		3	Fuse	10A	B

DynapacParts.com
800-889-0661

DynapacParts.com
800-889-0661

Cab Heater system

17685

DynapacParts.com
800-889-0661

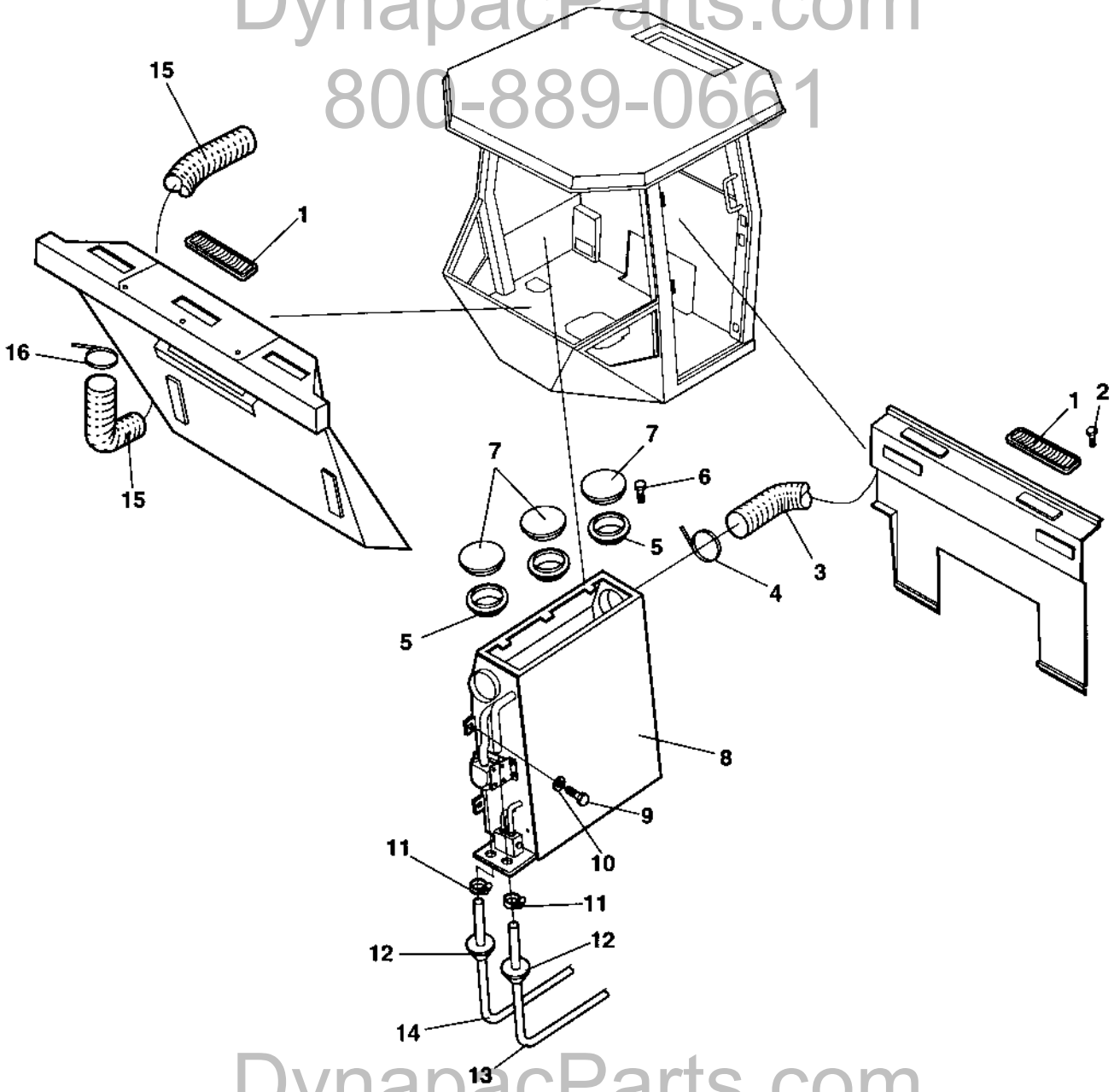

DynapacParts.com
800-889-0661

Cab Heater system

Ref. No.	Part No.	Rem.	Qty	Description		Code
1	908598		11	Nozzle		
2	938680		22	Screw		
3	935572		1	Hose		
4	935570		1	Clamp		
5	385443		3	Ring		
6	938691		9	Screw		
7	385442		3	Air nozzle		
8	385434		1	Cab heater, cpl (Page 250)		
9	500015		7	Screw	M6-1x30 8,8	
10	904229		7	Washer		
11	313003		2	Hose clamp		D
12	908496		5	Grommet		
13	937737	A	1	Hose		
14	937737	B	1	Hose		
15	908599		1	Hose		
16	908600		2	Clamp		

A) L=3,6 M
B) L=2,8 M

DynapacParts.com
800-889-0661

DynapacParts.com
800-889-0661

385434 Cab heater, cpl

17686

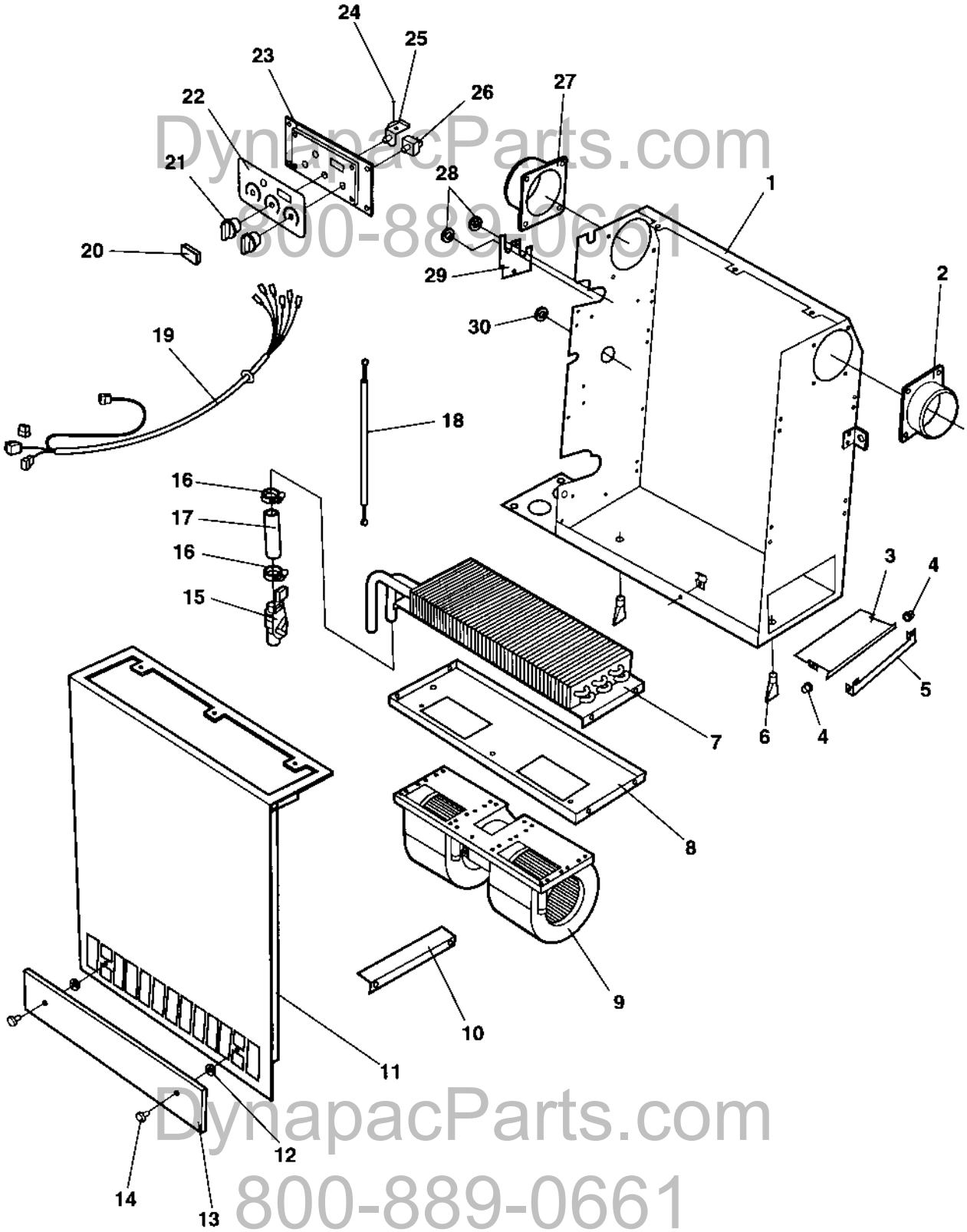

DynapacParts.com
800-889-0661
DynapacParts.com
800-889-0661

385434 Cab heater, cpl

Ref. No.	Part No.	Rem.	Qty	Description	Code
1	938625		1	Casing	
2	938633		1	Hose adapter	
3	938629		1	Cover	
4	938635		2	Sleeve	
5	938630		1	Bracket	
6	938636		2	Drain valve	
7	938639		1	Heater coil	
8	938627		1	Fan bracket	
9	938638		1	Fan	
10	938641		1	Coil bracket	
11	938626		1	Cover	
12	938643		1	Plug	
13	938640		1	Cover	
14	938634		2	Knob	
15	939693	A	1	Heater control valve	
16	313003		2	Hose clamp	D
17	384881		1	Hose	
18	938645		1	Bowden cable	
19	938647		1	Cable harness	
20	938643		1	Plug	
21	938620		2	Knob	
22	938618		1	Decal	
23	938617		1	Control panel	
24	385134		1	Lock washer	
25	938621		1	Rotary control	
26	938622		1	Switch	
27	938632		1	Hose adapter	
28	384927		2	Grommet	
29	938628		1	Cover	
30	938644		1	Cap	

A) Replaces Heater control valve P/N 938642.

DynapacParts.com
800-889-0661

DynapacParts.com
800-889-0661

Cab Cable harness

17694-1

DynapacParts.com
800-889-0661

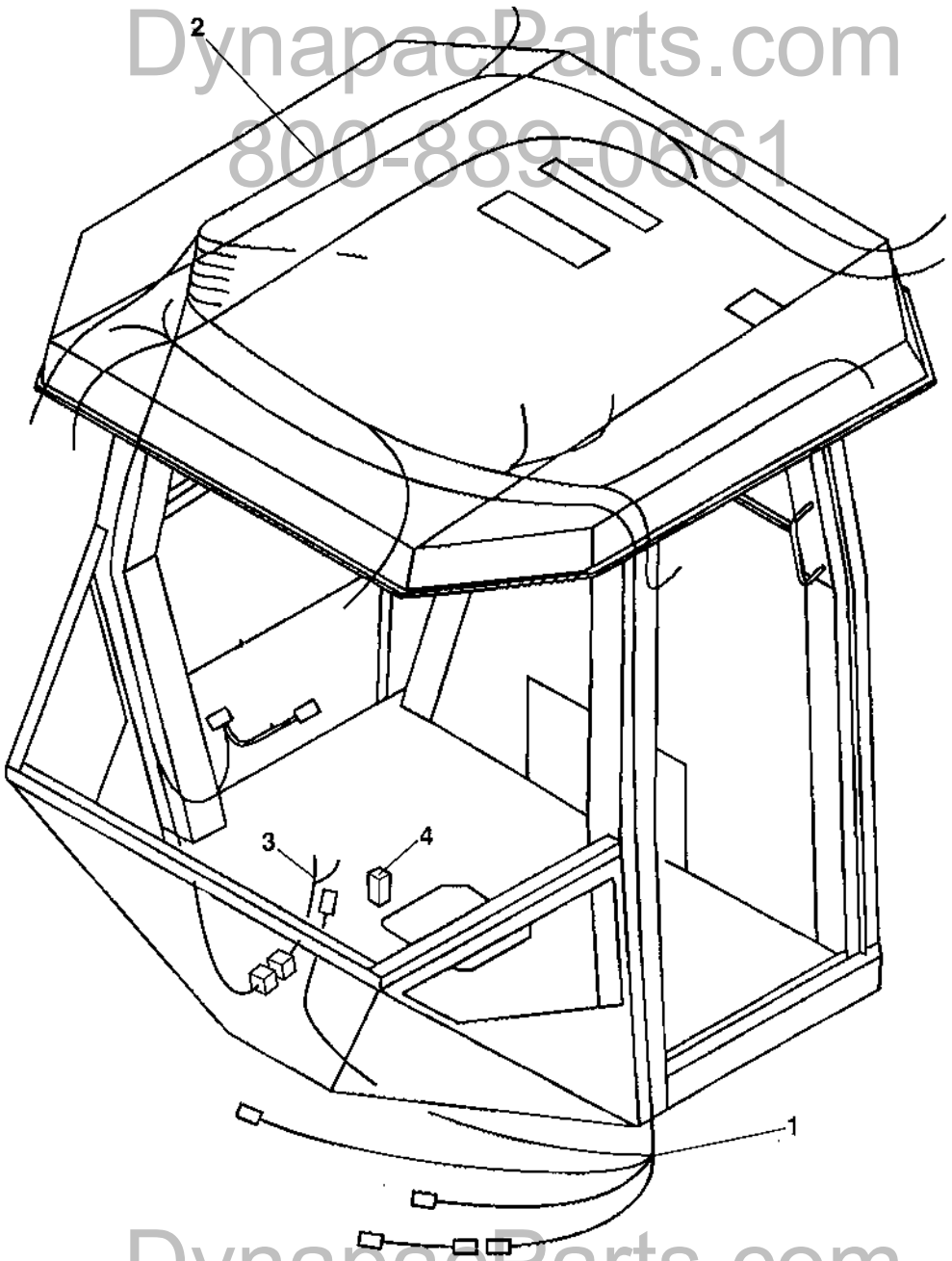

DynapacParts.com
800-889-0661

Cab Cable harness

Ref. No.	Part No.	Rem.	Qty	Description		Code
1	938689		1	Cable harness		
2	938690		1	Cable harness		
3	388981	A	1	Cable harness		
4	901227	A	1	Fuse	10A	B

A) Used together with 12V contact.

DynapacParts.com
800-889-0661

DynapacParts.com
800-889-0661

Cab Work lights

16007

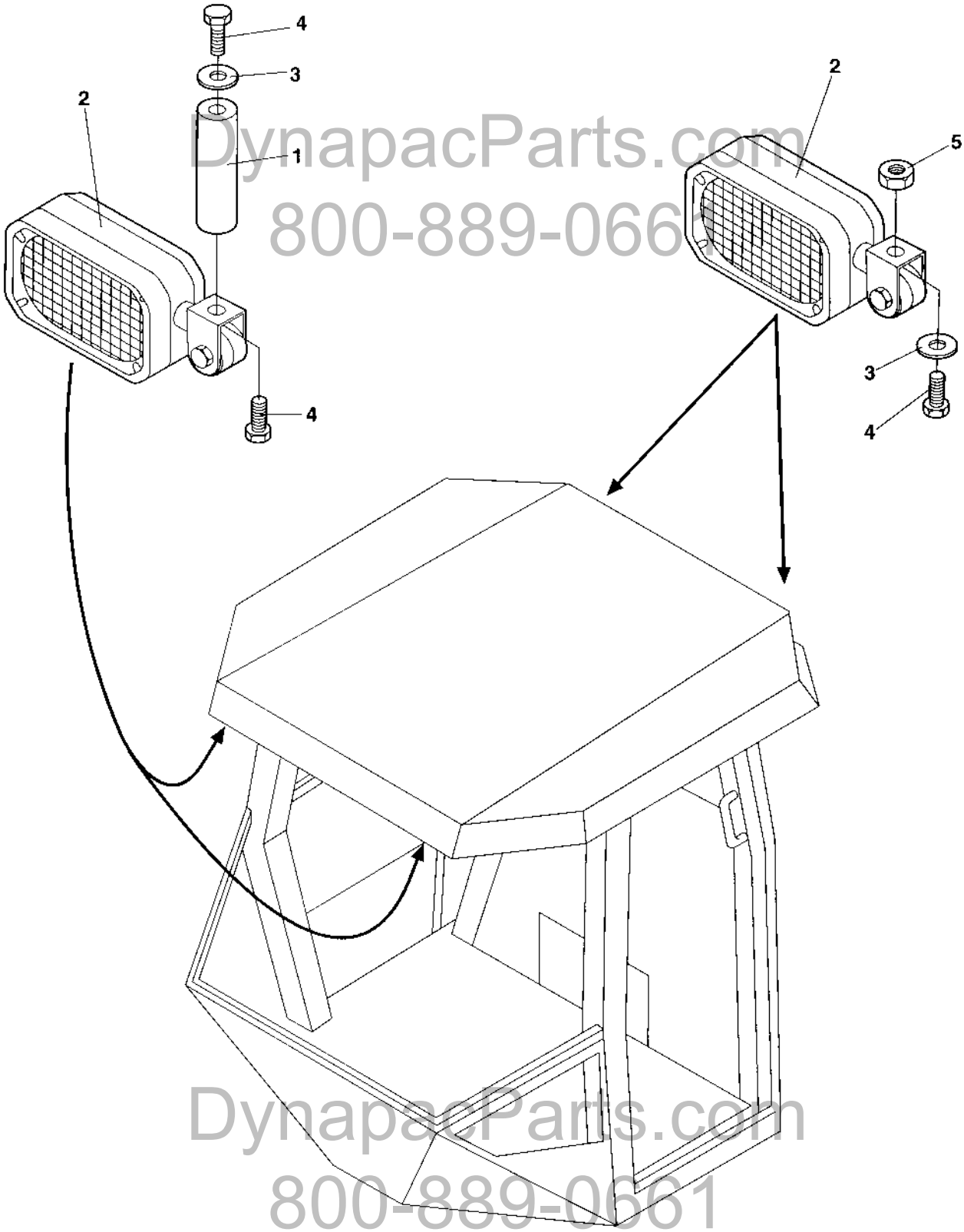

DynapacParts.com
800-889-0661
DynapacParts.com
800-889-0661

Cab Work lights

Ref. No.	Part No.	Rem.	Qty	Description	Code
1	908359		2	Distance	
2	908267		4	Working light	D
3	904229		4	Washer	
4	500019		6	Screw	
5	586003		2	Lock nut	

DynapacParts.com
800-889-0661

DynapacParts.com
800-889-0661

Cab Exterior, rear mirror

16009

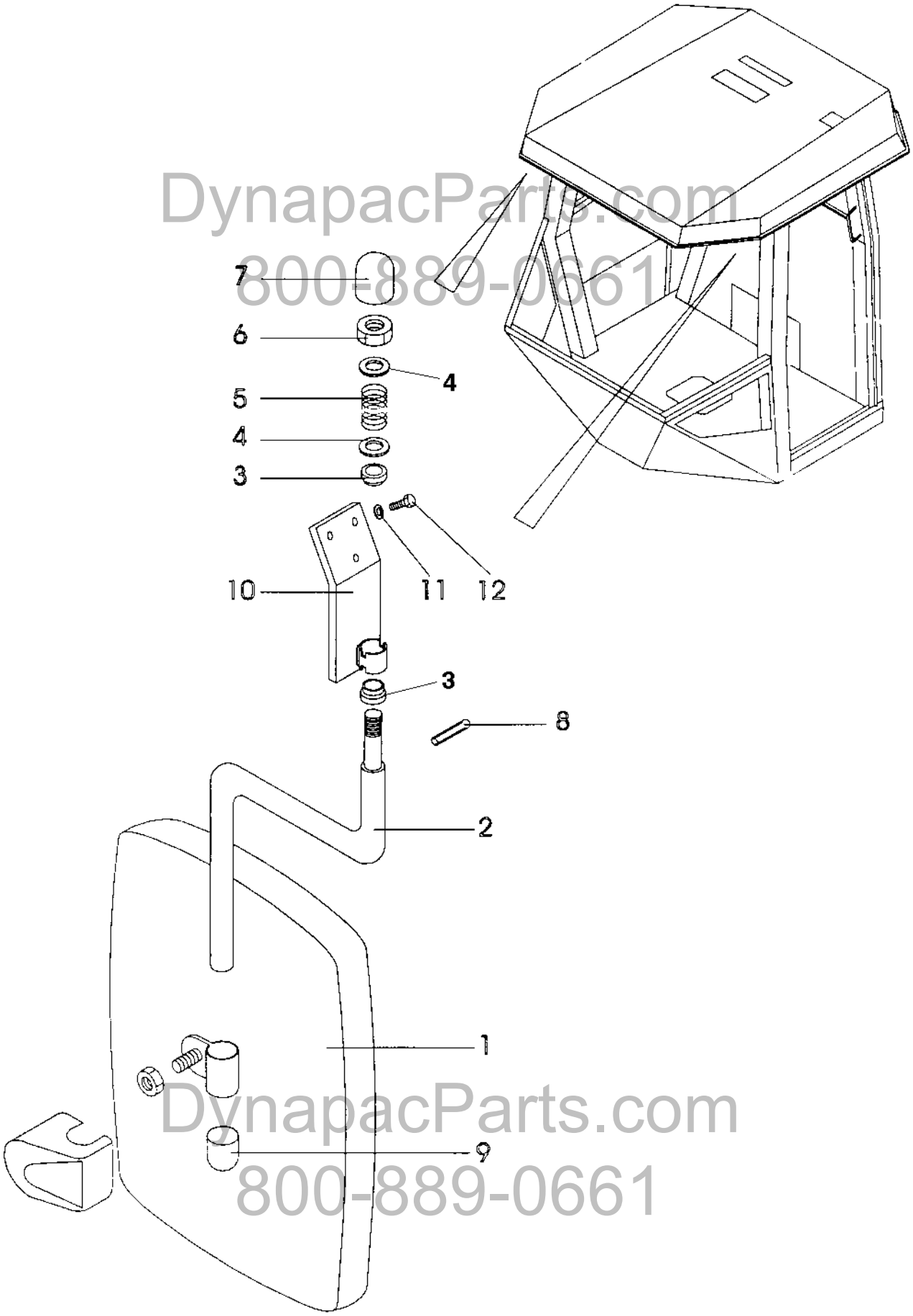

DynapacParts.com
800-889-0661
DynapacParts.com
800-889-0661

Cab Exterior, rear mirror

Ref. No.	Part No.	Rem.	Qty	Description	Code
1	371730	A	2	Rear view mirror, cpl	
	908265		1	.Rear view mirror	
2	908355		1	.Arm	
3	908625		2	.Sleeve	
4	904232		2	.Washer	
5	908626		1	.Spring	
6	586021		1	.Nut	M16
7	908627		1	.Cap	
8	629066		1	.Spirol pin	
9	908628		1	.Cap	
10	908361		1	.Bracket	
11	904229		6	Washer	
12	500019		6	Screw	

A) Option

DynapacParts.com
800-889-0661

DynapacParts.com
800-889-0661

Radio and cassette/cd player Option

15883-1

DynapacParts.com
800-889-0661

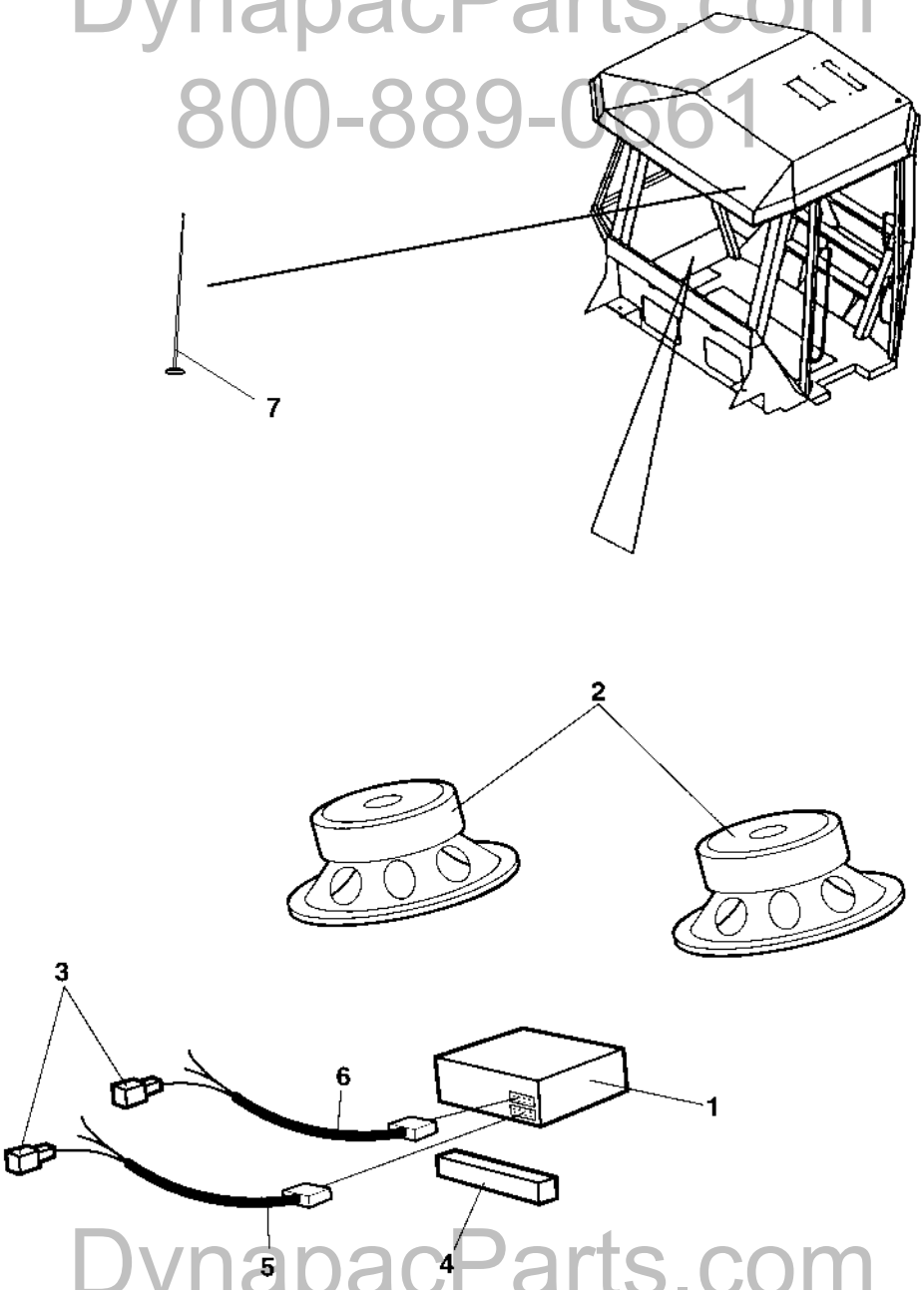

DynapacParts.com
800-889-0661

Radio and cassette/cd player Option

Ref. No.	Part No.	Rem.	Qty	Description	Code
1	904939		1	Radio and cassette player	
	791967		1	Radio and cd player	
2	791968	A	1	Loud speakers	
3	927403	B	7	Terminal	
4	202043	C	1XL	Rubber strip	
5	904969		1	Power connection	
6	904970		1	Speaker connection	
7	937165		1	Antenna	

A) 2 pcs
B) Female
C) L=0.2 m

DynapacParts.com
800-889-0661

DynapacParts.com
800-889-0661

Cab, 12V contact

17912

DynapacParts.com
800-889-0661

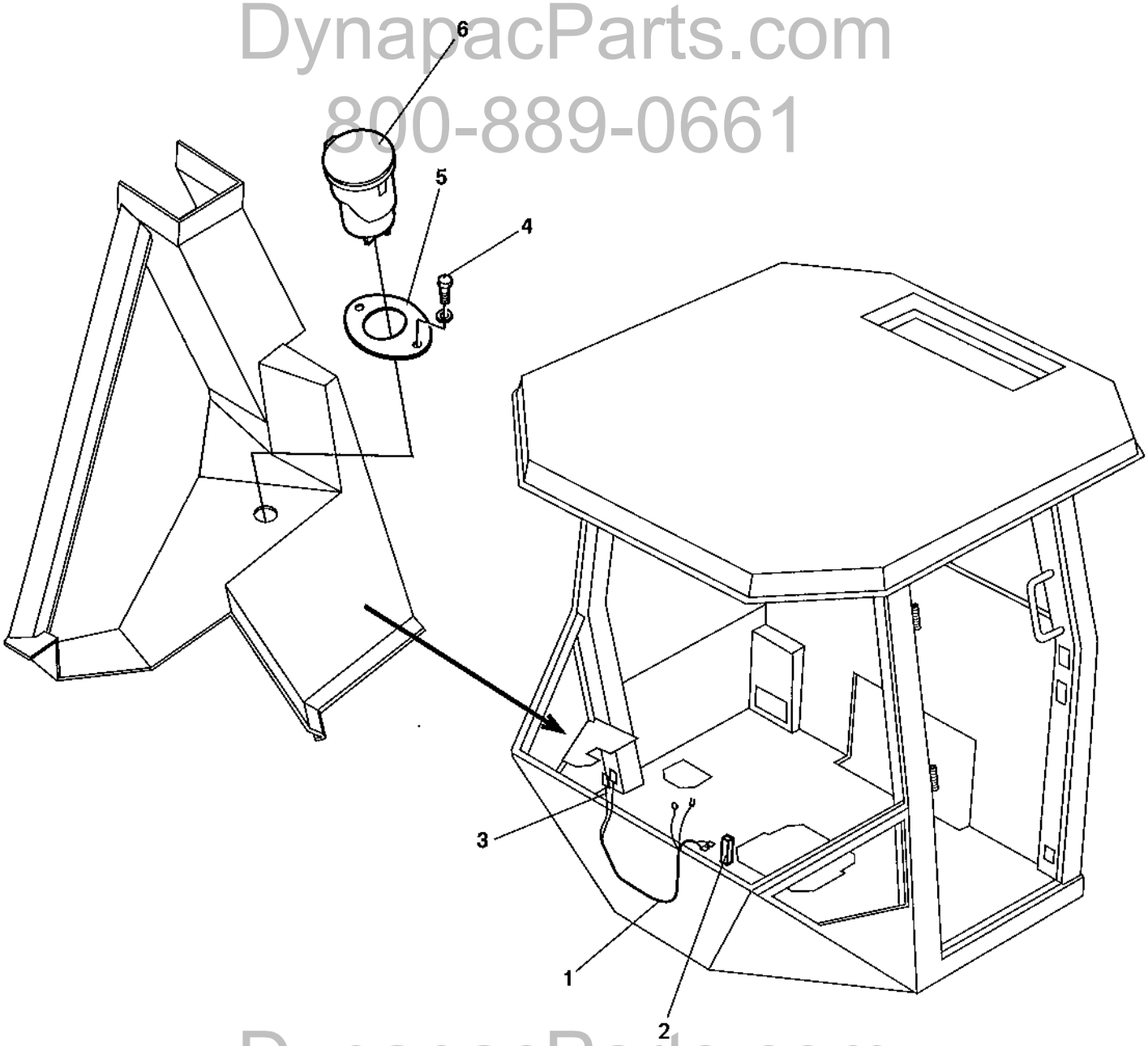

DynapacParts.com
800-889-0661

Cab, 12V contact

Ref. No.	Part No.	Rem.	Qty	Description		Code
1	388981		1	Cable harness		
2	901227		1	Fuse	10A	B
3	939603		1	Cable harness		
4	938691		2	Screw		
5	939521		1	Sign	12V	
6	939522		1	Contact	12V	

DynapacParts.com
800-889-0661

DynapacParts.com
800-889-0661

Rear mirror Option

17120

DynapacParts.com
800-889-0661

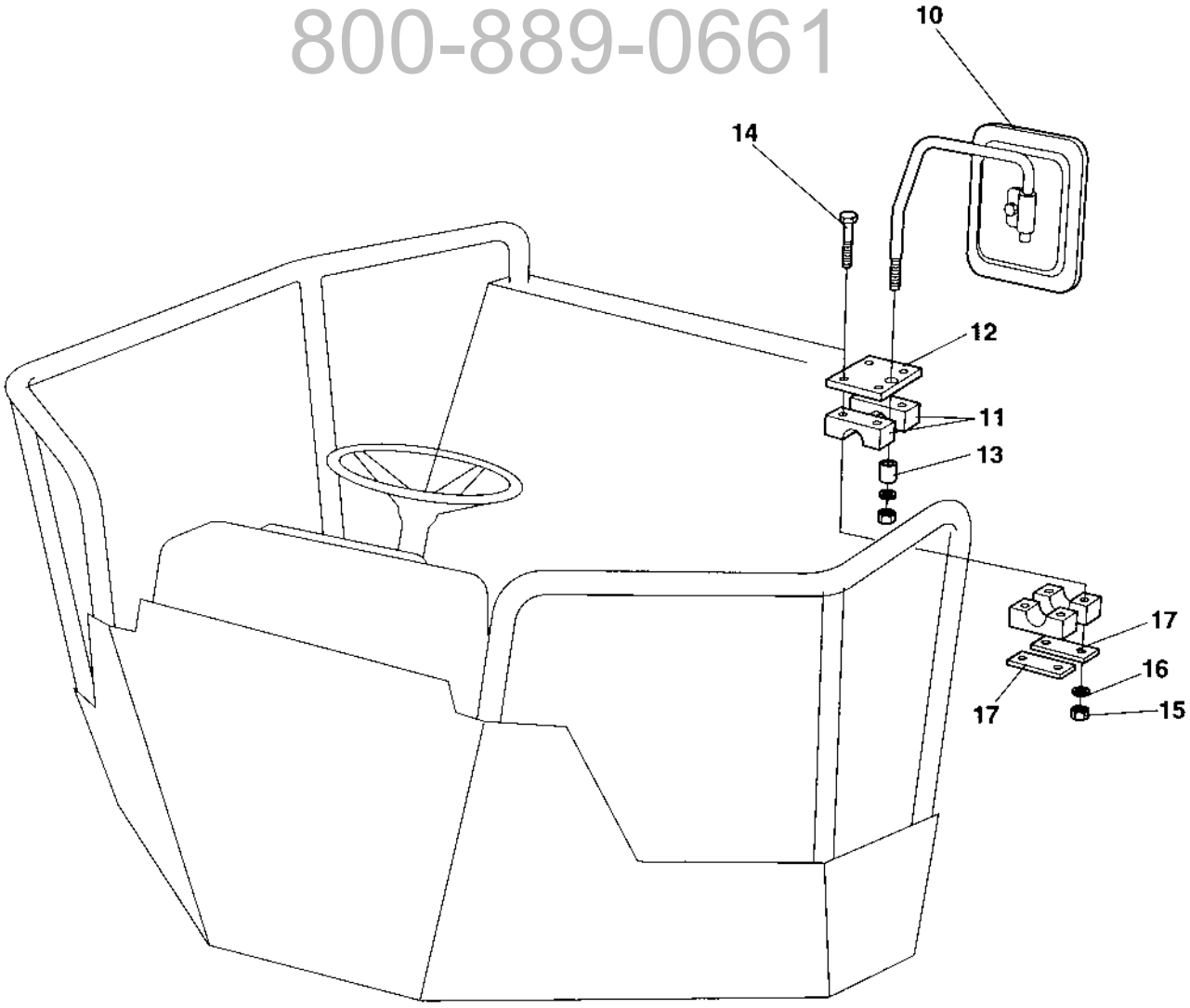

DynapacParts.com
800-889-0661

Rear mirror Option

Ref. No.	Part No.	Rem.	Qty	Description		Code
10	355705		2	Rear mirror		D
11	904340		4	Pipe clamp		
12	374577		2	Holder plate		
13	343748		2	Spacer sleeve		
14	500292		8	Screw	M6x75	
15	586002		8	Lock nut		
16	904228		8	Washer		
17	924791		4	Cover plate		

DynapacParts.com
800-889-0661

DynapacParts.com
800-889-0661

Simple Cab mounting Option

16966

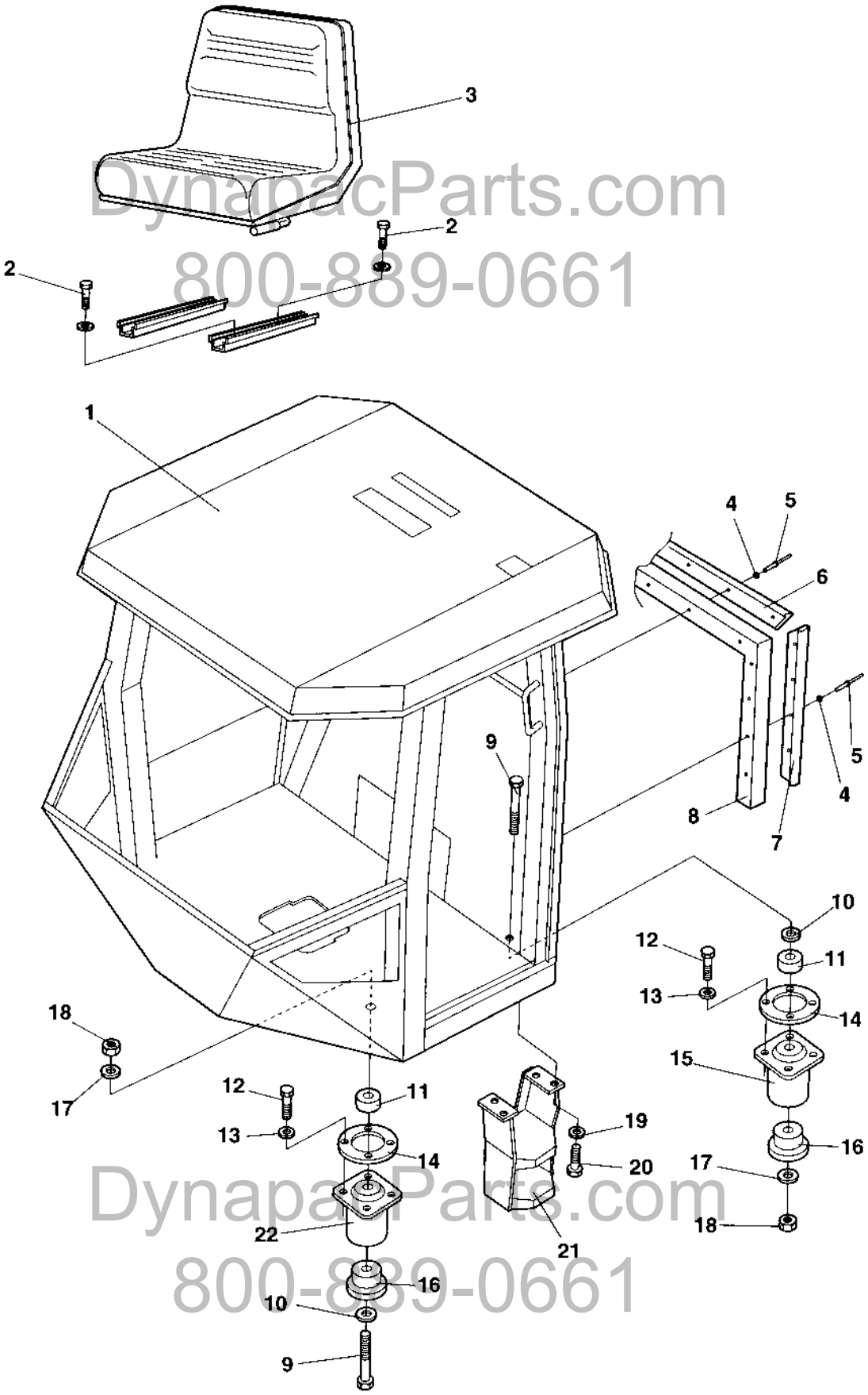

DynapacParts.com
800-889-0661
DynapacParts.com
800-889-0661

Simple Cab mounting Option

Ref. No.	Part No.	Rem.	Qty	Description		Code
1				Cab (Page 266)	380656	
2	508005		4	Screw		
3	370234		1	Drivers seat		
	936283		1	.Seat switch		D
	909535	E,F	1	.Sliding rail	Left	D
	909536	G	1	.Sliding rail	Right	D
4	927974		13	Washer	5x19x1	
5	904433		13	Blind rivet		
6	372785		1	List		
7	372786		2	List		
8	372494	A	N	Rubber strip		
9	903905		4	Screw		
10	904233		4	Washer		
11	370258		4	Spacer washer		
12	500121		16	Screw	M12x65 8,8	
13	904231		16	Washer		
14	359998		4	Back-up ring		
15	374606	B	2	Shock absorber	Green	D
16	372457		4	Back-up ring		
17	903290		4	Washer	21x36x6	
18	901145		4	Lock nut	M20-10	
19	904230		4	Washer		
20	500029		4	Screw		
21	376252		1	Step		
22	374607	C	2	Shock absorber	Yellow	D

A) L=2400 mm
B) Rear
C) Front
E) With handle
F) Left
G) Right

DynapacParts.com
800-889-0661

DynapacParts.com
800-889-0661

DynapacParts.com
800-889-0661

DynapacParts.com
800-889-0661

Cab 380656

Ref. No.	Part No.	Rem.	Qty	Description	Code
130				Cab (Page 268)	Screens
140				Cab (Page 272)	Door, left side
150				Cab (Page 274)	Interior rear mirror
170				Wiper arm with blade, front (Page 276)	
180				Cab (Page 278)	Electric

DynapacParts.com
800-889-0661

DynapacParts.com
800-889-0661

Cab Screens

17435

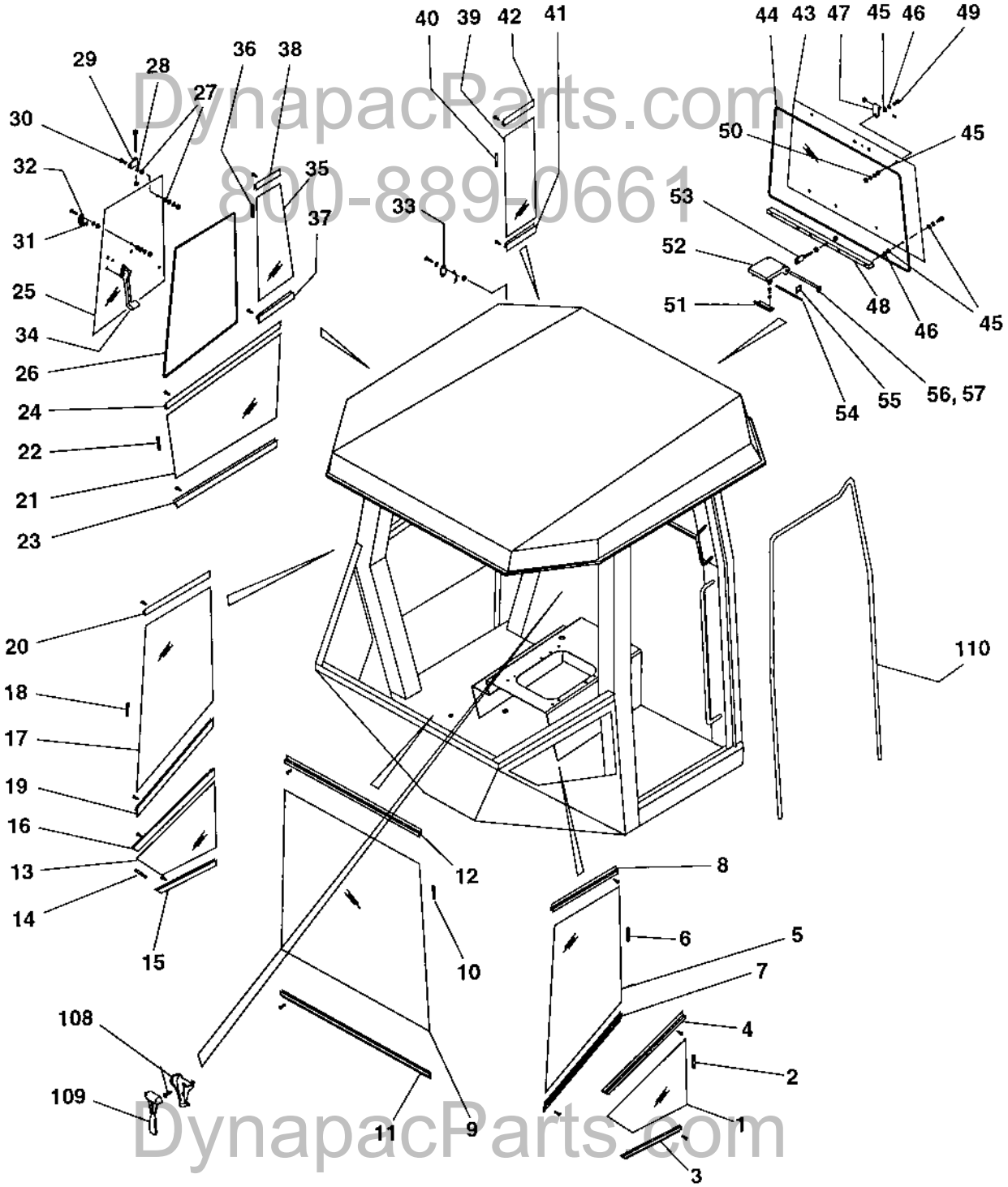

DynapacParts.com
800-889-0661
DynapacParts.com
800-889-0661

Cab Screens

Ref. No.	Part No.	Rem.	Qty	Description	Code
1	937380		1	Screen	
2	908545		XL	Seal list	
3	935278		1	List	
4	935279		1	List	
5	937381		1	Screen, left	
6	908545		XL	Seal list	
7	935280		1	List	
8	935281		1	List	
9	937382		1	Screen	
10	908545	B	1	Seal list	
11	935282		1	List	
12	935283		1	List	
13	937383		1	Screen	
14	908545		XL	Seal list	
15	935284		1	List	
16	935285		1	List	
17	937384		1	Screen	
18	908545	A	1	Seal list	
19	935286		1	List	
20	935287		1	List	
21	937385		1	Screen	
22	908545	A	1	Seal list	
23	935288		1	List	
24	935289		1	List	
25	937386		1	Screen	
26	908499	B	1	Rubber list	
27	935271		8	Washer, Flexible rubber	
28	935272		8	Washer, Black	
29	935273		2	Hinge	
30	935274		2	Screw	
31	935275		1	Rubber washer	
32	935276		1	Bracket	
33	935277		1	Lock pin	
34	935290		1	Window lock, right	
35	937387		1	Screen	
36	908545	A	1	Seal list	
37	935291		1	List	
38	935292		1	List	
39	937388	A	1	Screen	
40	908545	A	1	Seal list	
41	935293		1	List	
42	935294		1	List	
43	937389		1	Screen	
44	908499	C	1	Rubber list	
45	935271		12	Washer, Flexible rubber	
46	935272		12	Washer, Black	
47	935273		2	Hinge	
48	935295		1	Screen holder	
49	935274		6	Screw	
50	935296		2	Washer	
51	935297		1	Bracket	
52	935298		2	Bracket	
53	935299		1	Bolt	
54	935300		1	Shaft	
55	935301		2	Lock	
56	935302		1	Rod	

DynapacParts.com
800-889-0661
DynapacParts.com
800-889-0661

A) L=1 m
B) L=2 m
C) L=3 m

Cab Screens

17435

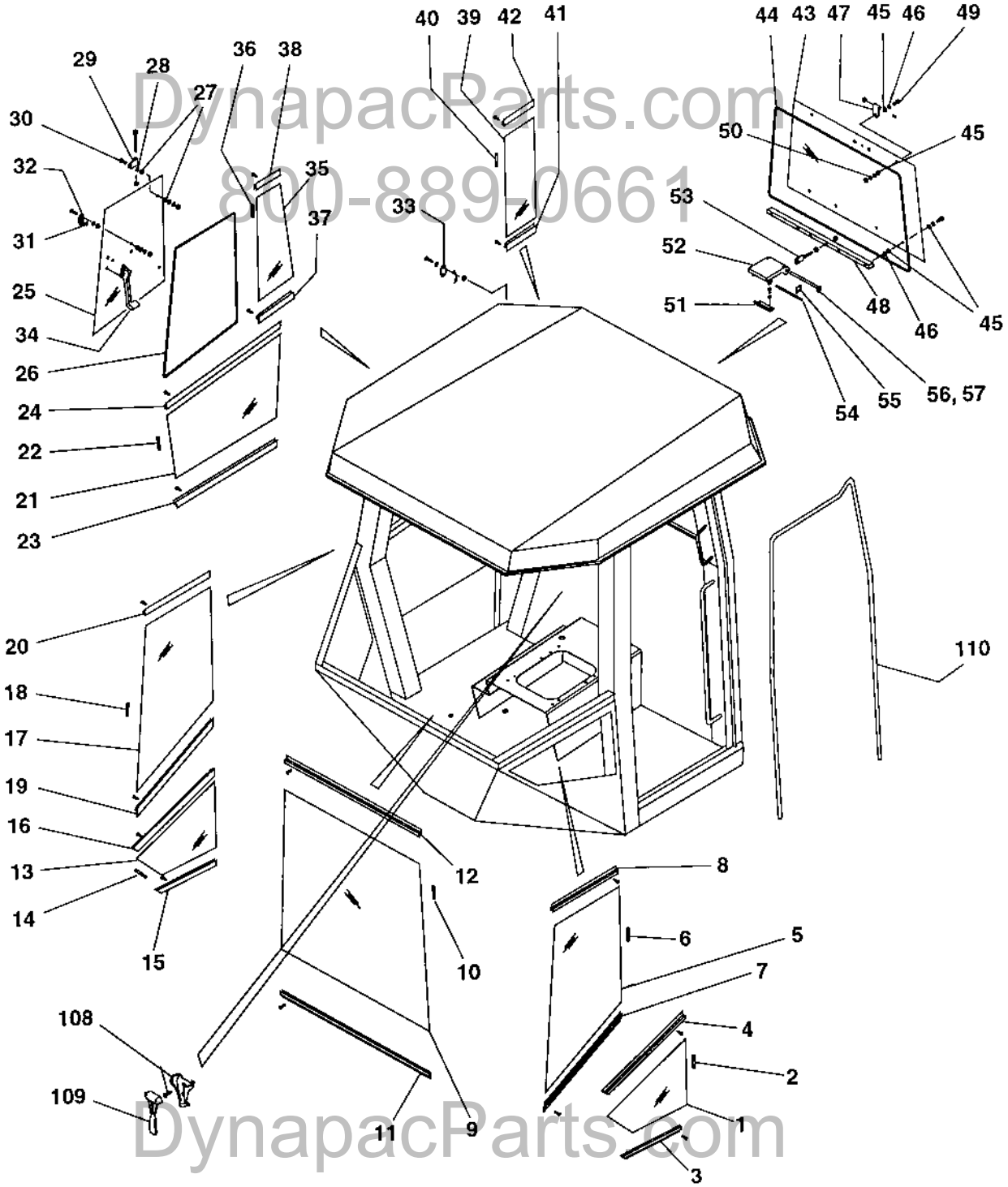

DynapacParts.com
800-889-0661
DynapacParts.com
800-889-0661

Cab Screens

Ref. No.	Part No.	Rem.	Qty	Description	Code
57	935303		1	Ring	
108	908506		1	Holder	
109	908507		1	Emergency hammer	
110	908499	D	1	Rubber list	

D) L=5 m

DynapacParts.com
800-889-0661

DynapacParts.com
800-889-0661

Cab Door, left side

16967-1

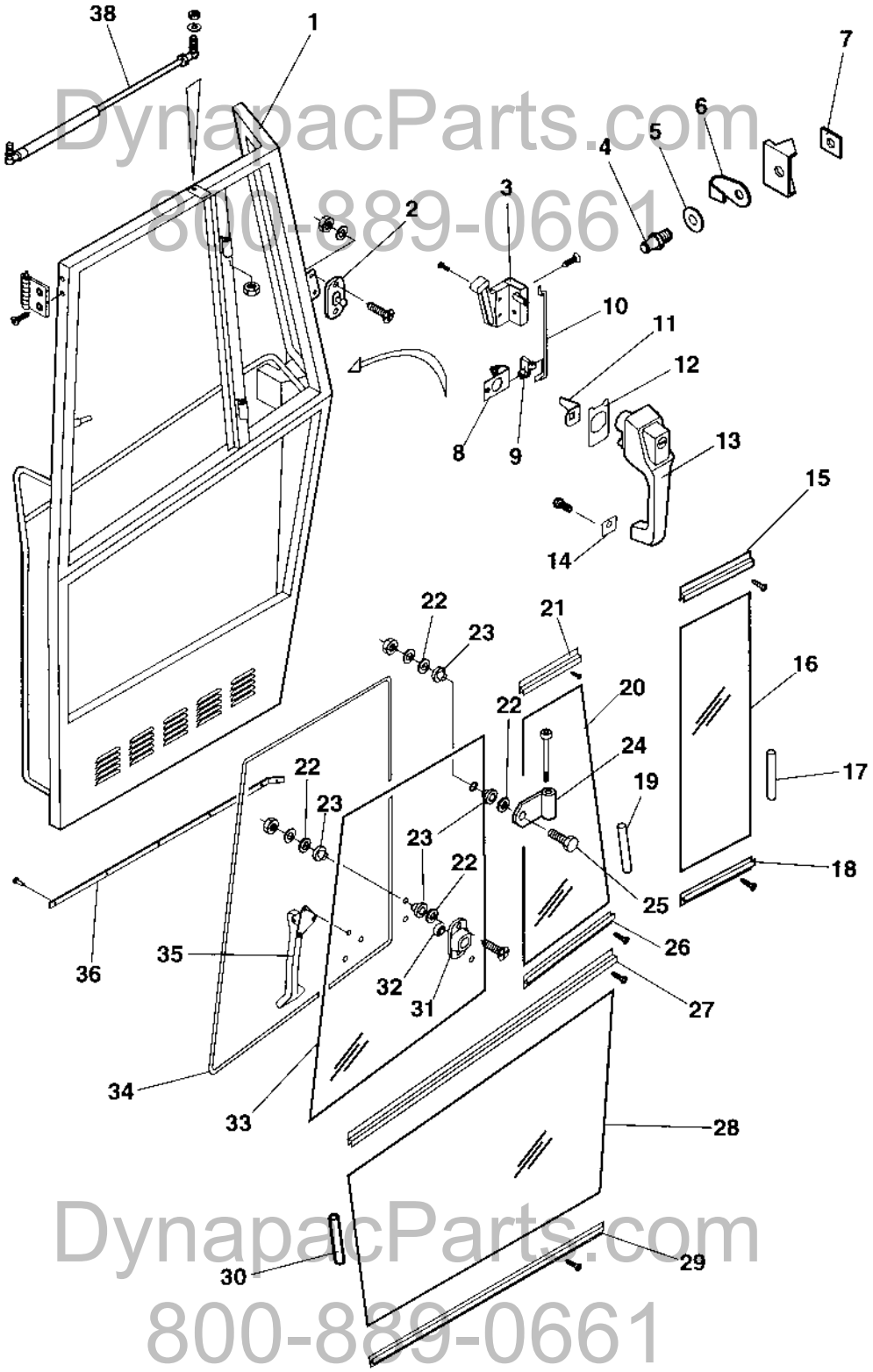

DynapacParts.com
800-889-0661
DynapacParts.com
800-889-0661

Cab Door, left side

Ref. No.	Part No.	Rem.	Qty	Description	Code
	940678		1	Door, cpl	
1	938045		1	.Door frame	
2	935277		1	.Lock pin	
3	938017		1	.Lock	
4	908580		1	.Lock pin	
5	908581		1	.Washer	
6	908582		1	.Cover	
7	908583		1	.Bracket	
8	935248		1	.Turning mechanism	
9	935249		1	.Retainer	
10	935250		1	.Rod	
11	935247		1	.Leader	
12	935246		1	.Seal	
13	935244		1	.Door handle with key	
14	935245		1	.Seal	
15	935268		1	.List	
16	937391		1	.Screen	
17	908545	A	1	.Seal list	
18	935267		1	.List	
19	908545	A	1	.Seal list	
20	937392		1	.Screen	
21	935270		1	.List	
22	935272		8	.Washer, Black	
23	935271		8	.Washer, Flexible rubber	
24	935273		2	.Hinge	
25	935274		2	.Screw	
26	935269		1	.List	
27	935266		1	.List	
28	937390		1	.Screen	
29	935265		1	.List	
30	908545	A	1	.Seal list	
31	935276		1	.Bracket	
32	935275		1	.Rubber washer	
33	937393		1	.Screen	
34	908499	B	1	.Rubber list	
35	935253		1	.Lock	
36	938101		XL	.Brush profile	
38	938018		1	.Gas spring	

A) L=1 m
B) L=2 m

DynapacParts.com
800-889-0661

DynapacParts.com
800-889-0661

Cab Interior rear mirror

16008

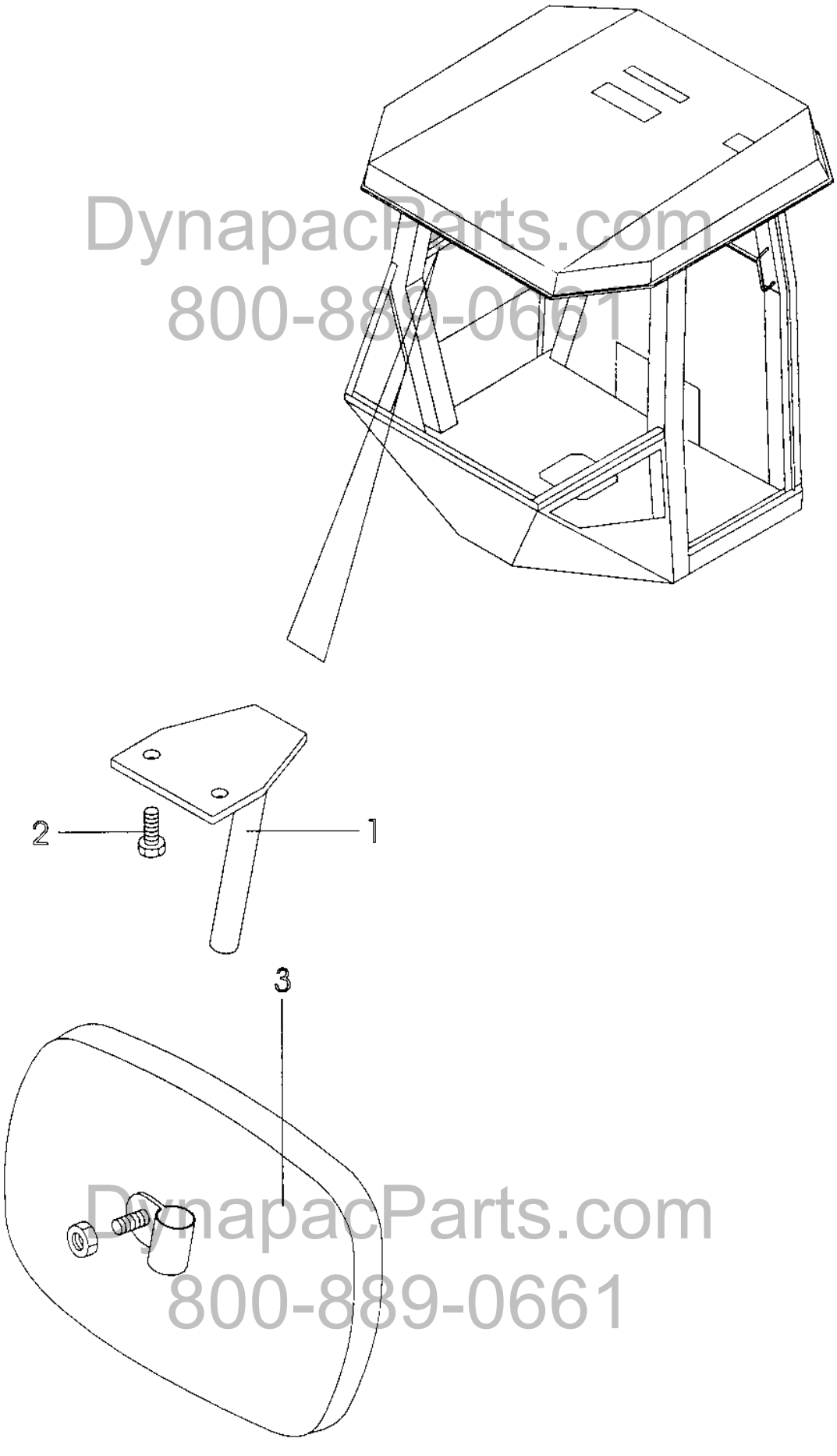

DynapacParts.com
800-889-0661

DynapacParts.com
800-889-0661

Cab Interior rear mirror

Ref. No.	Part No.	Rem.	Qty	Description		Code
1	908623		1	Bracket		
2	535005		2	Screw	M5x12	
3	908624		1	Rear mirror		

DynapacParts.com
800-889-0661

DynapacParts.com
800-889-0661

Wiper arm with blade, front

16968

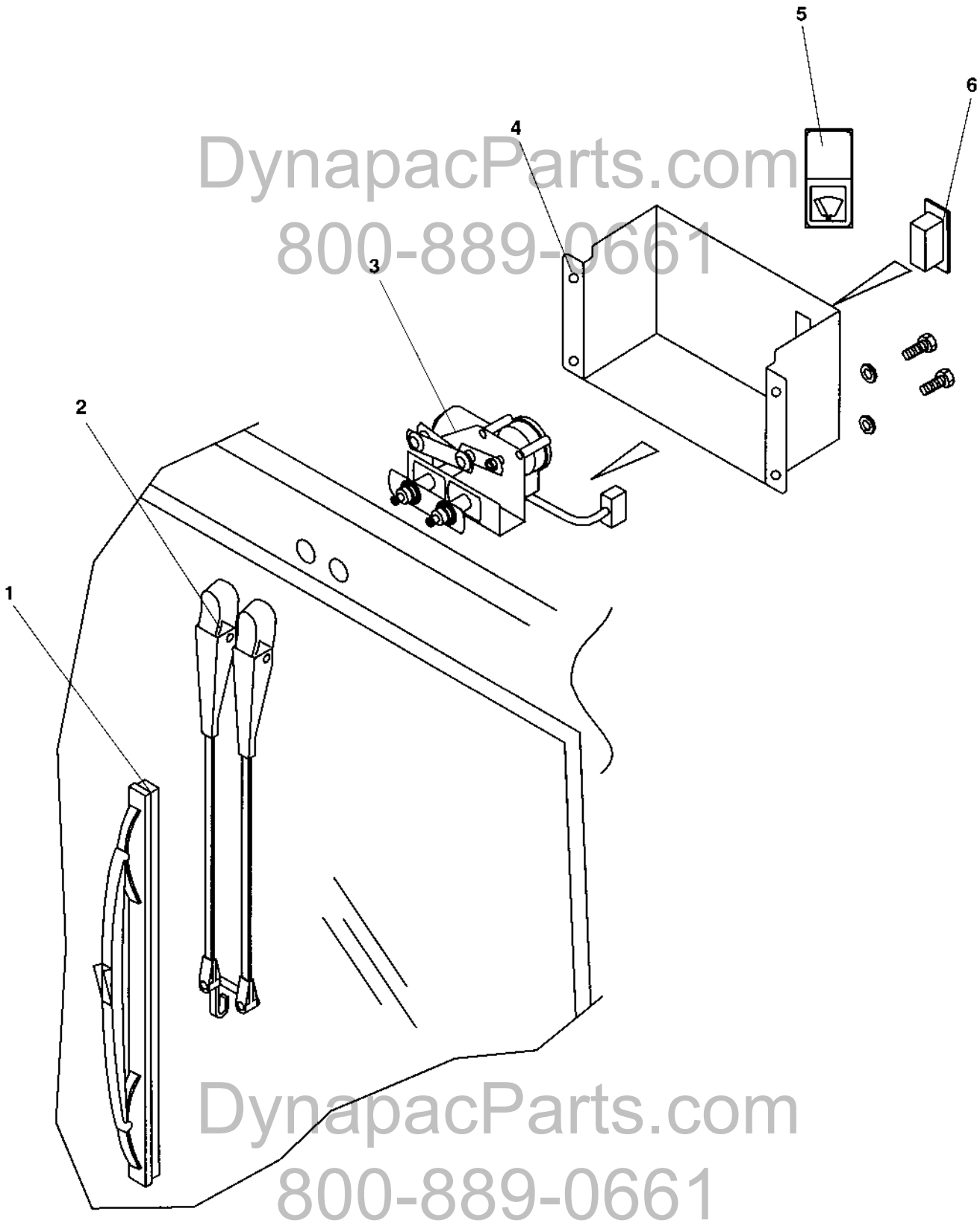

DynapacParts.com
800-889-0661

DynapacParts.com
800-889-0661

Wiper arm with blade, front

Ref. No.	Part No.	Rem.	Qty	Description	Code
1	905306		1	Wiper blade	
2	905305		1	Wiper arm	
3	905304		1	Wiper motor	
4	937871		1	Cover	
5	908605		1	Symbol, wiper	
6	908617		1	Switch	

DynapacParts.com
800-889-0661

DynapacParts.com
800-889-0661

Cab Electric

17377

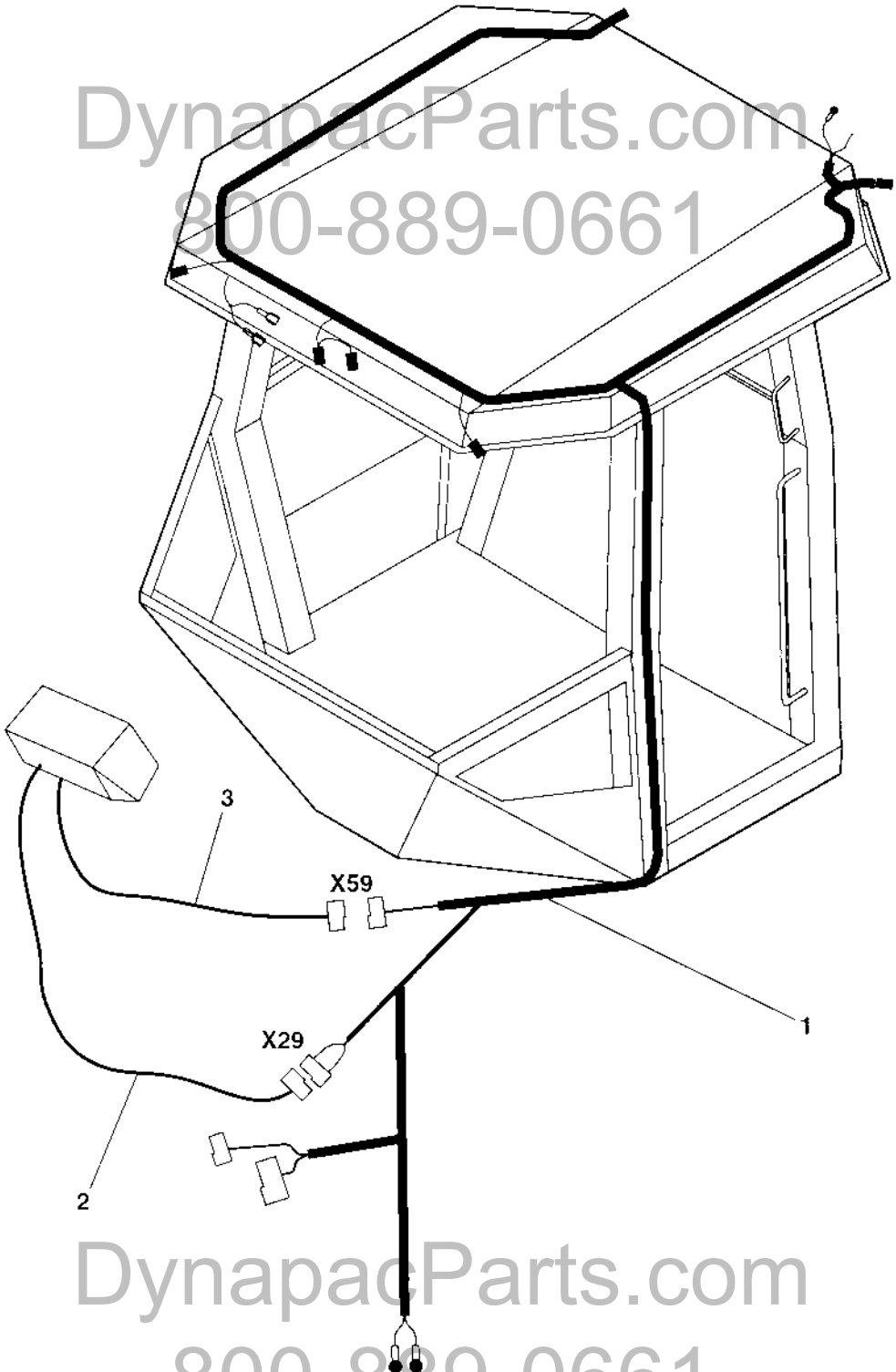

DynapacParts.com
800-889-0661
DynapacParts.com
800-889-0661

Cab Electric

Ref. No.	Part No.	Rem.	Qty	Description	Code
1	937870	A	1	Cable harness	
2	384403	B	1	Cable harness	
3	384402	C	1	Cable harness	

A) Main supply
B) Horn
C) Windshield wiper

DynapacParts.com
800-889-0661

DynapacParts.com
800-889-0661

Cab mounting

18429

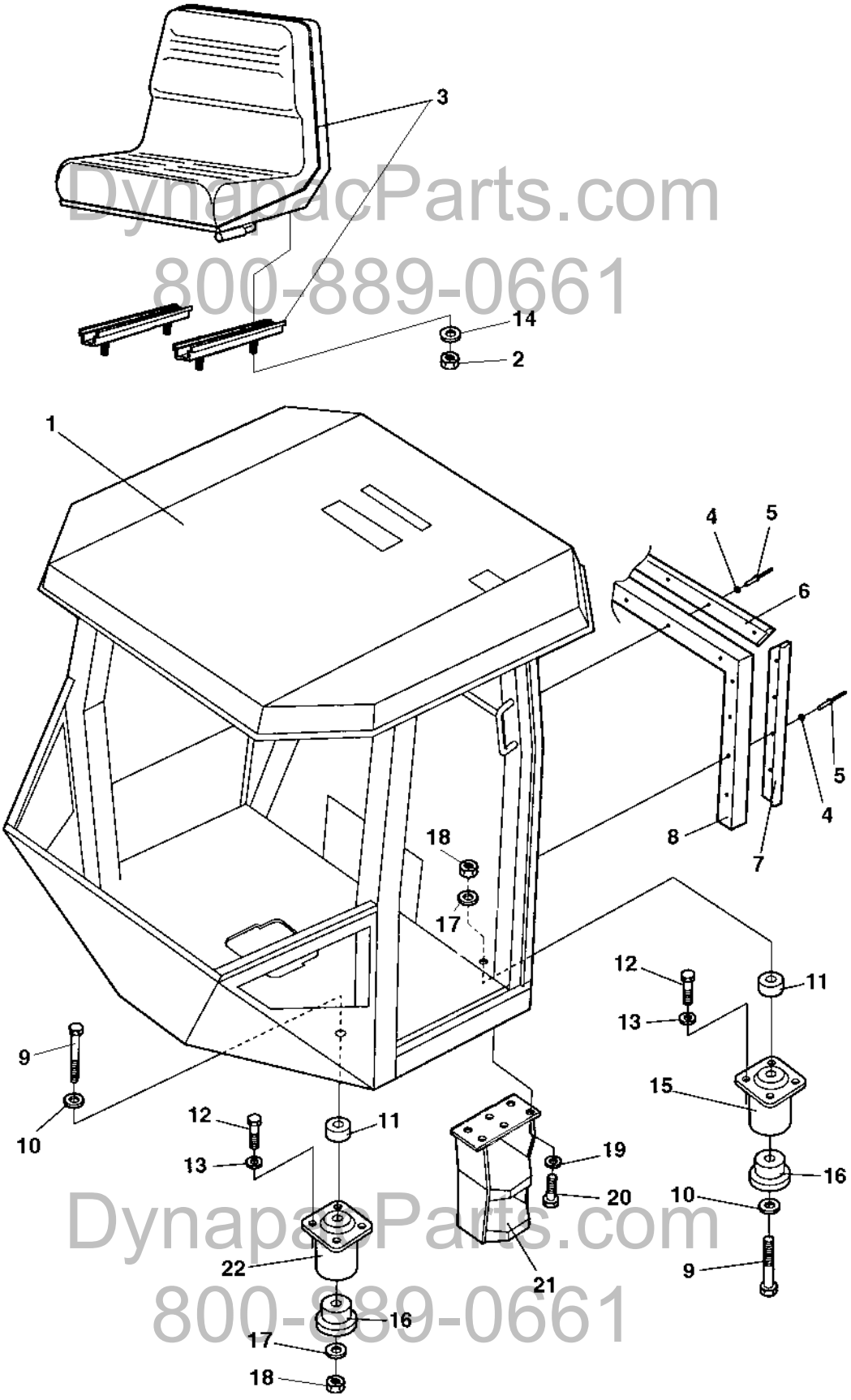

DynapacParts.com
800-889-0661
DynapacParts.com
800-889-0661

Cab mounting

Ref. No.	Part No.	Rem.	Qty	Description		Code
1				Cab (Page 282)	378308	
2	570005		4	Nut		
3	377518	D	1	Drivers seat, cpl		
4	927974		13	Washer	5x19x1	
5	904433		13	Blind rivet		
6	372785		1	List		
7	382582		2	List		
8	372494	A	N	Rubber strip		
9	791218		4	Screw	M20x200	
10	904233		4	Washer		
11	384759		4	Spacer		
12	500195		16	Screw		
13	904231		16	Washer		
14	904229		4	Washer		
15	374606	B	2	Shock absorber	Green	D
16	372457		4	Back-up ring		
17	903290		4	Washer	21x36x6	
18	901145		4	Lock nut	M20-10	
19	904230		6	Washer		
20	500029		6	Screw		
21	376252		1	Step		
22	374607	C	2	Shock absorber	Yellow	D
23	382397		2	Spacer		

A) L=2400 mm
B) Rear
C) Front
D) Option

DynapacParts.com
800-889-0661

DynapacParts.com
800-889-0661

DynapacParts.com
800-889-0661

DynapacParts.com
800-889-0661

Cab 378308

Ref. No.	Part No.	Rem.	Qty	Description	Code
130				Cab (Page 284)	Screens
140				Cab (Page 288)	Door, left side
150				Cab (Page 274)	Interior rear mirror
170				Wiper arm with blade, front (Page 276)	
180				Cab (Page 278)	Electric

DynapacParts.com
800-889-0661

DynapacParts.com
800-889-0661

Cab Screens

18431

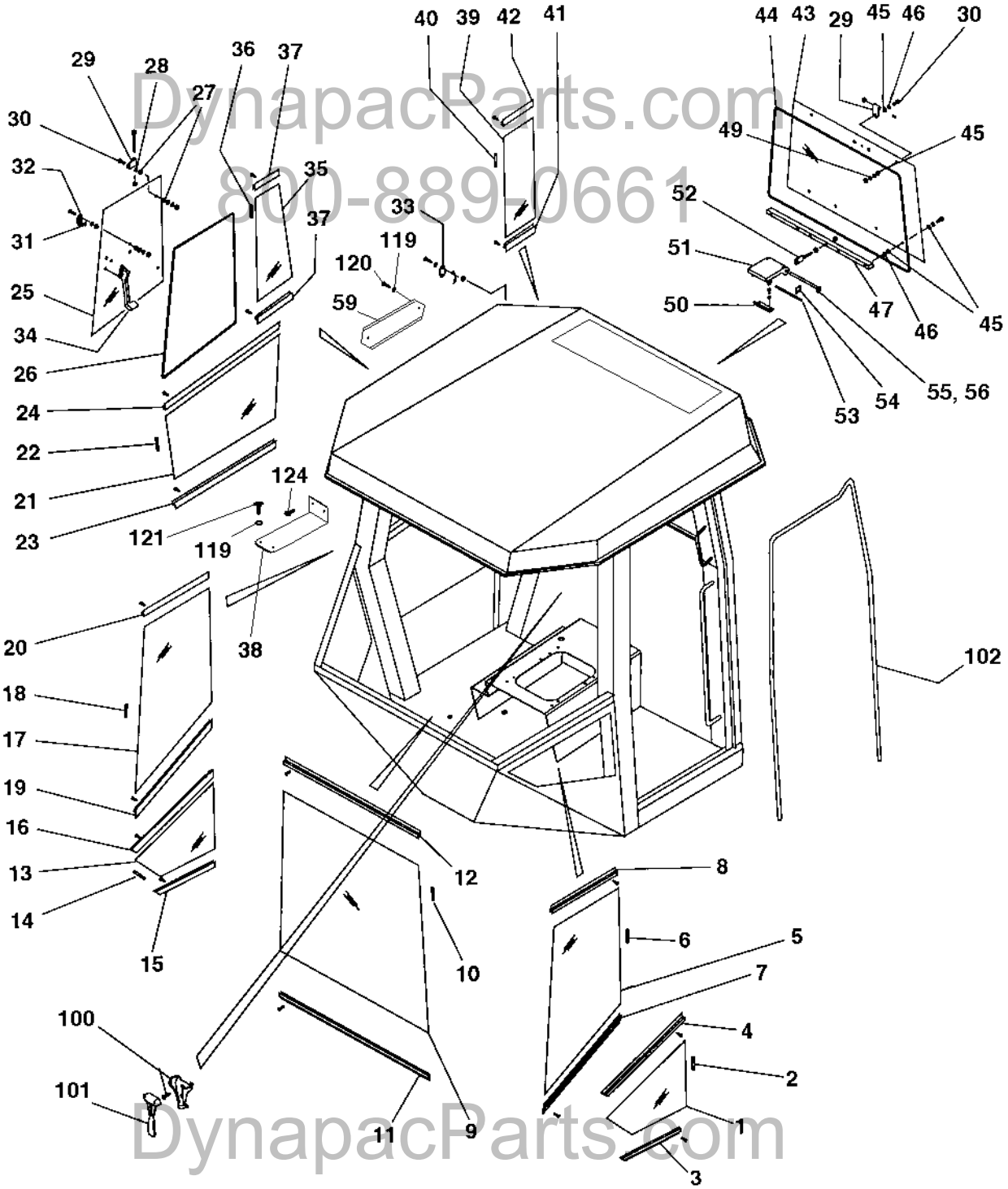

DynapacParts.com
800-889-0661
DynapacParts.com
800-889-0661

Cab Screens

Ref. No.	Part No.	Rem.	Qty	Description	Code
1	937380		1	Screen	
2	908545		XL	Seal list	
3	935278		1	List	
4	935279		1	List	
5	937381		1	Screen, left	
6	908545		XL	Seal list	
7	935280		1	List	
8	935281		1	List	
9	937382		1	Screen	
10	908545	D	1	Seal list	
11	935282		1	List	
12	935283		1	List	
13	937383		1	Screen	
14	908545		XL	Seal list	
15	935284		1	List	
16	935285		1	List	
17	937384		1	Screen	
18	908545	C	1	Seal list	
19	935286		1	List	
20	935287		1	List	
21	937385		1	Screen	
22	908545	A	1	Seal list	
23	935288		1	List	
24	935289		1	List	
25	938290		1	Screen	
26	908499	E	1	Rubber list	
27	935271		8	Washer, Flexible rubber	
28	935272		8	Washer, Black	
29	935273		4	Hinge	
30	935274		4	Screw	
31	935275		1	Rubber washer	
32	935276		1	Bracket	
33	935277		1	Lock pin	
34	935290		1	Window lock, right	
35	938291		1	Screen	
36	908545	B	1	Seal list	
37	935291		1	List	
38	379608		1	Cover	
39	938292		1	Screen	
40	908545	B	1	Seal list	
41	935293		1	List	
42	938659		1	List	
43	937389		1	Screen	
44	908499	F	1	Rubber list	
45	935271		12	Washer, Flexible rubber	
46	935272		12	Washer, Black	
47	935295		1	Screen holder	
49	935296		2	Washer	
50	935297		1	Bracket	
51	935298		2	Bracket	
52	935299		1	Bolt	
53	935300		1	Shaft	
54	935301		2	Lock	

A) L=1100 mm
B) L=1400 mm
C) L=1900 mm
D) L=2100 mm
E) L=2700 mm
F) L=3300 mm

DynapacParts.com
800-889-0661
DynapacParts.com
800-889-0661

Cab Screens

18431

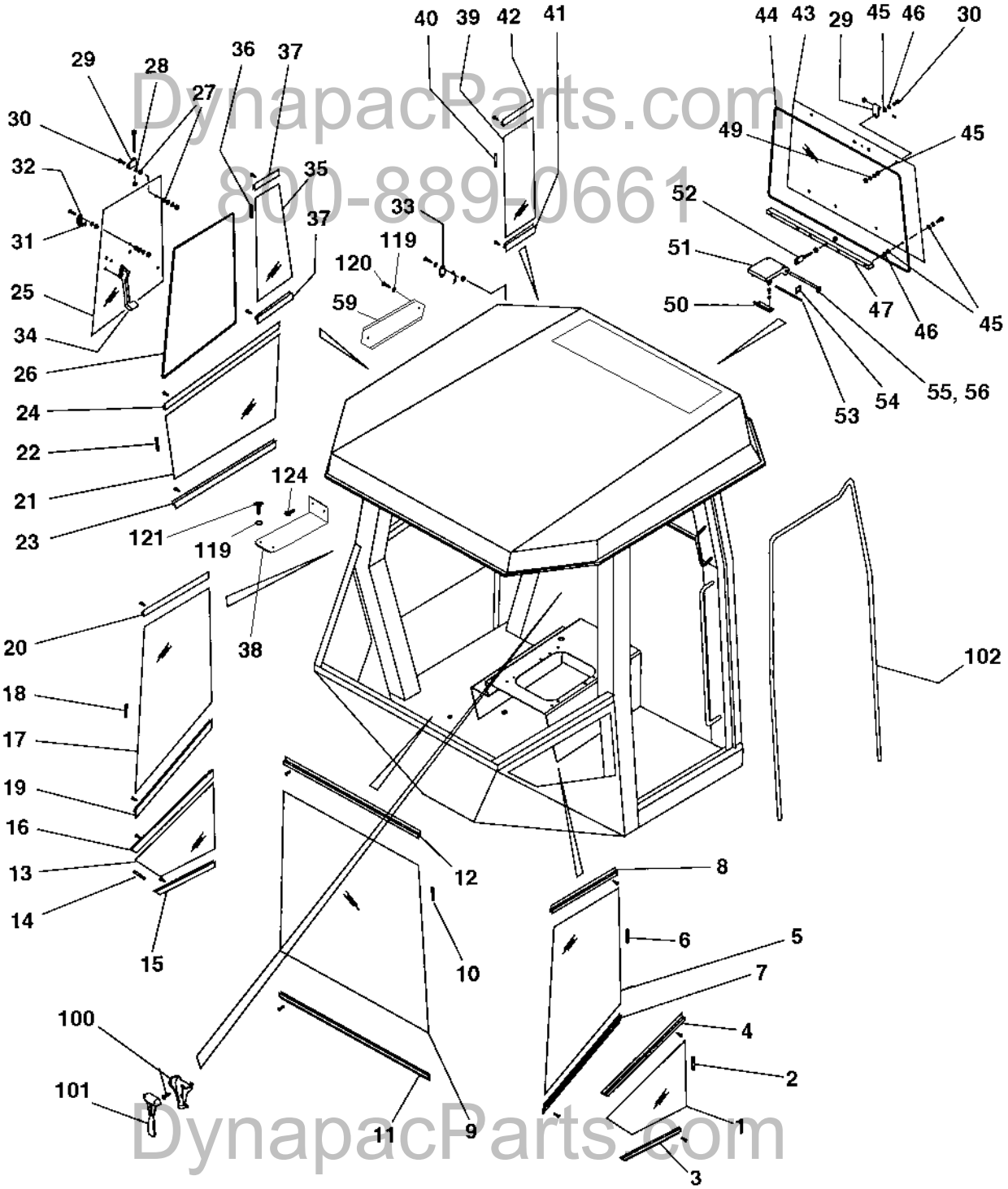

DynapacParts.com
800-889-0661
DynapacParts.com
800-889-0661

Cab Screens

Ref. No.	Part No.	Rem.	Qty	Description	Code
55	935302		1	Rod	
56	935303		1	Ring	
59	379236		1	Cover	
100	908506		1	Holder	
101	908507		1	Emergency hammer	
102	908499	G	1	Rubber list	
119	904229		16	Washer	
120	500019		14	Screw	
121	500053		2	Screw	
124	903782		2	Screw	M5x12

G) L=5 m

DynapacParts.com
800-889-0661

DynapacParts.com
800-889-0661

Cab Door, left side

16967-1

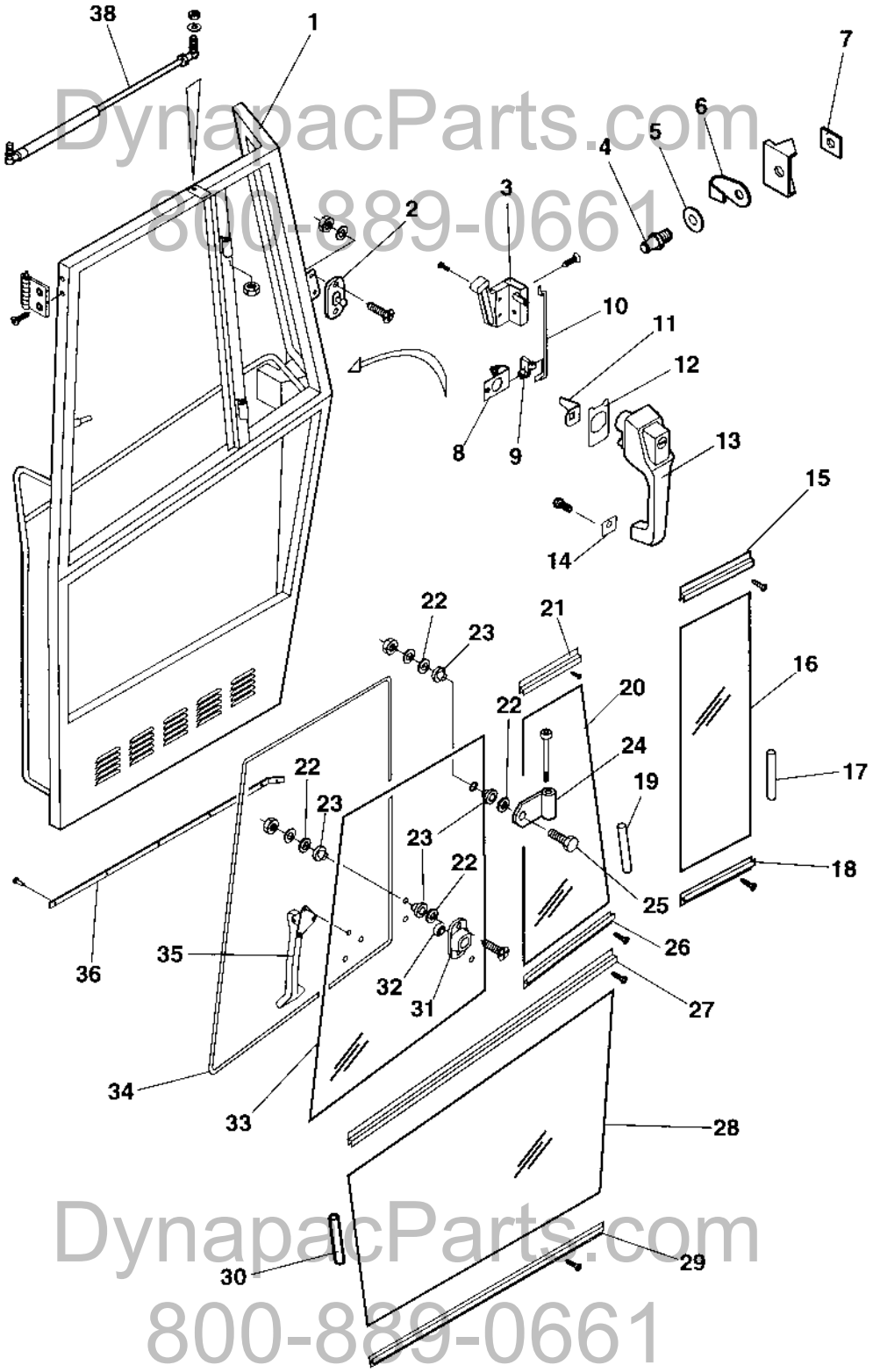

DynapacParts.com
800-889-0661
DynapacParts.com
800-889-0661

Cab Door, left side

Ref. No.	Part No.	Rem.	Qty	Description	Code
	940678		1	Door, cpl	
1	390927		1	.Door frame	
2	935277		1	.Lock pin	
3	938017		1	.Lock	
4	908580		1	.Lock pin	
5	908581		1	.Washer	
6	908582		1	.Cover	
7	908583		1	.Bracket	
8	935248		1	.Turning mechanism	
9	935249		1	.Retainer	
10	935250		1	.Rod	
11	935247		1	.Leader	
12	935246		1	.Seal	
13	935244		1	.Door handle with key	
14	935245		1	.Seal	
15	935268		1	.List	
16	937391		1	.Screen	
17	908545	A	1	.Seal list	
18	935267		1	.List	
19	908545	A	1	.Seal list	
20	937392		1	.Screen	
21	935270		1	.List	
22	935272		8	.Washer, Black	
23	935271		8	.Washer, Flexible rubber	
24	935273		2	.Hinge	
25	935274		2	.Screw	
26	935269		1	.List	
27	935266		1	.List	
28	937390		1	.Screen	
29	935265		1	.List	
30	908545	B	1	.Seal list	
31	935276		1	.Bracket	
32	935275		1	.Rubber washer	
33	937393		1	.Screen	
34	908499	C	1	.Rubber list	
35	935253		1	.Lock	
36	938101		XL	.Brush profile	
38	938018		1	.Gas spring	

A) L=1400 mm
B) L=1100 mm
C) L=2700 mm

DynapacParts.com
800-889-0661

DynapacParts.com
800-889-0661

DynapacParts.com
800-889-0661

DynapacParts.com
800-889-0661

Decals

Ref. No.	Part No.	Rem.	Qty	Description	Code
10				Decals (Page 292)	
20				Decals (Page 294)	

DynapacParts.com
800-889-0661

DynapacParts.com
800-889-0661

Decals

17018-3

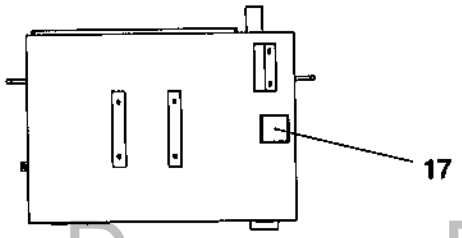

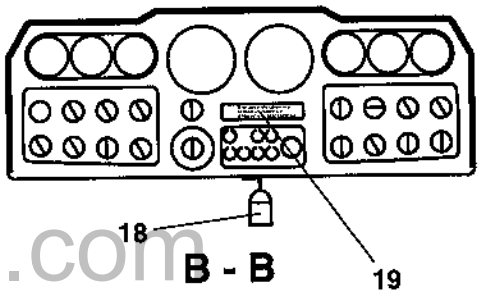

DynapacParts.com
800-889-0661

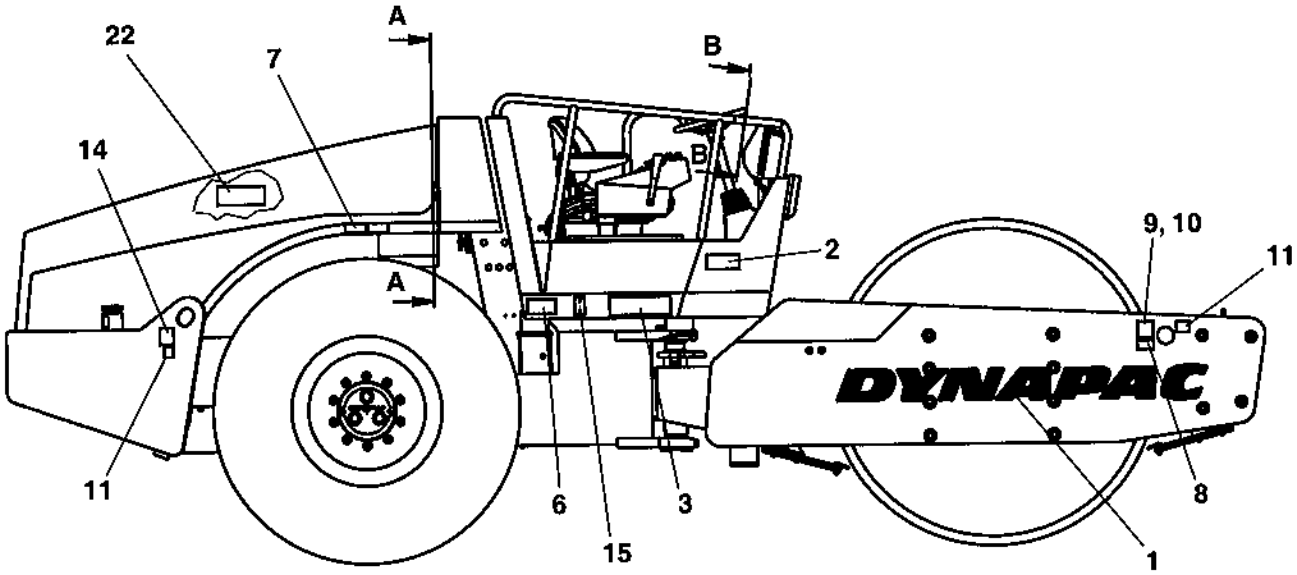

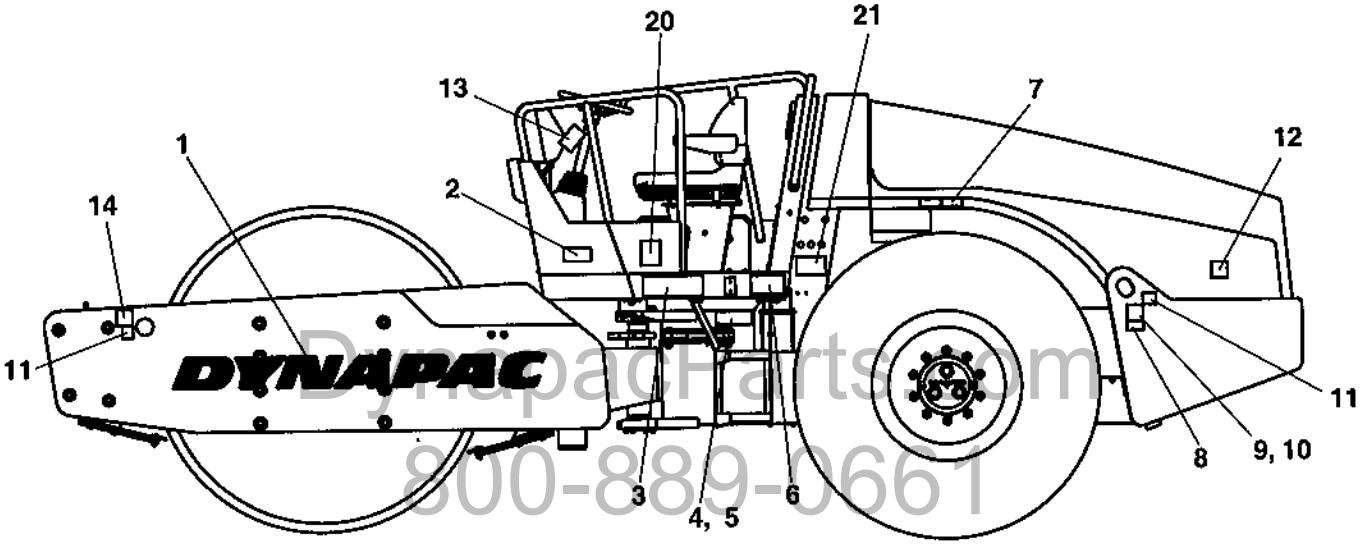

DynapacParts.com
800-889-0661

Decals

Ref. No.	Part No.	Rem.	Qty	Description		Code
1	904068		2	Decal "DYNAPAC"	L=1770 mm	
2	903422		2	Decal "SAFETY"		
3	904237		2	Decal "MODEL CODE"		
4		E	1	Product identification plate		
		A,E	1	Product identification plate CE		
5	624005		4	Blind rivet	3,2x6,1	
6	903459		2	Decal "SAFETY"		
7	349220		2	Decal "TYRE PRESSURE"		
8	908229		2	Safety decal		
9	904870		2	Lifting sign		
10	624016		8	Blind rivet		
11	382751		4	Decal "TIE DOWN POINT"		
12	904835		1	Decal "BATTERY POWER"		
13	384160		1	Loading/Unloading instruction		
14	588176		2	Decal "LIFT POINT"		
15	377744		2	Reflector, yellow		B
17	272373		1	Decal "HYDRAULIC OIL"		
18	358881		1	Pad lock		
19	349248SE		1	Decal "WARNING"	Swedish	
	349248EN		1	Decal "WARNING"	English	
	349248DE		1	Decal "WARNING"	German	
	349248IT		1	Decal "WARNING"	Italian	
	349248ES		1	Decal "WARNING"	Spanish	
	349248FR		1	Decal "WARNING"	French	
	349248NO		1	Decal "WARNING"	Norwegian	
	349248DK		1	Decal "WARNING"	Danish	
	349248FI		1	Decal "WARNING"	Finnish	
	349248PT		1	Decal "WARNING"	Portuguese	
	349248NL		1	Decal "WARNING"	Dutch	
	349248GR		1	Decal "WARNING"	Greek	
	349248IS		1	Decal "WARNING"	Icelandic	
	349248CN		1	Decal "WARNING"	Chinese	
20	791276		1	Decal "Sound power level"	106dB	
	791278		1	Decal "Sound power level"	108dB	
	791275		1	Decal "Sound power level"	105dB	
	791277		1	Decal "Sound power level"	107dB	
21	791094		1	Decal "RUS 127 approved"	Option	
22	791642		1	Decal "WARNING"	Use of starting fluid prohib.	

A) With CE-Mark
E) Not available as sparepart

DynapacParts.com
800-889-0661

DynapacParts.com
800-889-0661

Decals

17017-1

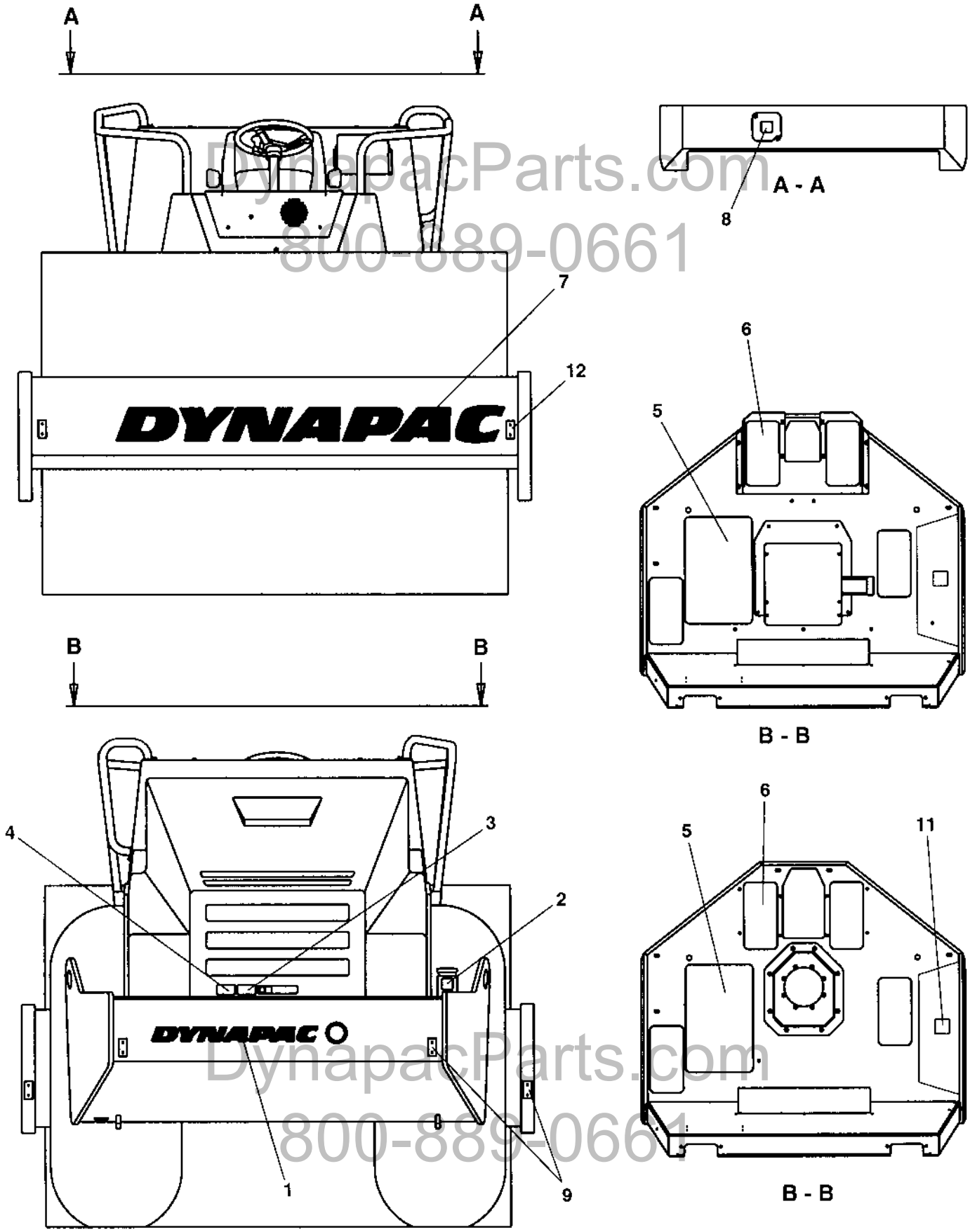

DynapacParts.com
800-889-0661
DynapacParts.com
800-889-0661

Decals

Ref. No.	Part No.	Rem.	Qty	Description		Code
1	904069		1	Decal "DYNAPAC"	L=760 mm	
2	991658		1	Decal "FUEL"		
3	903423		1	Decal "SAFETY"		
4	903424		1	Decal "HOT SURFACE"		
5	373364		1	Slip protection		
6	373363		4	Slip protection		
7	904068		1	Decal "DYNAPAC"	L=1770 mm	
8	272372		1	Decal "HYDRAULIC OIL"		
	904601		1	Decal "BIO HYDRAULIC OIL"		
9	377742		4	Reflector, red		B
11	903425		1	Decal "SAFETY MANUAL"		
12	377743		2	Reflector, white		B

DynapacParts.com
800-889-0661

DynapacParts.com
800-889-0661

DynapacParts.com
800-889-0661

DynapacParts.com
800-889-0661

Standard equipment

Ref. No.	Part No.	Rem.	Qty	Description	Code
100				Standard equipment (Page 298)	

DynapacParts.com
800-889-0661

DynapacParts.com
800-889-0661

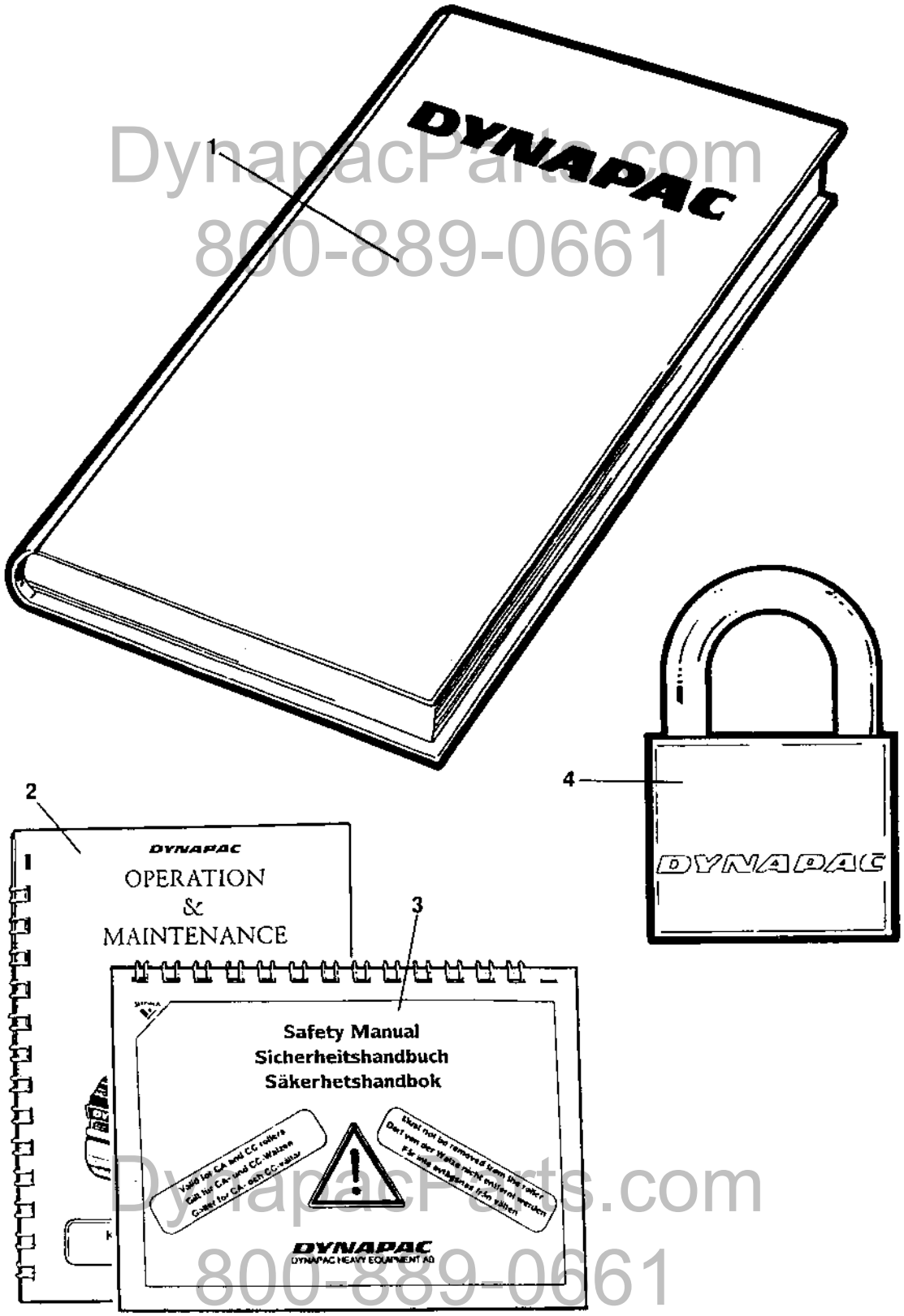

DynapacParts.com
800-889-0661
DynapacParts.com
800-889-0661

Standard equipment

Ref. No.	Part No.	Rem.	Qty	Description	Code
1			1	Documentation	OMS252
			1	.Warranty registration card	
			1	.Operation instruction	O252
			1	.Maintenance instruction	M252
			1	.Spare parts catalogue	SCA302
			1	.Instruction manual	Deutz BF4M2012C
2			1	.Operation / maintenance instruction	OM252
3			1	.Safety manual	RSAFE
4	358881		1	Pad lock	

DynapacParts.com
800-889-0661

DynapacParts.com
800-889-0661

DynapacParts.com
800-889-0661

DynapacParts.com
800-889-0661

Optional equipment

Ref. No.	Part No.	Rem.	Qty	Description	Code
10				Tool equipment (Page 302)	
20				SMV-sign, First aid box (Page 304)	
30				Canopy (Page 306)	
40				Levelling blade, metal parts (Page 308)	
50				Levelling blade, hydraulic parts (Page 310)	
60				Levelling blade control (Page 312)	
80				Air conditioner assembly (Page 314)	
90				Condensor assembly (Page 316)	
100				Compressor assembly (Page 318)	
110				Evaporator assembly (Page 320)	
120				Anti-spin CA Up to ECN04171 (Page 322)	
125				Anti-spin CA From ECN04171 (Page 324)	
130				Anti spin, Potentiometer installation (Page 326)	
140				Anti spin, Hydraulic (Page 328)	
150				Roof hatch (Page 330)	
170				Fire extinguisher assembly (Page 332)	
190				Heater, Simple cab (Page 334)	Option
200				PD-Scrapers, Special Field kit (Page 338)	

DynapacParts.com
800-889-0661

DynapacParts.com
800-889-0661

Tool equipment

17111-1

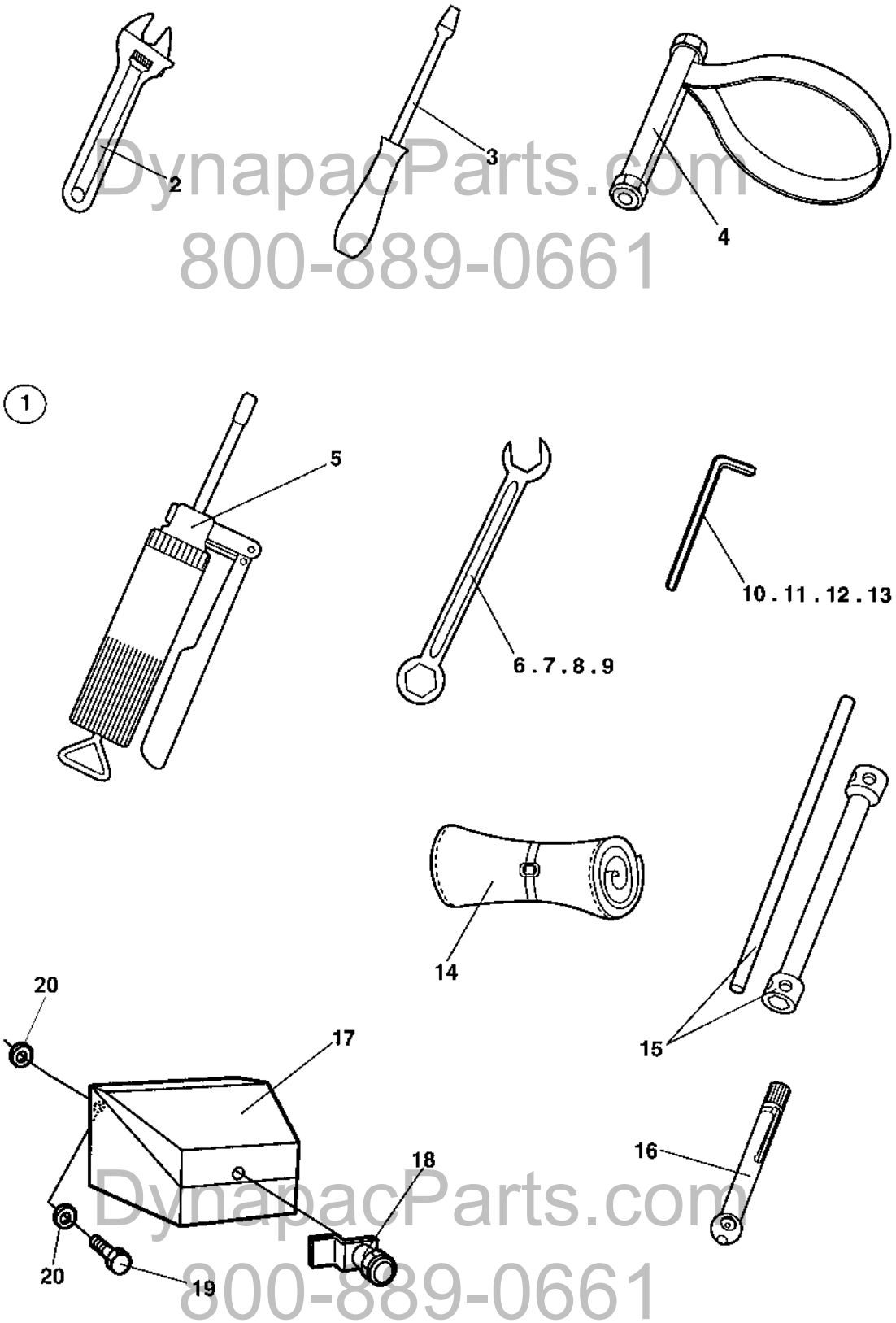

DynapacParts.com
800-889-0661
DynapacParts.com
800-889-0661

Tool equipment

Ref. No.	Part No.	Rem.	Qty	Description		Code
1	355890		1	Tool set Cpl		
2			1	.Adjustable wrench		
3			1	.Screw driver		
4	902610		1	.Belt pliers		
5	311016		1	.Grease gun		
6			1	.Open end spanner	10mm	
7			1	.Open end spanner	13mm	
8			1	.Open end spanner	16mm	
9			1	.Open end spanner	18mm	
10			1	.Allen wrench	10mm	
11			1	.Allen wrench	12mm	
12			1	.Allen wrench	6mm	
13			1	.Allen wrench	8mm	
14			1	.Tool bag		
15			1	.Wheel nut key	30/32mm	
16	901220		1	.Pressure gauge		
17	372837		1	Tool box		
18	372658		1	.Lock		
19	500021		3	Screw		
20	904640		6	Washer		

DynapacParts.com
800-889-0661

DynapacParts.com
800-889-0661

SMV-sign, First aid box

17113

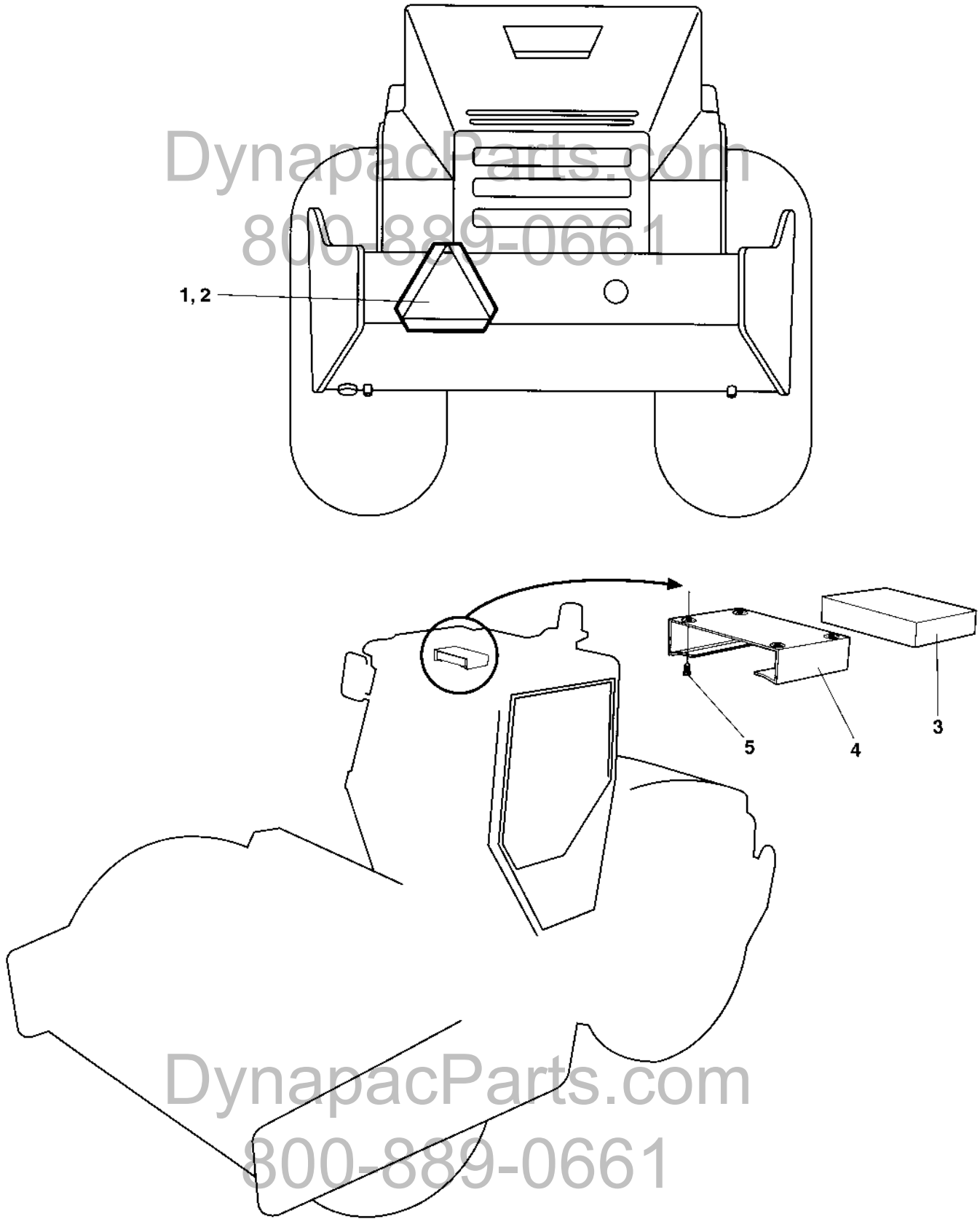

DynapacParts.com
800-889-0661
DynapacParts.com
800-889-0661

SMV-sign, First aid box

Ref. No.	Part No.	Rem.	Qty	Description		Code
1	476019		1	SMV sign		D
2	624005		6	Blind rivet	3,2x6,1	
3	902508		1	First aid kit		
4	371837		1	Holder		
5	903969		4	Screw	ST4,8x19 Black	

DynapacParts.com
800-889-0661

DynapacParts.com
800-889-0661

Canopy

17121

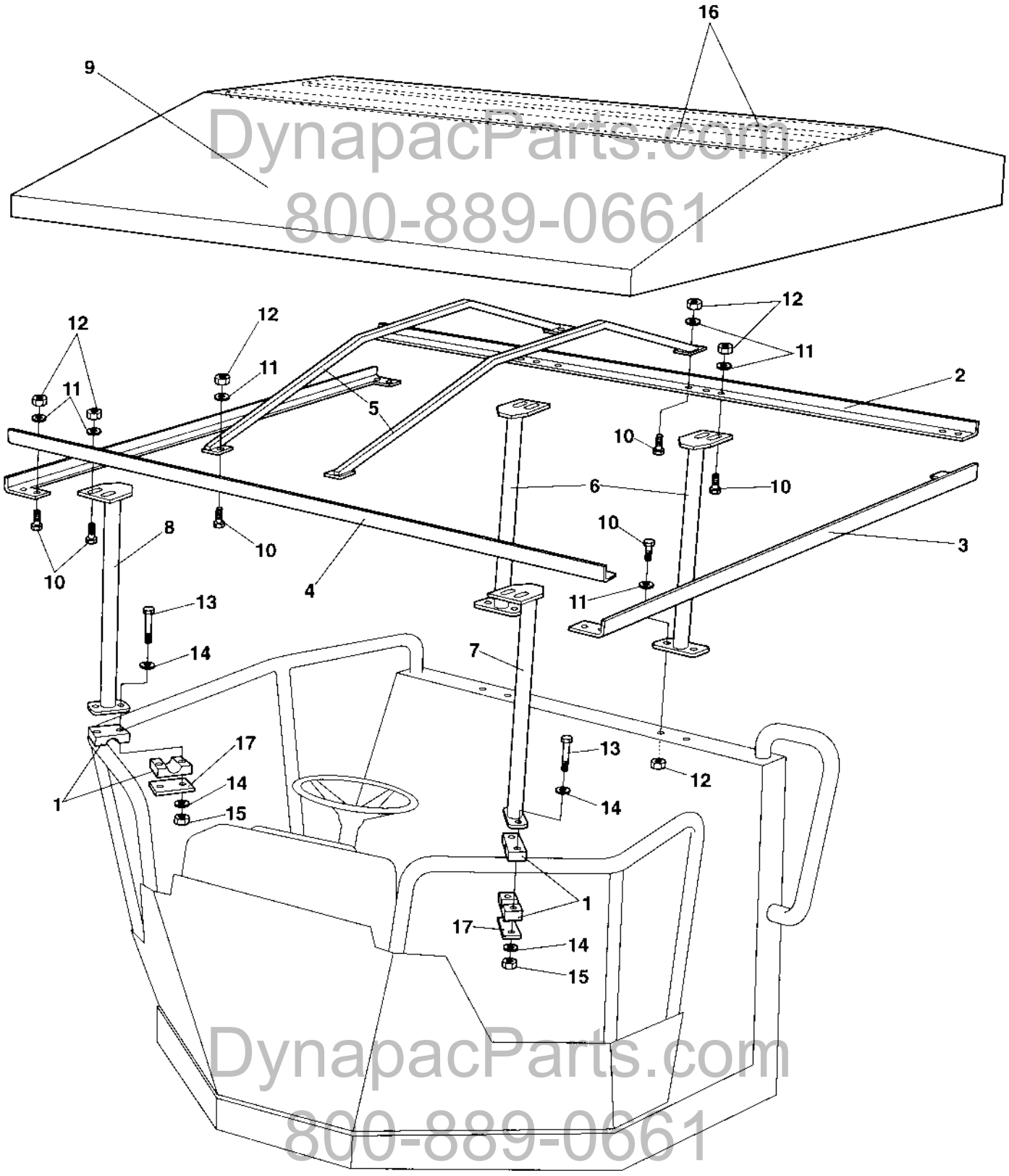

Canopy

Ref. No.	Part No.	Rem.	Qty	Description	Code
1	904340		2	Pipe clamp	
2	373746		1	Canopy profile	
3	373747		2	Canopy profile	
4	373748		1	Canopy profile	
5	373749		4	Canopy rib	
6	373750		2	Canopy anchor	
7	373752		1	Canopy anchor	
8	373756		1	Canopy anchor	
9	373906		1	Roof	
10	500021		24	Screw	
11	904229		44	Washer	
12	586003		20	Lock nut	
13	500153		4	Screw	
14	904228		8	Washer	
15	586002		4	Lock nut	
16	373907		2	Lath	
17	924791		2	Cover plate	

DynapacParts.com
800-889-0661

DynapacParts.com
800-889-0661

Levelling blade, metal parts

17132-1

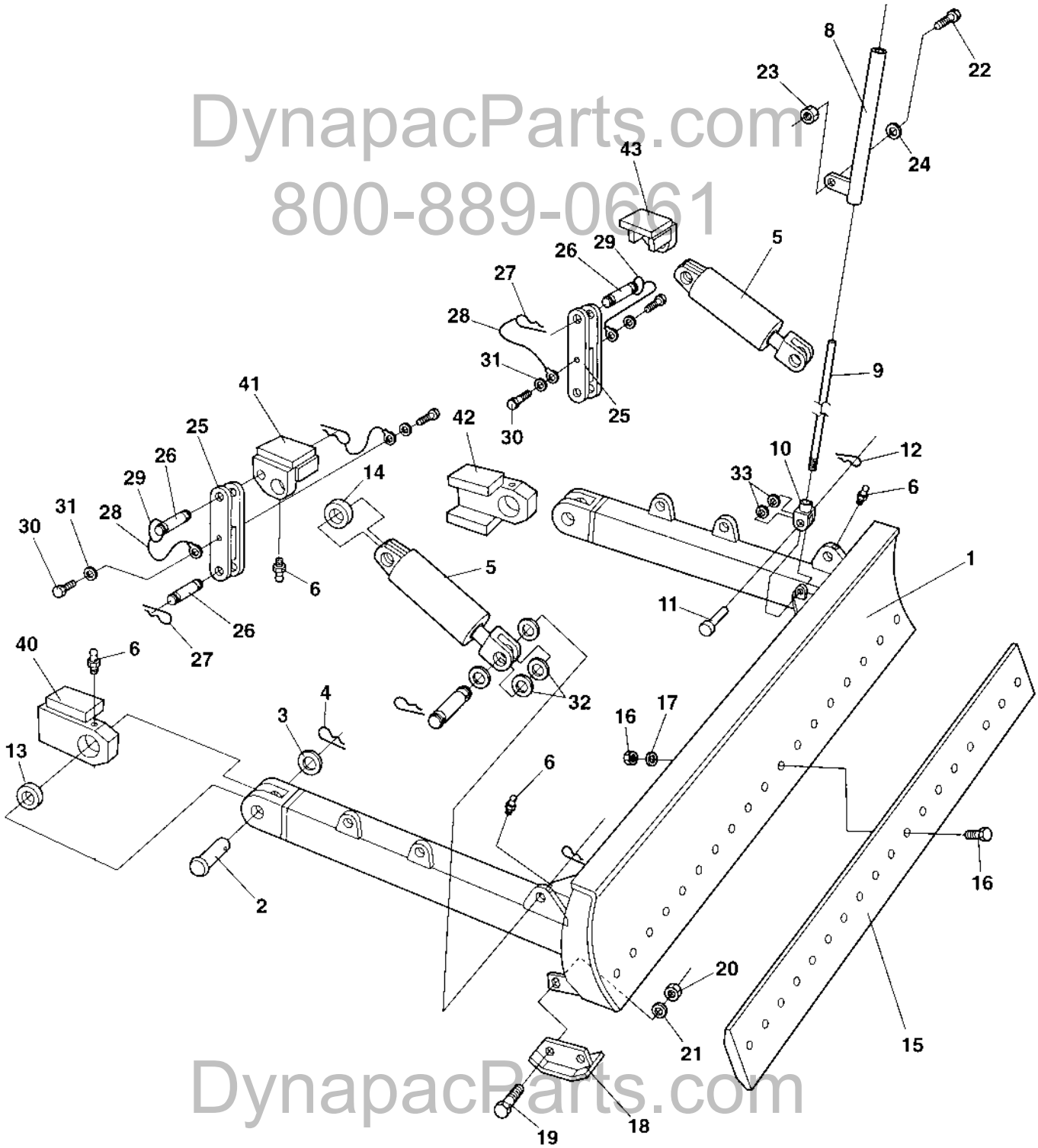

DynapacParts.com
800-889-0661
DynapacParts.com
800-889-0661

Levelling blade, metal parts

Ref. No.	Part No.	Rem.	Qty	Description		Code
1	374306		1	Levelling blade		
2	346214		2	Clevis pin		
3	600019		2	Washer		
4	630020		2	Pin		
5	375031		2	Steering cylinder Up to 68X10966 (Page 130)		C
	392002		2	Steering cylinder From 68X10967 (Page 128)		C
6	926214		6	Grease fitting		D
8	346215		1	Indicating pipe		
9	346216		1	Indicator		
10	415193		1	Yoke		
11	550038		1	Clevis pin		
12	630008		1	Pin		D
13	100071		2	Radial spherical plain bearing		D
14	813316		4	Ball bushing		D
15	801259		1	Blade		B
16	801251		19	Screw with nut		
17	904233		19	Washer		
18	346217		2	Shoe		B
19	500195		4	Screw		
20	902288		4	Nut	M12	
21	904213		4	Washer		
22	500194		1	Screw		
23	586019		1	Lock nut		
24	904231		1	Washer		
25	372938		2	Safety rod		
26	347119		4	Shaft		D
27	635061		6	Hair clip		D
28	343775		4	Wire		
29	357488		2	Spring		
30	500191		4	Screw	M10x14	
31	904230		4	Washer		
32	600016		8	Washer	26x45x4	
33	904231		2	Washer		
40	387953		1	Bracket		
41	387954		1	Cylinder bracket		
42	387952		1	Bracket		
43	387955		1	Cylinder bracket		

DynapacParts.com
800-889-0661

DynapacParts.com
800-889-0661

Levelling blade, hydraulic parts

18160

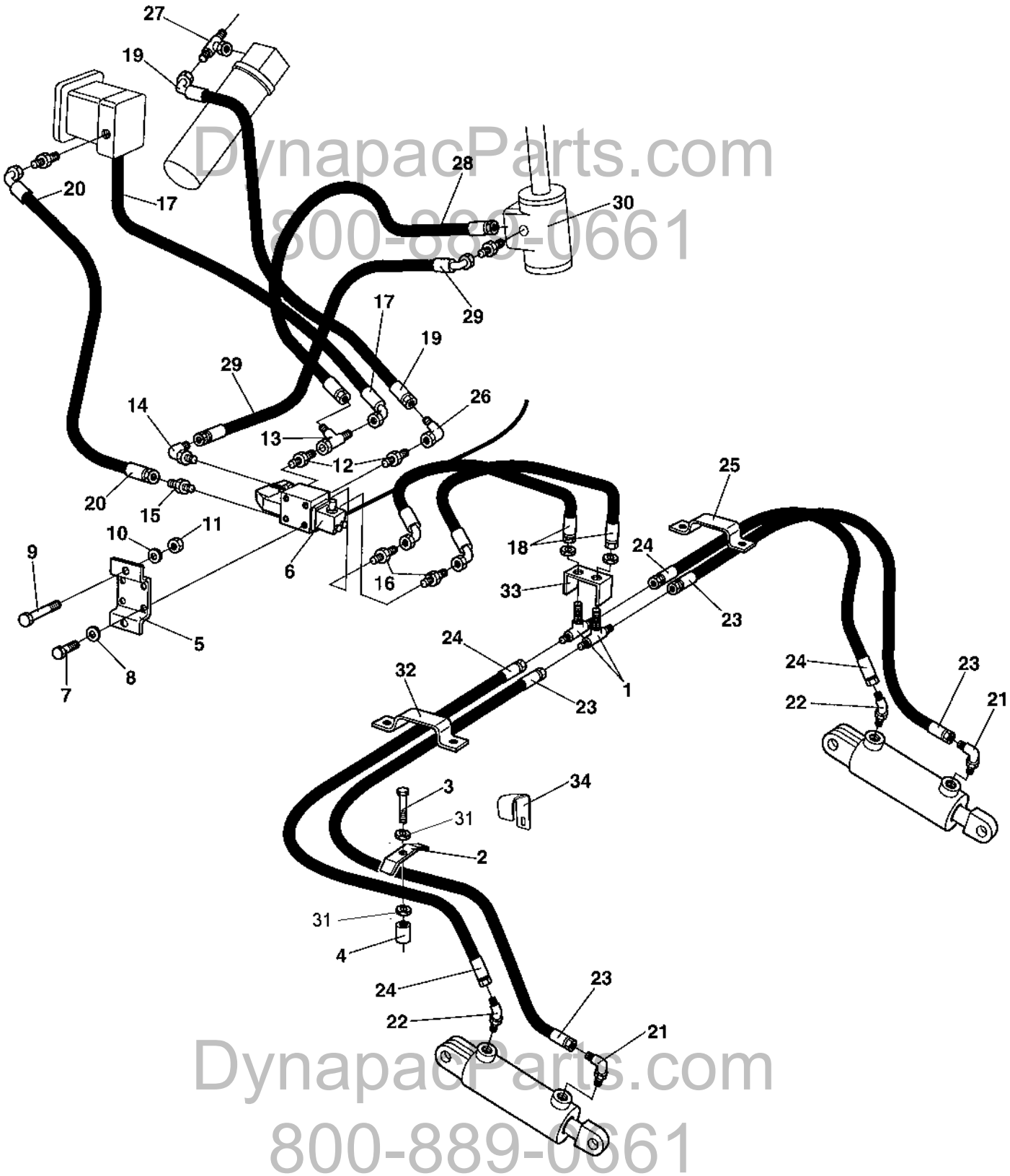

DynapacParts.com
800-889-0661
DynapacParts.com
800-889-0661

Levelling blade, hydraulic parts

Ref. No.	Part No.	Rem.	Qty	Description	Code
1	801199		2	Adapter	
2	346230		4	Clamp	
3	500022		4	Screw	
4	356273		4	Spacer sleeve	
5	374813		1	Bracket	
6	375000		1	Hydraulic valve	
7	500019		4	Screw	
8	904229		4	Washer	
9	500033		2	Screw M10-1,5x60 8,8	
10	904230		2	Washer	
11	902287		2	Nut	
12	334190		2	Connector	
13	334135		1	Tee-connector	
14	234481		1	Connector	
15	234219		1	Connector	
16	334116		2	Straight o-ring connector	
17	482243		1	Hydraulic hose	
18	482525		2	Hydraulic hose	
19	482828		1	Hydraulic hose	
20	483087		1	Hydraulic hose	
21	813444		2	Elbow 90, O-ring	
22	813500		2	Elbow 45, O-ring	
23	483250		2	Hydraulic hose	
24	483251		2	Hydraulic hose	
25	373015		1	Clamp	
26	334197		1	Elbow 90	
27	234953		1	Tee-connector	
28	483618	A	1	Hydraulic hose	
	483510	B	1	Hydraulic hose	
29	482588	A	1	Hydraulic hose	
	482728	B	1	Hydraulic hose	
30	376109		1	Pilot valve	
31	904229		8	Washer	
32	373016		1	Hose clamp	
33	374817		1	Holder	
34	377582		2	Holder	

A) Used on the standard platform model.
B) Used on the drivers seat-turnover model.

DynapacParts.com
800-889-0661

DynapacParts.com
800-889-0661

Levelling blade control

17134

DynapacParts.com
800-889-0661

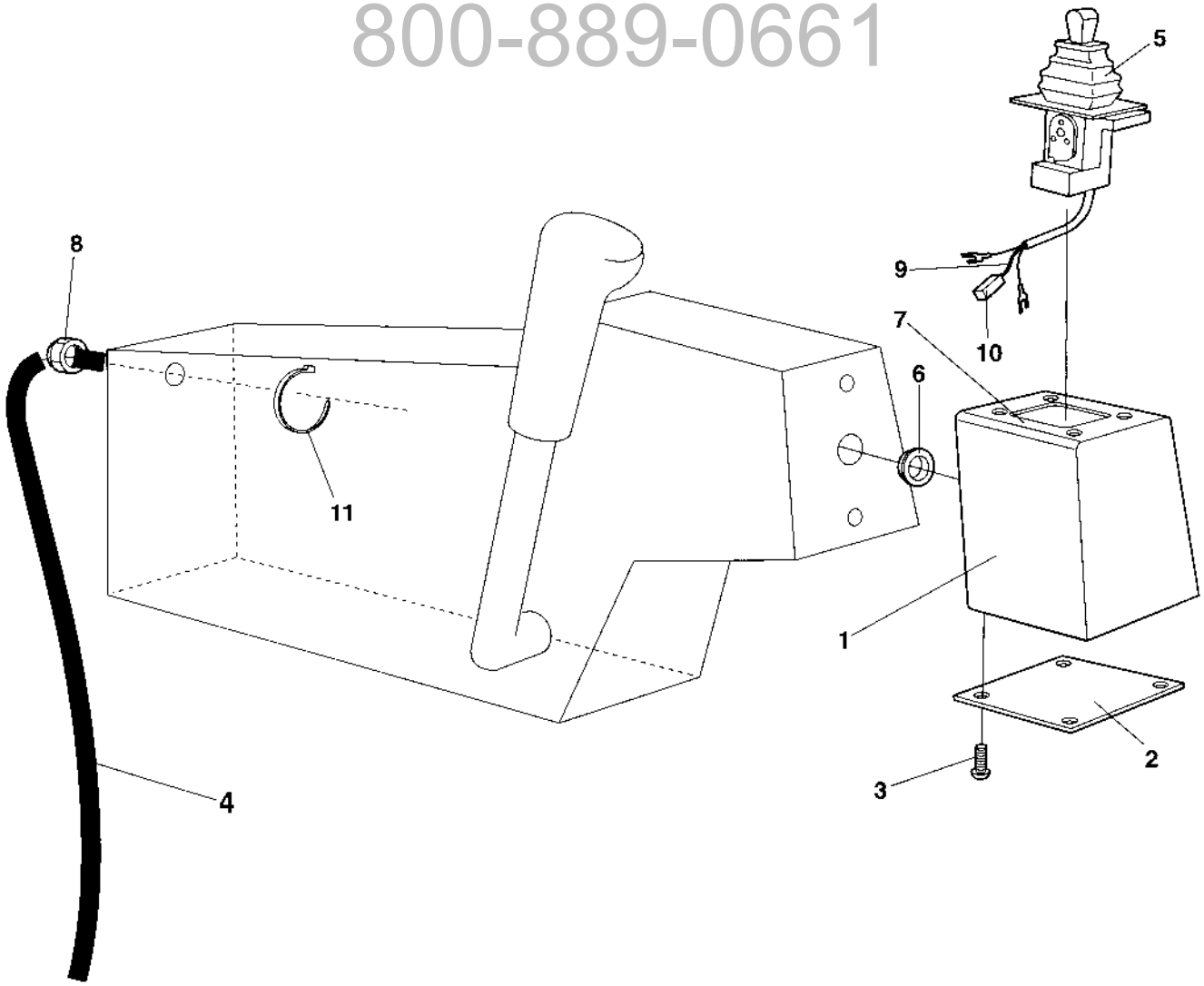

DynapacParts.com
800-889-0661

Levelling blade control

Ref. No.	Part No.	Rem.	Qty	Description		Code
1	374816		1	Cover		
2	375105		1	Cover plate		
3	903658		10	Screw	M5x10	
4	374842		1	Cable harness		
5	375205		1	Control		
	904865		1	.Rubber bellows		
	938207		1	.Knob		
6	909152		1	Rubber grommet		
7	374838		1	Decal		
8	904302		1	Lock nut		
9	343552		1	Connection wire		
10	930154		1	Contact piece, NC		
11	313068		5	Cable ties	L=92 mm	

DynapacParts.com
800-889-0661

DynapacParts.com
800-889-0661

Air conditioner assembly

17674

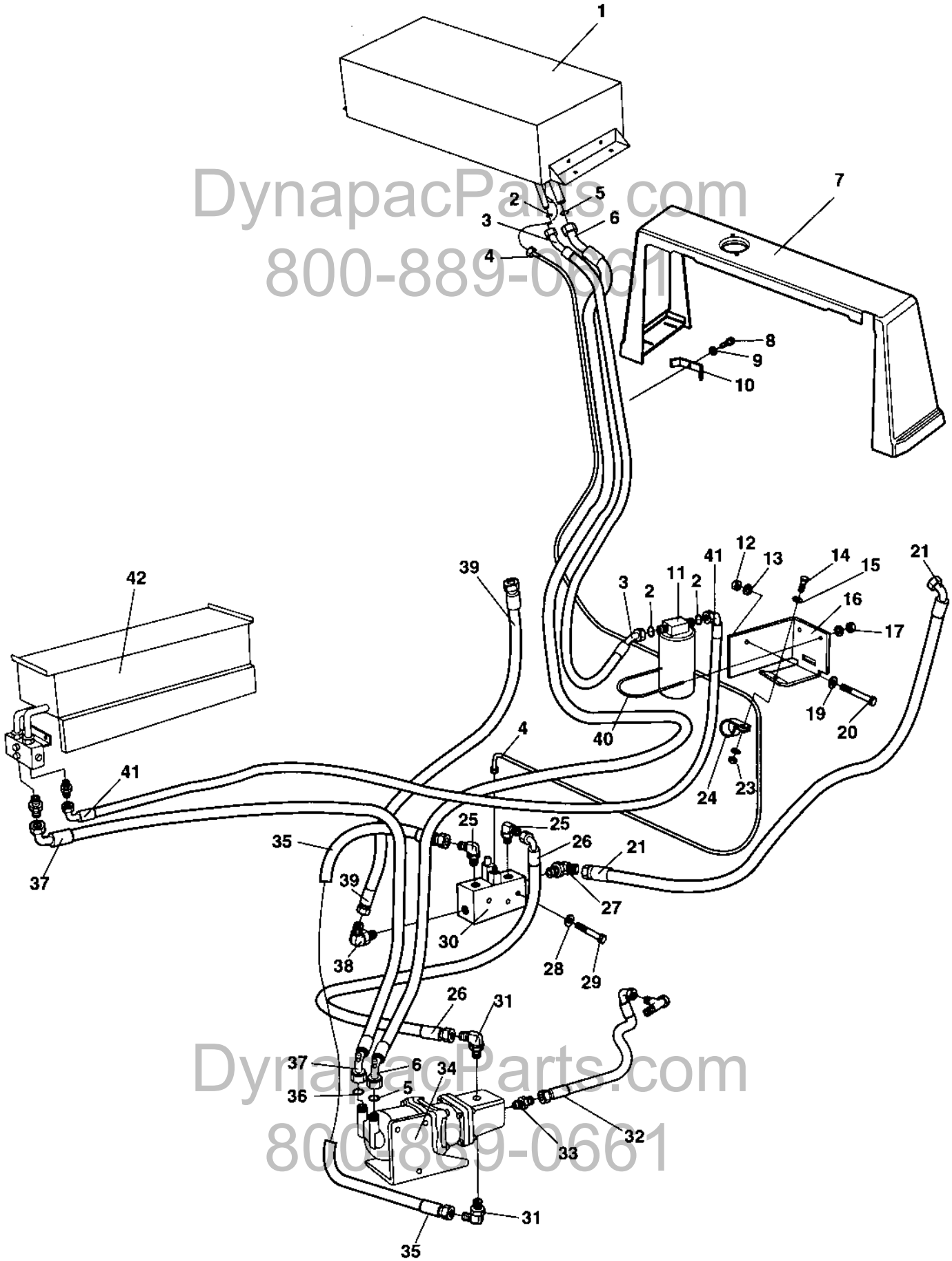

DynapacParts.com
800-889-0661

Air conditioner assembly

Ref. No.	Part No.	Rem.	Qty	Description	Code
1	383413		1	Condenser, cpl	
2	384877		4	O-ring	
3	384876		1	Hose	
4	384190		1	Cable harness	
5	384878		4	O-ring	
6	384874		1	Hose	
7	385152		1	Protecting cover	
8	500023		3	Screw	M8-1,25x40 8,8
9	904229		3	Washer	
10	346230		3	Clamp	
11	383424		1	Drying filter	
12	570006		1	Nut	
13	904567		1	Washer	10,5x28x6 HB305
14	500013		1	Screw	
15	904228		4	Washer	
16	383409		1	Holder	
	904165		1	Safety decal	Toxic gases
17	586003		2	Lock nut	
19	904230		1	Washer	
20	500192		1	Screw	M10x80
21	483480		1	Hydraulic hose	
23	570004		1	Nut	M6
24	921056		2	Clamp	
25	334604		3	Elbow 90, O-ring	
26	483548		1	Hydraulic hose	
27	234131		1	Elbow 45, O-ring	
28	904229		2	Washer	
29	500239		2	Screw	M8-1.25x50
30	370720	A	1	Direction control valve	
	379204	B	1	Direction control valve	
31	234990		2	Elbow 90	
32	482328		1	Hydraulic hose	
33	234659		1	Straight o-ring connector	
34			1	Compressor assembly (Page 318)	
35	483548		1	Hydraulic hose	
36	384879		2	O-ring	
37	384873		1	Hose	
38	334135		1	Tee-connector	
39	381011727		1	Hydraulic hose	
40	313093		1	Pipe clamp	
41	384875		1	Hose	
42			1	Evaporator assembly (Page 320)	

A) Replaced by P/N 379204.
B) Replaces P/N 370720.

DynapacParts.com
800-889-0661

DynapacParts.com
800-889-0661

Condensor assembly

17676-1

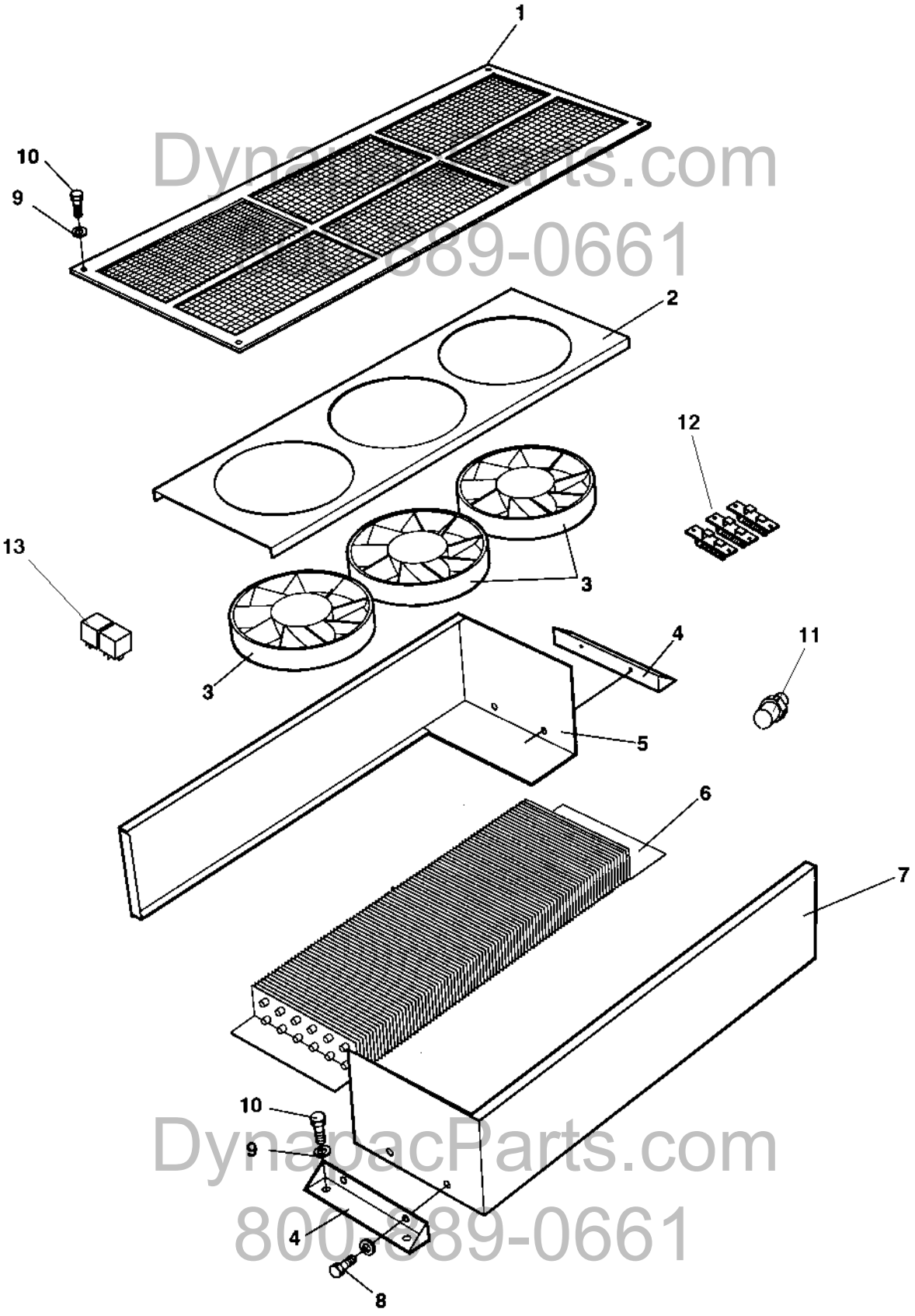

DynapacParts.com
800-889-0661
DynapacParts.com
800-889-0661

Condensor assembly

Ref. No.	Part No.	Rem.	Qty	Description	Code
1	384589		1	Cover	
2	938599		1	Fan bracket	
3	938603		3	Fan	
4	938600		2	Condensor bracket	
5	938598		1	Cover	
6	938602		1	Condensor Coil	
7	938597		1	Cover	
8	901832		4	Screw	
9	500022		6	Screw	
10	904229		6	Washer	
11	938605		1	Pressure switch	
12	938606		3	Resistor	
13	287598		2	Relay	12V-30A

DynapacParts.com
800-889-0661

DynapacParts.com
800-889-0661

Compressor assembly

17675

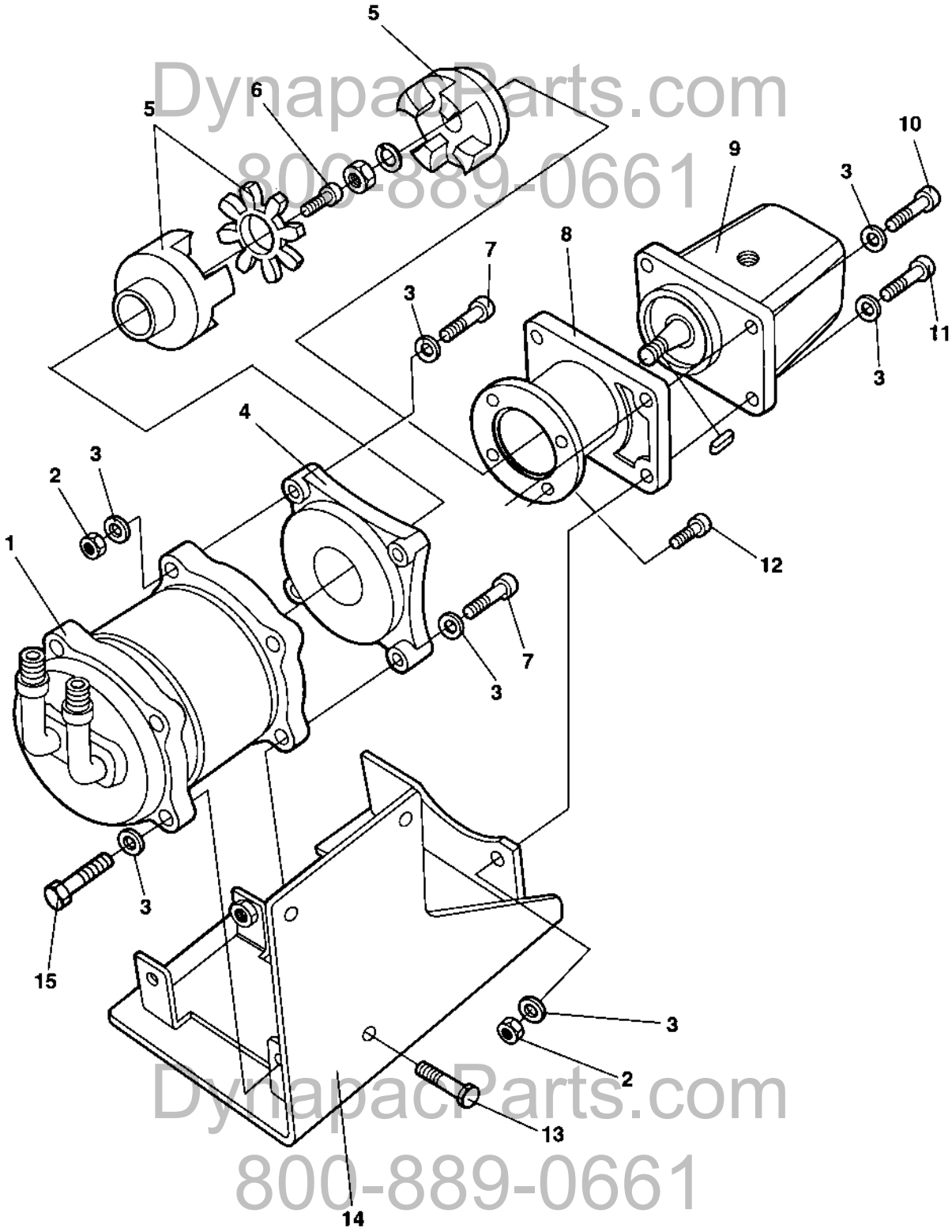

DynapacParts.com
800-889-0661
DynapacParts.com
800-889-0661

Compressor assembly

Ref. No.	Part No.	Rem.	Qty	Description	Code
1	383417		1	Compressor	
2	570005		4	Nut	
3	904229		14	Washer	
4	383419		1	Connector	
5	383422		1	Coupling	
	945505		1	.Cog wheel	
6	508001		1	Screw M6x12	
7	500026		4	Screw M8-1,25x60 8,8	
8	383418		1	Connector	
9	383420		1	Hydraulic motor	
10	508027		2	Screw	
11	508057		2	Screw	
12	508092		4	Screw	
13	500067		3	Screw	
14	383410		1	Bracket	
15	500047		2	Screw M8-1,25x35 8,8	

DynapacParts.com
800-889-0661

DynapacParts.com
800-889-0661

Evaporator assembly

17677-1

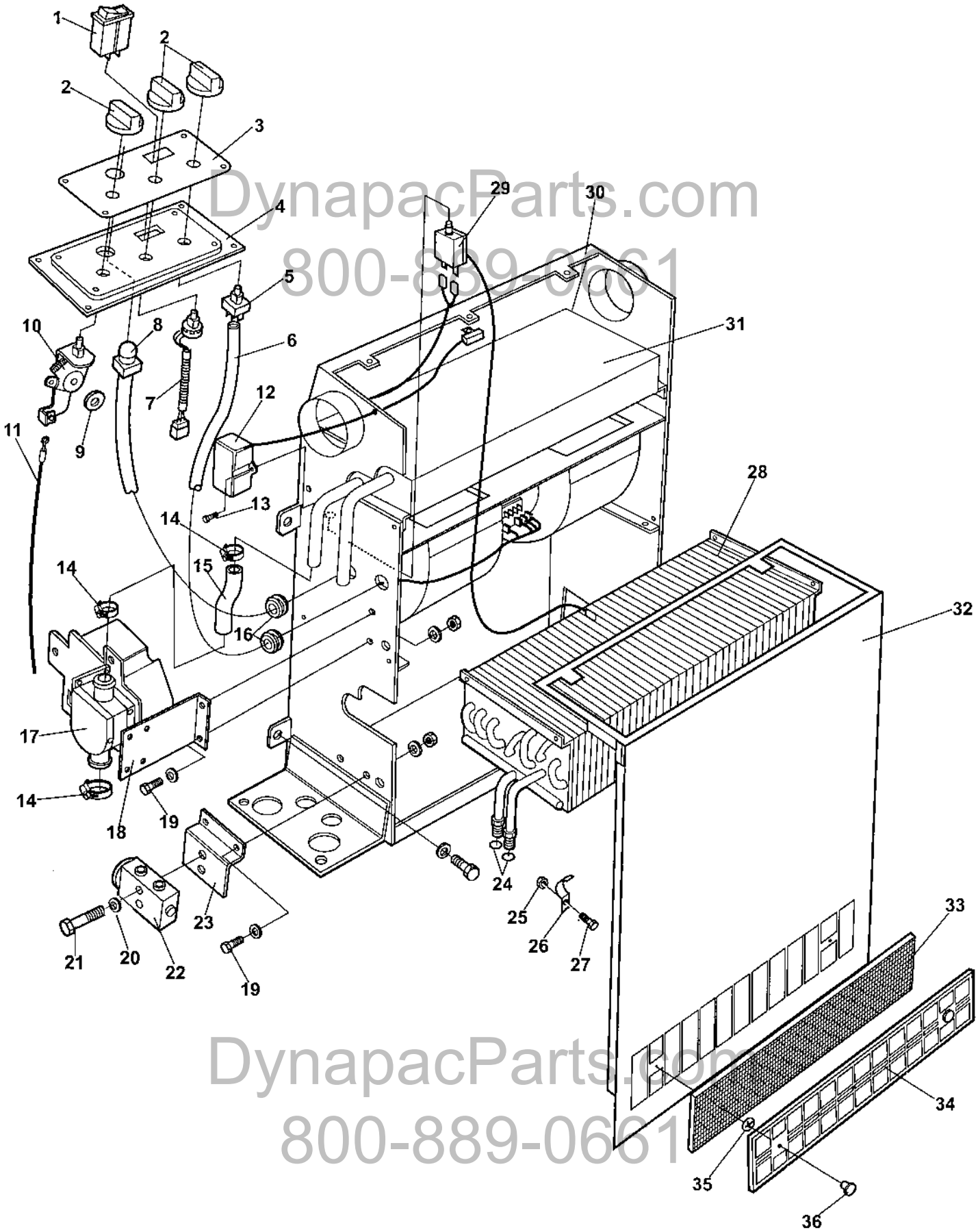

DynapacParts.com
800-889-0661
DynapacParts.com
800-889-0661

Evaporator assembly

Ref. No.	Part No.	Rem.	Qty	Description		Code
1	938619		1	Switch		
2	938620		3	Knob		
3	938618		1	Decal		
4	938617		1	Control panel		
5	938622		1	Switch		
6	938631		1	Cable harness		
7	938623		1	Potentiometer		
8	938624		1	Sensor		
9	385134		1	Lock washer		
10	938621		1	Rotary control		
11	384762		1	Wire		
12	384187		1	Ecc-Box		
13	791144		6	Screw		
14	313003		3	Hose clamp		D
15	384881		1	Hose		
16	384927		1	Grommet		
17	383425		1	Electronic valve		
18	384174		1	Holder		
19	903782		4	Screw	M5x12	
20	904228		2	Washer		
21	500061		2	Screw	M6-1X35 8,8	
22	384176		1	Valve		
23	384177		1	Holder		
24	384878		2	O-ring		
25	923976		1	Nut		
26	384880		1	Wire clamp		
27	500086		1	Screw		
28	383414		1	Evaporator		
29	384897		1	Thermostat		
30	938625		1	Casing		
31	938639		1	Heater coil		
32	938626		1	Cover		
33	384761		1	Air filter element		
34	384760		1	Filter grill		
35	939413		2	Starlock		
36	938634		2	Knob		

DynapacParts.com
800-889-0661

DynapacParts.com
800-889-0661

Anti-spin CA

17343

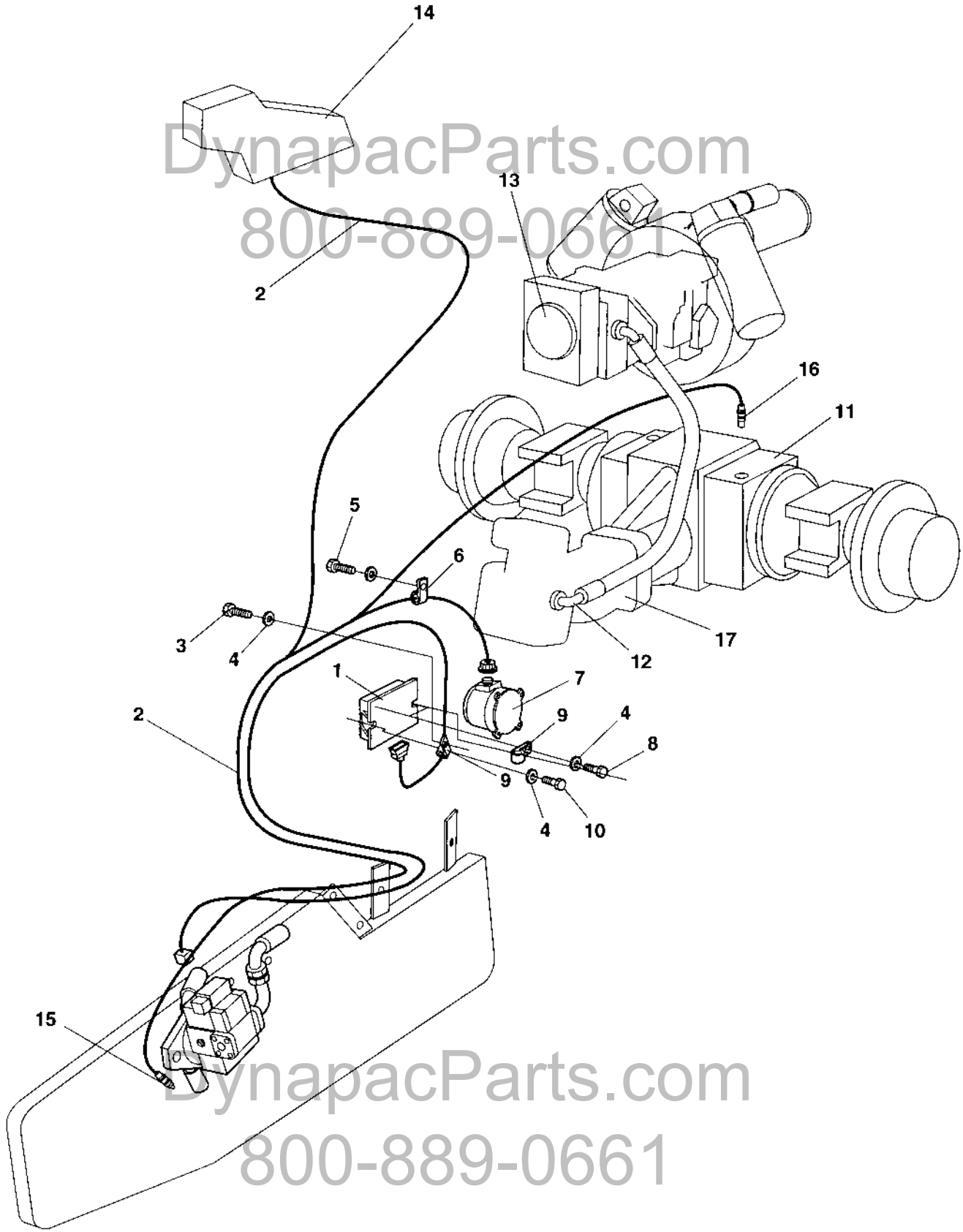

DynapacParts.com
800-889-0661
DynapacParts.com
800-889-0661

Anti-spin CA

Ref. No.	Part No.	Rem.	Qty	Description	Code
1	382098		1	Control unit	
2	382070		1	Cable harness	
3	500019		1	Screw	
4	904734		3	Washer	
5	925846		1	Screw	
6	921039		1	Pipe clamp	
7	373902		1	Sensor	
8	500022		1	Screw	
9	960727		2	Clamp	
10	500021		1	Screw	
11	383856		1	Rear axle (Page 98)	No-Spin, Option
12	483483		2	Hydraulic hose	
13	382133		1	Hydraulic pump	
14				Anti spin, Potentiometer installation (Page 326)	
15	904217		1	Sensor	
16	904216		1	Sensor	
17	382089		1	Hydraulic motor	

DynapacParts.com
800-889-0661

DynapacParts.com
800-889-0661

Anti-spin CA

17343-2

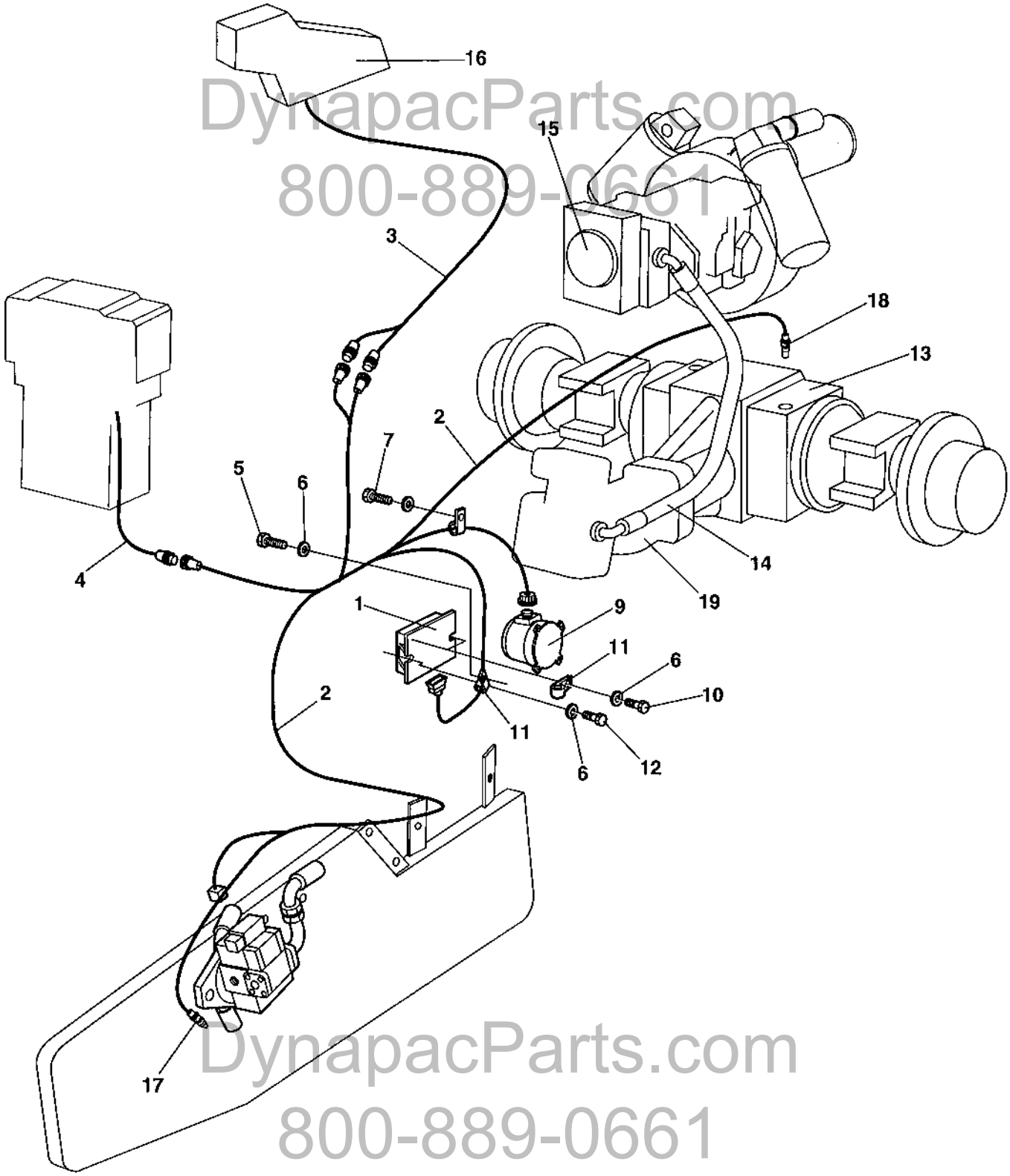

DynapacParts.com
800-889-0661
DynapacParts.com
800-889-0661

Anti-spin CA

Ref. No.	Part No.	Rem.	Qty	Description	Code
1	382098		1	Control unit	
2	378131		1	Cable harness	
3	378132		1	Cable harness	
4	378133		1	Cable harness	
5	500019		1	Screw	
6	904734		3	Washer	
7	925846		1	Screw	
8	921039		1	Pipe clamp	
9	373902		1	Sensor	
10	500022		1	Screw	
11	960727		2	Clamp	
12	500021		1	Screw	
13	383856		1	Rear axle (Page 98)	No-Spin, Option
14	483483		2	Hydraulic hose	
15	382133		1	Hydraulic pump	
16				Anti spin, Potentiometer installation (Page 326)	
17	904217		1	Sensor	
18	904216		1	Sensor	
19	382089		1	Hydraulic motor	

DynapacParts.com
800-889-0661

DynapacParts.com
800-889-0661

Anti spin, Potentiometer installation

17356

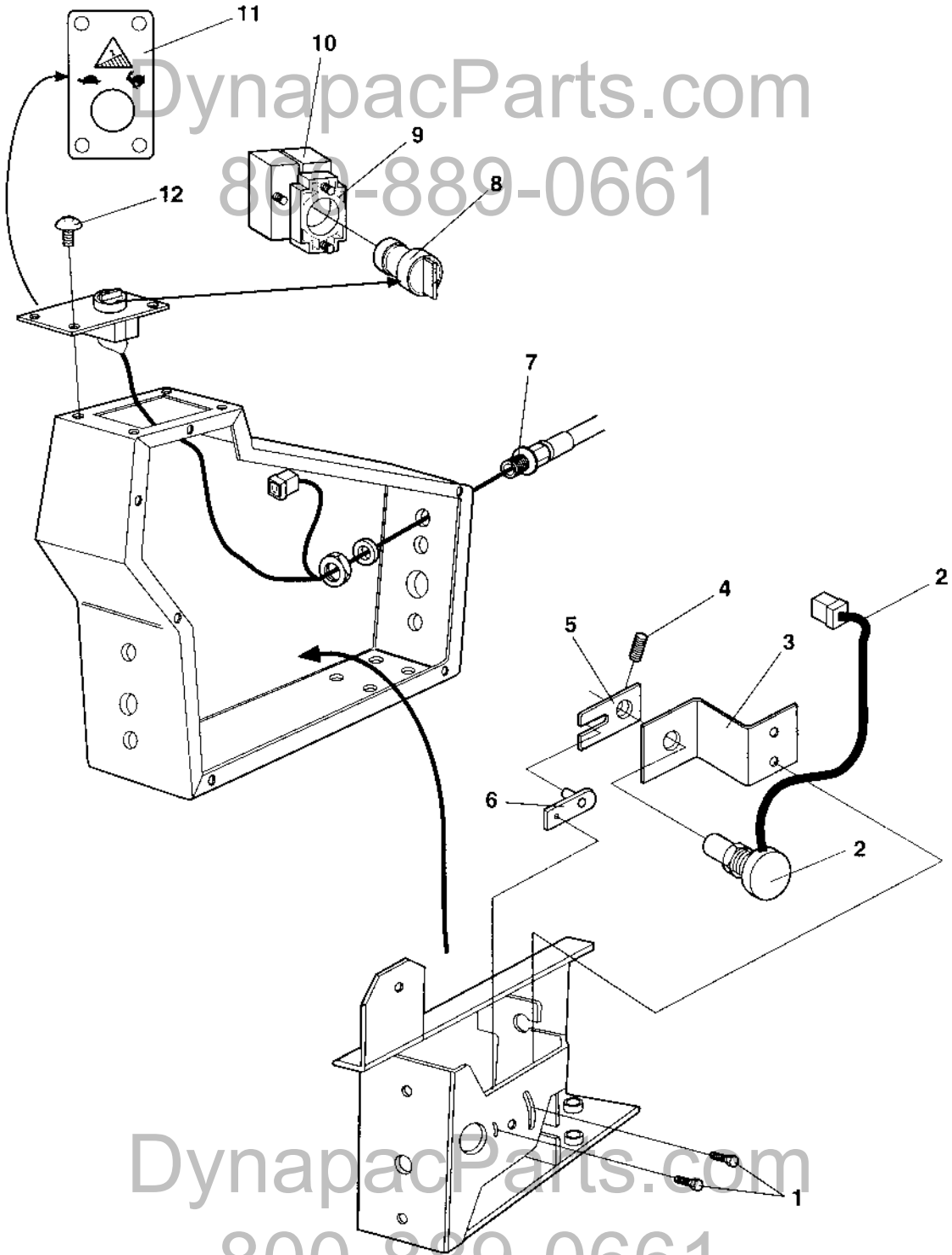

DynapacParts.com
800-889-0661

Anti spin, Potentiometer installation

Ref. No.	Part No.	Rem.	Qty	Description	Code
1	533008		3	Screw	
2	374190		1	Potentiometer	
3	373901	A	1	Bracket	
4	904227	A	1	Set screw	M3 x 4
5	373903	A	1	Clevis	
6	373905		1	Plate	
7	382070		1	Cable harness	
8	932058		1	Switch	
9	903876		1	Connector	
10	932060		1	Contact block	
11	382071		1	Control panel plate	
12	904206		4	Screw	

A) Removes with new part: 374190

DynapacParts.com
800-889-0661

DynapacParts.com
800-889-0661

Anti spin, Hydraulic

17293

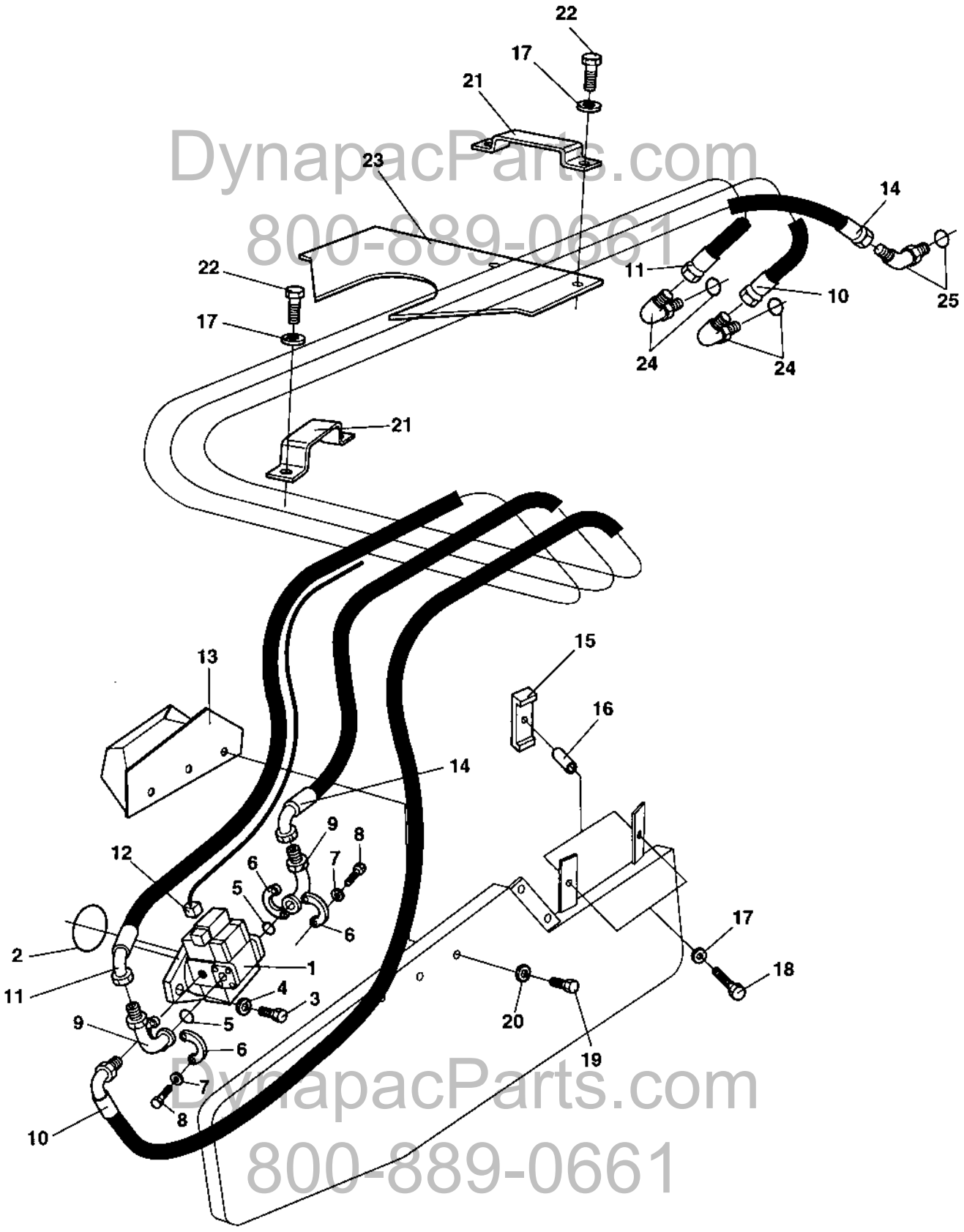

DynapacParts.com
800-889-0661
DynapacParts.com
800-889-0661

Anti spin, Hydraulic

Ref. No.	Part No.	Rem.	Qty	Description	Code
1	382088		1	Hydraulic motor	Anti spin
2	904058		1	O-ring	
3	500101		2	Screw	M20x50
4	903290		2	Washer	21x36x6
5	904005		2	O-ring	
6	923384		4	Flange half	
7	604008		8	Washer	
8	502132		8	Screw	UNC 7/16" x 22
9	903750		2	Elbow	
10	483114		1	Hydraulic hose	
11	483115		1	Hydraulic hose	
12		A	1	Cable harness	
13	374251		1	Protecting cover	
14	483116		1	Hydraulic hose	
15	373270		2	Hose clamp	
16	373423		2	Spacer	
17	904229		6	Washer	
18	500032		2	Screw	M10 x 55
19	500077		3	Screw	
20	904230		3	Washer	
21	373016		2	Hose clamp	
22	500029		4	Screw	
23	372235		1	Hose guard	
24	813499		2	Elbow 90, O-ring	
25	334132		1	Elbow 45, O-ring	

A) See section "Anti spin CA".

DynapacParts.com
800-889-0661

DynapacParts.com
800-889-0661

Roof hatch

17374

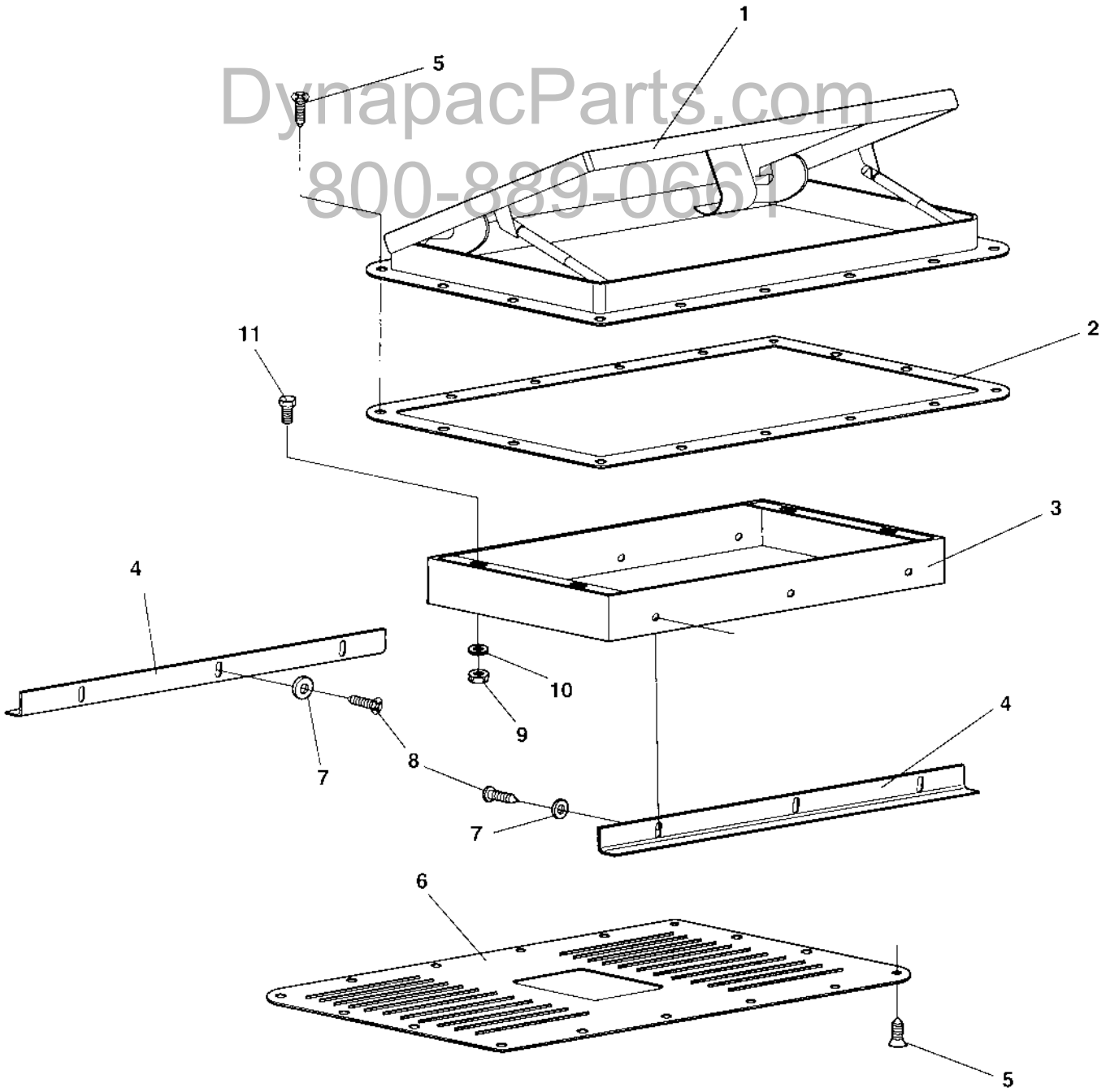

DynapacParts.com
800-889-0661

DynapacParts.com
800-889-0661

Roof hatch

Ref. No.	Part No.	Rem.	Qty	Description		Code
1	384958		1	Roof hatch		
2	384954		1	Support plate		
3	382699		1	Inner roof insert		
4	383002		2	Inner roof holder		
5	904906		32	Screw		
6	382700		1	Inner cover		
7	601001		6	Washer		
8	903852		6	Screw	ST4,2x13	
9	570004		4	Nut	M6	
10	904228		4	Washer		
11	500040		4	Screw		

DynapacParts.com
800-889-0661

DynapacParts.com
800-889-0661

Fire extinguisher assembly

17810

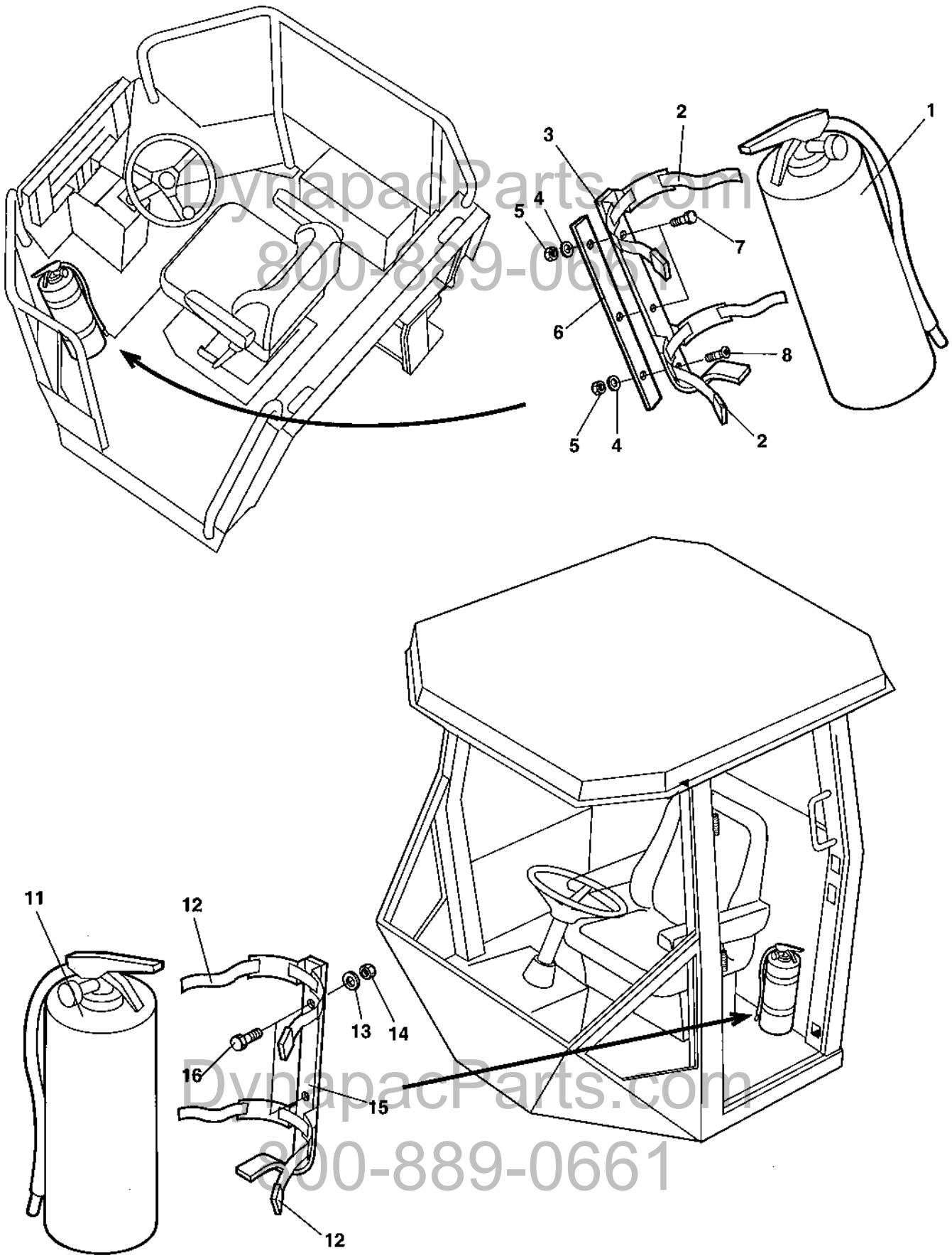

DynapacParts.com
800-889-0661

Fire extinguisher assembly

Ref. No.	Part No.	Rem.	Qty	Description		Code
1			NA	Fire extinguisher	4 Kg	
2	791102		2	Toggle fastener belt		
3	904994		1	Bracket		
4	904230		5	Washer		
5	570006		3	Nut		
6	383932		1	Bracket		
7	500029		2	Screw		
8	513025		1	Screw		
11			NA	Fire extinguisher	4 Kg	
12	791102		2	Toggle fastener belt		
13	904230		4	Washer		
14	570006		2	Nut		
15	904994		1	Bracket		
16	500028		2	Screw		

DynapacParts.com
800-889-0661

DynapacParts.com
800-889-0661

Heater, Simple cab Option

18163

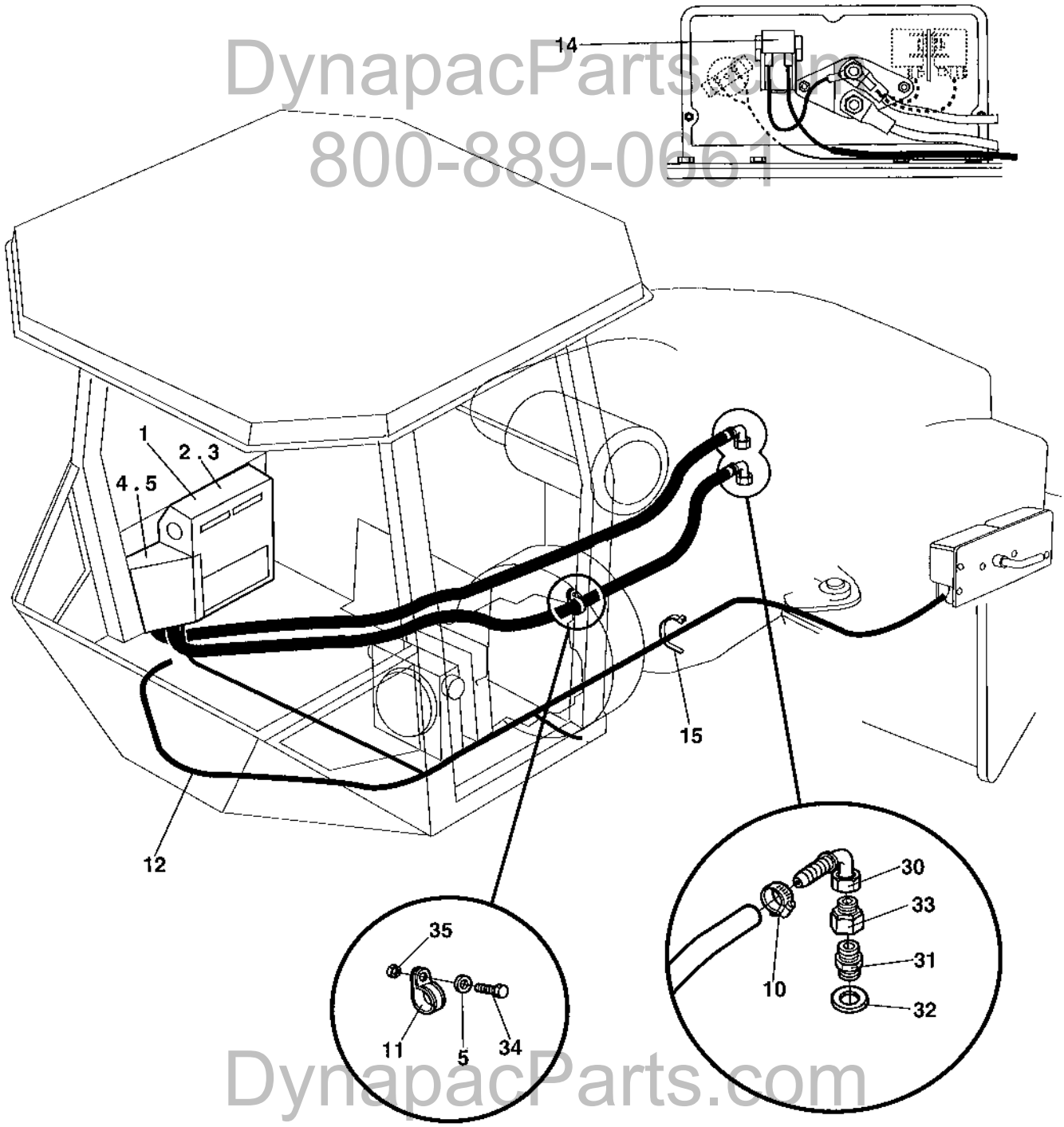

DynapacParts.com
800-889-0661
DynapacParts.com
800-889-0661

Heater, Simple cab Option

Ref. No.	Part No.	Rem.	Qty	Description		Code
1	385222		1	Heater (Page 336)		
2	500019		4	Screw		
3	904229		4	Washer		
4	500013		2	Screw		
5	904228		4	Washer		
10	313002		2	Hose clamp	13-20 mm	
11	921063		1	Clamp		
12	387466		1	Cable harness		
14	904294	A	1	Fuse		
15	313102	N		Cable ties		
30	791920		2	Hose connection		
31	791466		2	Adapter		
32	330334		2	Copper washer	26x31x2	D
33	791921		2	Adapter		
34	500040		1	Screw		
35	902285		1	Lock nut		

A) 20A, Yellow High.

DynapacParts.com
800-889-0661

DynapacParts.com
800-889-0661

385222 Heater

17784

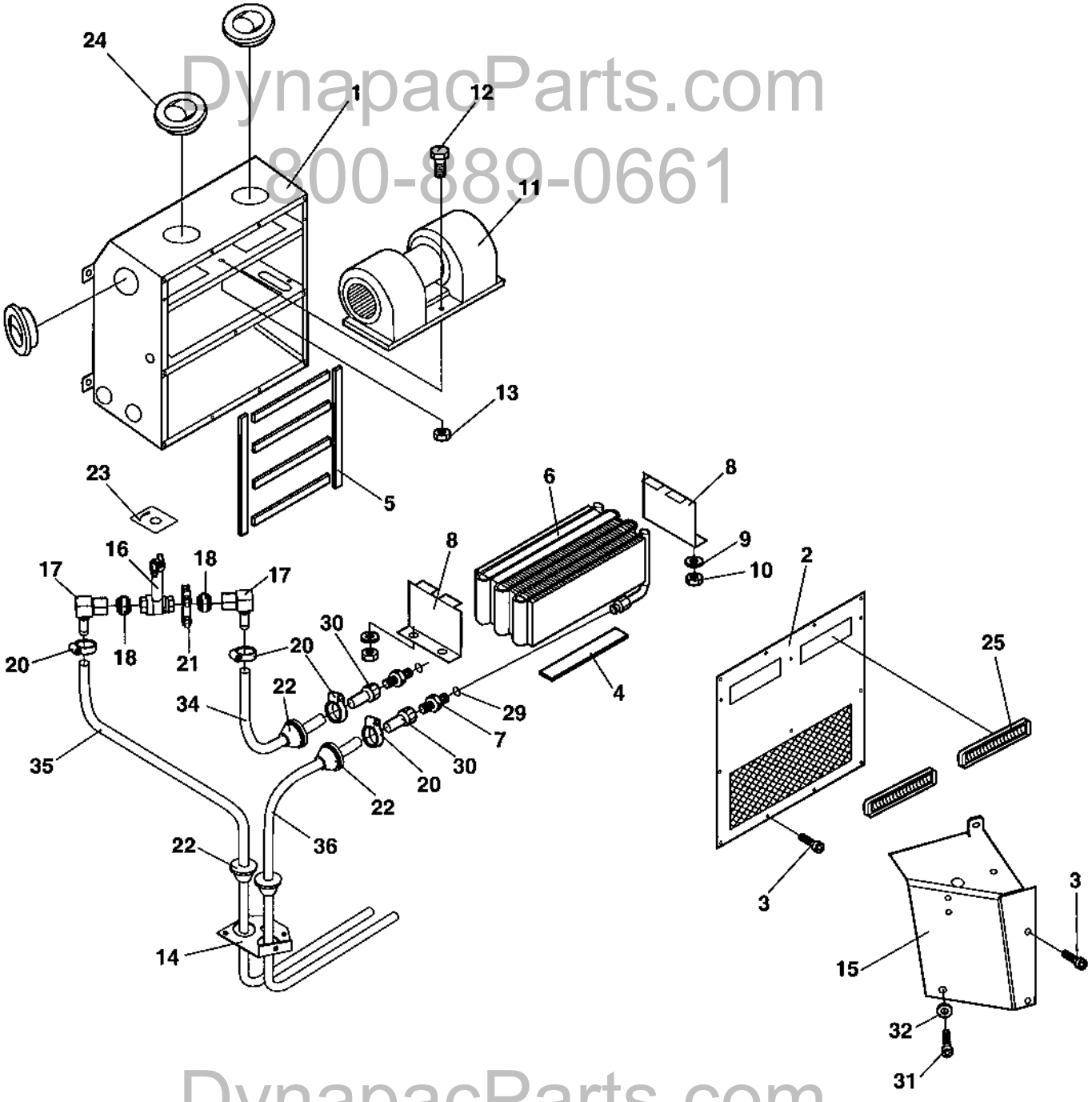

DynapacParts.com
800-889-0661

DynapacParts.com
800-889-0661

385222 Heater

Ref. No.	Part No.	Rem.	Qty	Description		Code
1	938587		1	Heater box		
2	938588		1	Cover plate		
3	935259		15	Screw		
4	908587	A	1	Edge trim		
5	935556	B	1	Sealing		
6	908585		1	Radiator		
7	908589		2	Connector		
8	935557		2	Heater element bracket		
9	904228		4	Washer		
10	570004		4	Nut	M6	
11	908595		1	Fan, cpl		
12	500006		1	Screw	M5x16	
13	586001		1	Lock nut		
14	938589		1	Plate		
15	938590		1	Control panel		
16	937738		1	Ball valve w. lever		
17	937742		2	Connector		
18	937741		23	Connector		
20	313003		4	Hose clamp		D
21	923984		1	Clamp		
22	908496		1	Grommet		
23	938856		1	Cable harness	Work light	
24	908513		3	Nozzle		
25	908598		2	Nozzle		
29	908588		2	O-ring		
30	935558		2	Adapter		
31	500013		1	Screw		
32	904735		1	Washer		
34	937737	C	1	Hose		
35	937737	D	1	Hose		
36	937737	E	1	Hose		

A) L=2,5 m
B) L=1 m
C) L=0,7 m
D) L=3,6 m
E) L=3,6 m

DynapacParts.com
800-889-0661

DynapacParts.com
800-889-0661

PD-Scrapers, Special Field kit

18185

DynapacParts.com
800-889-0661

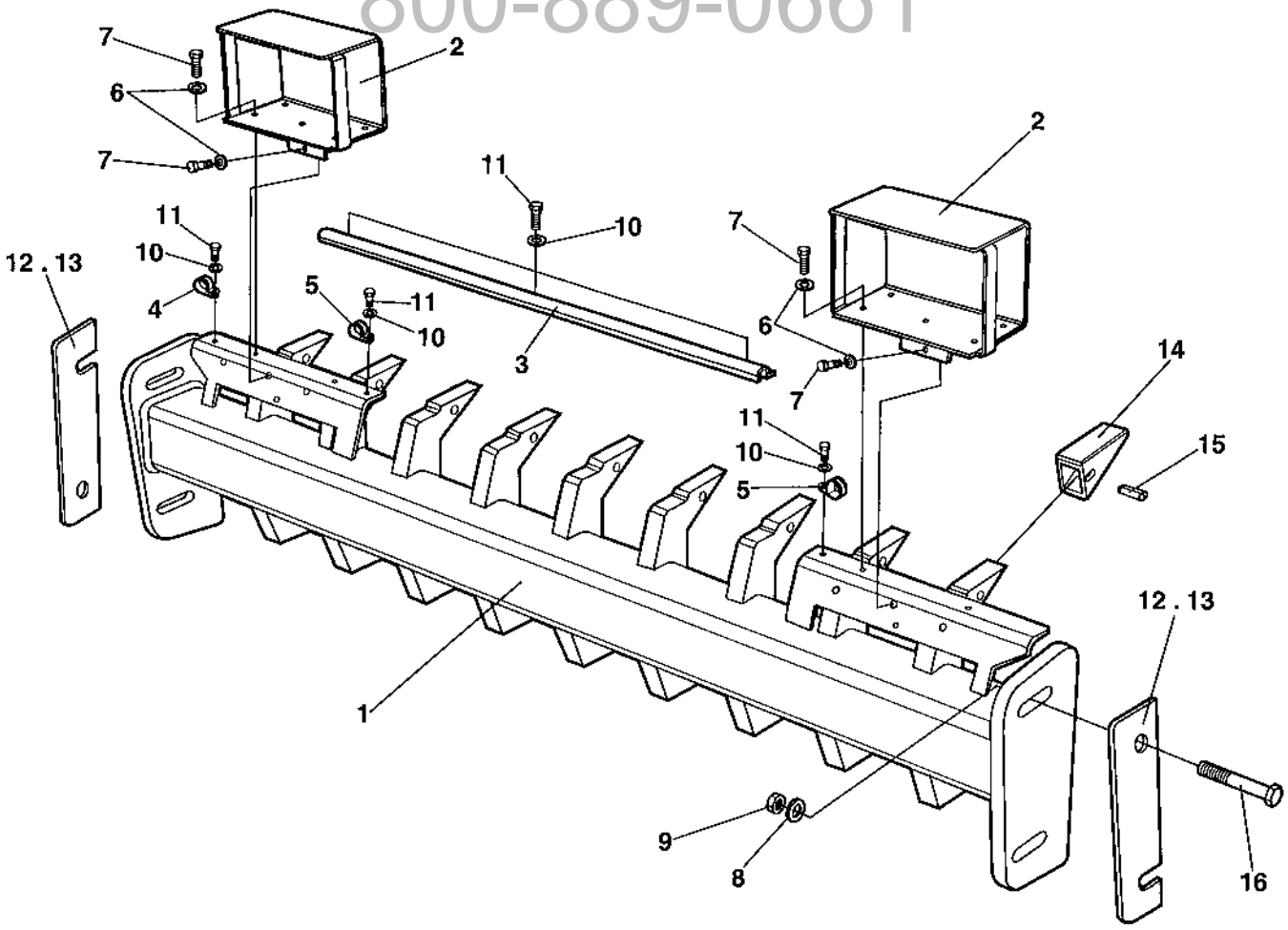

DynapacParts.com
800-889-0661

PD-Scrapers, Special Field kit

Ref. No.	Part No.	Rem.	Qty	Description		Code
1	377249		1	Scraper		
2	377250	A	2	Lamp shield		
3	377251	A	1	Cable holder		
4	921078	A	1	Clamp		
5	921031	A	4	Clamp		
6	904229		12	Washer		
7	500053		12	Screw		
8	904559		4	Washer	25x45x8	
9	586023		4	Nut	M24-8 DIN985	
10	904228		8	Washer		
11	500012		8	Screw		
12	377316		N	Shim	T=2MM	
13	377317		N	Shim	T=3MM	
14	383844		18	Tooth		B
15	801631		18	Flexible pin	56,5x40	B
16	925671		4	Screw	M24-3,0x140 8,8	
	500146		4	Screw	M24-3,0x110 8,8	

A) Used when Traffic- /Driving lights are mounted on the machine.

DynapacParts.com
800-889-0661

DynapacParts.com
800-889-0661

DynapacParts.com
800-889-0661

DynapacParts.com
800-889-0661

NUMERICAL INDEX

Part Number	Page	Part Number	Page	Part Number	Page
100040	17,33	313010	65,69	345885	47
100071	309	313041	75,167,175,177	346214	309
116041	21,49,51		179,181,183,189	346215	309
150004	215		197,199,221	346216	309
160105	21,49,51	313068	313	346217	309
160132	123	313075	65,69	346230	311,315
162008	111	313093	77,315	347119	27,131,309
162011	49,51,53,55	313094	77,79	347512	203
162017	49,51,53,55	313102	111,123,127,175	348213	175,177
162018	49,51		177,181,199,335	348309	71,73
162024	51	313147	221	348331	209
162027	49,51,53,55	330331	63	348481	221
167023	49,51	330333	97,103	349220	293
167032	17,33	330334	335	349248CN	293
202028	203,207	330383	63	349248DE	293
202041	65,69	334116	311	349248DK	293
202043	259	334117	75	349248EN	293
202047	35	334121	123,127	349248ES	293
202056	37,65,69	334122	123	349248FI	293
212553	93,101	334132	107,111,143,329	349248FR	293
230384	61	334135	141,311,315	349248GR	293
230515	63	334138	107,111	349248IS	293
230516	61	334140	111	349248IT	293
232039	137,139	334143	127	349248NL	293
232097	127	334158	127	349248NO	293
232210	47,49,51,53,55	334163	111	349248PT	293
232222	111	334190	311	349248SE	293
233304	137,139	334196	141	349682	47
234131	315	334197	311	349715	49,51
234218	127	334203	127	349879	137,139
234219	311	334205	123,135	349880	137,139
234243	111	334248	127	350009	215
234382	61,75,123	334264	141	355132	185
234388	141	334389	135	355135	185
234481	311	334468	111,127	355258	155,157
234622	141	334604	315	355301	163,165
234626	127	337042	33	355639	29
234659	315	337045	17,33	355677	47
234662	75	340863	125	355705	263
234667	127	343159	33	355890	303
234843	135	343318	49,51	355983	83,85,87,89
234875	111	343322	49	356028	53
234888	135	343480	47,51	356029	49
234900	127	343550	155,165	356273	311
234909	111	343551	155,163	356348	141
234953	311	343552	313	357138	13,137,139
234958	111	343744	49,51,53,55	357488	27,309
234990	315	343748	263	357526	153,161
244002	191	343775	27,309	357562	149
244054	75	343801	47	357643	205
272372	295	344962	29	357855	151
272373	293	345139	153,161	358388	109
287373	221	345243	111	358452	173
287597	149	345678	47	358881	151,185,293,299
287598	149,317	345679	47	359043	219
288129	65,67,69	345870	155,157	359125	219
310008	17	345871	17,33	359340	155
311016	303	345872	17,33	359341	155
313002	75,335	345873	17,33	359343	157
313003	249,251,321,337	345874	17,33	359419	209,211
313004	65	345875	17,33	359550	111
313006	69	345884	47	359551	111

DynapacParts.com
800-889-0661
DynapacParts.com
800-889-0661

NUMERICAL INDEX

Part Number	Page	Part Number	Page	Part Number	Page
359552	111	372044	137	372844	27
359574	209,211	372053	203	372889	47
359575	221	372066	35	372938	309
359818	219	372078	123	372961	219
359820	219	372080	107	372964	207,209,211
359845	151	372083	219	372965	219
359900	209,211	372087	27	372966	219
359914	207,209,211	372103	151	372967	183
359915	207,209,211	372104	151	372987	45,47,57
359916	215	372105	151	372997	147
359917	211	372204	163,165	373015	311
359918	201,207,209,211	372205	179	373016	107,143,311,329
	213	372206	143	373017	123
359919	215	372229	9,13,111	373131	83
359920	209,211	372230	47	373140	175,177
359921	215	372235	107,111,143,329	373176	83
359941	163,165	372321	221	373184	167,171
359971	211	372322	221	373196	37
359972	211	372358	61,63	373197	37
359998	265	372424	105,127,133	373203	35
370165	151	372435	111	373204	35
370211	209	372436	111	373270	107,123,143,329
370222	65,69	372457	205,265,281	373286	191,193
370229	61,63	372459	219	373309	37
370231	49,51	372489	229	373359	171
370234	207,209,265	372494	203,205,265,281	373360	171
370235	207,209	372495	183,189	373361	105,111,119,121
370255	203	372496	183,189	373363	295
370258	265	372497	183,185,189	373364	295
370720	315	372513	127	373421	33
370745	75	372514	127	373423	107,143,329
370766	229	372568	221	373424	123
370803	229	372575	37	373442	47
370953	71,73	372597	65	373443	47
370955	219	372608	35	373460	27,75
370977	207	372618	179	373547	219
370978	215	372625	127	373574	75
371009	221	372649	147	373746	307
371100	203	372653	215	373747	307
371202	203	372654	215	373748	307
371213	207	372658	37,303	373749	307
371270	207	372663	153,161	373750	307
371275	153	372665	159	373752	307
371364	173	372671	219	373756	307
371366	35	372672	215	373854	229
371374	219	372678	229	373855	229
371407	209	372695	35	373860	197
371418	219	372709	27	373891	147
371509	105,107,109	372718	75	373901	327
371511	47	372743	229	373902	323,325
371669	127	372745	229	373903	327
371727	63,179	372749	163,165	373905	327
371730	257	372757	203	373906	307
371767	39	372758	171	373907	307
371774	65,69	372759	171	373955	35
371837	305	372772	61,63	373956	37
371959	65,69	372782	221	373957	37
371966	203	372784	175	373979	197
371967	203	372785	203,205,265,281	373980	197
371968	207	372786	203,205,265	374017	35
372008	175	372836	175,177	374028	141
372029	137	372837	303	374029	167,171

DynapacParts.com
800-889-0661
DynapacParts.com
800-889-0661

NUMERICAL INDEX

Part Number	Page	Part Number	Page	Part Number	Page
374030	167,171	376488	229	381676	221
374059	111	376489	229	381760	49,51,53,55
374088	167	376551	31	381874	155
374089	167	376622	31	381989	37
374098	151	376700	27	382051	143
374099	151	376896	193	382070	323,327
374120	167	376935	181	382071	327
374137	105,111,115,117	376936	181	382088	329
374140	191	376937	181	382089	323,325
374168	167	376938	181	382098	323,325
374184	167	376944	43	382129	35
374190	327	376945	43	382130	35
374194	167	377098	77	382131	35
374195	167	377249	339	382132	35
374196	167	377250	339	382133	323,325
374251	143,329	377251	339	382165	35
374306	309	377316	339	382213	225
374327	167	377317	339	382225	225
374379	151	377518	281	382259	29
374398	173	377582	311	382335	35
374417	219	377707	65	382336	35
374463	183	377742	295	382349	227
374471	203	377743	295	382355	37
374526	167	377744	293	382382	37
374567	41	378110	189	382384	35,37
374577	263	378131	325	382387	35,37
374583	41	378132	325	382397	281
374585	39	378133	325	382549	185
374589	39	379204	315	382558	39
374590	39	379236	287	382582	281
374591	39	379410	85,87	382699	331
374592	39	379411	85,87	382700	331
374606	205,265,281	379412	85,87	382751	293
374607	205,265,281	379413	85,87	382782	149
374744	27	379414	85,87	382849	203
374797	35	379608	285	382884	221
374798	35	379631	87,89	383002	331
374799	35	379632	87,89	383200	229
374813	311	379691	87,89	383225	229
374816	313	379876	55	383409	315
374817	311	379878	51	383410	319
374838	313	379880	51,55	383413	315
374842	313	380018	49,51,53,55	383414	321
374854	37	380078	125	383417	319
374900	33	380109	35	383418	319
374933	215	380145	105,123,125	383419	319
374934	215	380660	153	383420	319
375000	311	380708	163,165	383422	319
375031	105,127,131,309	380727	203	383424	315
375041	79	380830	111	383425	321
375105	313	380967	49	383440	27
375152	61,63	380993	17,33	383452	175,177
375182	79	381011727	315	383705	205
375205	313	381027	49,51	383844	29,339
375678	37	381028	49	383856	81,99,323,325
375681	37	381400	209,211	383857	81,83,85,87,89
376045	27	381403	215		91
376068	195	381413	65,69	383932	333
376079	203	381567	215	383933	83,85,87,89
376109	311	381571	215	383955	83,85,87,89
376118	203	381615	147	383956	83
376252	203,205,265,281	381634	49,51,53,55	383958	123

DynapacParts.com
800-889-0661

NUMERICAL INDEX

Part Number	Page	Part Number	Page	Part Number	Page
383974	83,85,87,89	386841	77,79	387998	225,227
383975	83,85,87,89	386842	71,73	388015	225,227
383976	83,85	386843	71,73	388061	127
383977	83,85	386844	65,69	388088	73
383978	83	386845	65	388111	73
383979	83	386847	65,69	388144	75
383980	83	386848	65	388145	83,85,87,89
383981	83	386849	69	388146	83,85,87,89
384069	179,181	386850	65	388163	225
384070	197	386851	65	388186	27
384114	47,49,51	386853	65,69	388187	71
384121	47	386871	27	388189	199
384160	293	386879	71,73	388209	199
384162	167,171	386902	147	388210	177
384163	169,171	386904	65,69	388211	177
384174	321	386926	61,63	388212	199
384176	321	386934	75	388213	199
384177	321	386937	77	388214	199
384187	321	386942	71,73	388779	61
384190	315	386943	65,69	388855	63
384382	49,53	386952	77	388981	253,261
384402	279	386954	77	389075	165
384403	279	386956	75	389119	165
384498	17,33	386957	75	389138	63
384584	203	386958	75	389145	67,69
384589	317	386962	79	389151	139
384759	205,281	386966	71,73	389152	139
384760	321	386973	79	389174	227
384761	321	387005	147	389175	227
384762	321	387032	71,73	389177	227
384873	315	387086	77	389183	227
384874	315	387107	61,63	389566	143
384875	315	387108	61,63	389570	199
384876	315	387109	61,63	389577	173
384877	315	387112	75	389591	199
384878	315,321	387124	65,69	389786	197
384879	315	387128	61,63	389907	31
384880	321	387129	61,63	390587	89
384881	251,321	387133	161	390588	89
384897	321	387159	77	390589	89
384927	251,321	387175	229	390759	89
384954	331	387176	35	390760	89
384958	331	387178	71,73	390771	51
385134	251,321	387186	71,73	390896	51,55
385152	315	387217	65,69	390897	51
385222	335,337	387218	65,69	390927	289
385263	169	387220	147	392002	127,129,309
385434	231,249,251	387221	147	392100	129
385442	249	387407	127	392103	129
385443	249	387466	335	392105	129
385526	187,189	387571	199	392930	149
385527	187,189	387680	65,69	394686	13,71,73
385542	187	387698	113	394687	13,71,73
385551	185	387708	61	395325	221
385994	223	387941	199	415193	309
386002	223	387952	309	416034	217
386003	223	387953	309	416404	39
386272	21	387954	309	465013	221
386789	77,79	387955	309	470021	147
386819	71	387968	199	476019	305
386820	71,73	387969	199	480446	133
386835	27	387994	75	480447	133

DynapacParts.com
800-889-0661
DynapacParts.com
800-889-0661

NUMERICAL INDEX

Part Number	Page	Part Number	Page	Part Number	Page
480449	133	500019	209,237,255,257	500186	223
480450	133		287,311,323,325	500188	27
480456	133		335	500191	309
480468	133	500021	37,77,173,203	500192	137,139,315
482056	135		207,209,215,219	500194	47,63,123,175
482182	111		221,229,303,307		177,309
482243	311		323,325	500195	61,63,203,205
482328	315	500022	39,71,73,77,79		281,309
482391	111		311,317,323,325	500196	49,51
482399	135	500023	127,315	500226	203
482435	127	500026	35,319	500239	229,315
482516	135	500028	35,61,63,111,123	500240	43
482525	311		209,211,225,227	500263	111
482588	311		333	500267	221
482726	141	500029	27,39,43,61,63	500287	33
482728	311		65,69,107,143	500292	185,263
482767	127		203,205,207,265	500463	127
482828	311		281,329,333	500505	37
483024	123	500030	35,75,123	502019	123
483026	127	500031	113,203,211	502034	127,207
483031	123	500032	107,123,143,329	502036	215
483033	111	500033	27,311	502078	123
483037	111	500037	33,61,63,111	502132	107,111,143,329
483061	127	500040	37,65,69,75,147	508001	319
483087	311		151,167,171,209	508005	265
483109	127		211,215,331,335	508027	319
483114	143,329	500043	27,75,167,171	508029	127
483115	143,329	500046	111	508053	61,63
483116	143,329	500047	177,233,319	508056	219
483119	107	500051	47	508057	319
483120	107	500053	41,61,63,65,69	508092	221,319
483122	135		71,77,79,141,147	513003	219
483188	141		189,203,207,209	513009	167
483190	107		211,221,223,233	513012	147
483250	311		287,339	513013	219
483251	311	500056	181	513025	333
483286	123	500060	185	516051	215
483445	141	500061	321	527002	47
483480	315	500067	319	533008	327
483483	323,325	500070	61,63	533010	167
483500	123	500075	69,189,207,243	533013	149
483501	123	500077	143,329	533024	217
483510	311	500079	75,175,177	533038	221
483527	111	500082	47,49,51,53,55	535004	185
483548	315	500086	163,165,321	535005	275
483614	127	500088	37	535007	233,237
483615	127	500093	61,63	535011	35
483616	111	500100	229	535013	185,203
483618	311	500101	107,143,329	535014	185
499162	197	500102	29	535015	203
500004	187,189,191,233	500103	181	541507	37
500006	147,185,245,337	500109	111	541535	167,233
500012	67,69,147,167	500115	233	541702	171,173
	171,225,227,339	500121	265	541703	167,197
500013	37,71,73,113,173	500133	35	541704	187
	181,193,195,199	500146	47,339	550038	309
	219,315,335,337	500147	29,31	570002	163,165
500015	225,227,249	500153	307	570004	37,149,217,221
500018	33,37,65,69,141	500154	31,63		237,315,331,337
	233	500163	49,51,53,55	570005	35,147,207,209
500019	37,71,73,107,123	500165	31		211,281,319
	137,139,167,203	500169	217	570006	137,139,203,209

DynapacParts.com
800-889-0661
DynapacParts.com
800-889-0661

NUMERICAL INDEX

Part Number	Page	Part Number	Page	Part Number	Page
570006	211,315,333	791423	69	901227	149,247,253,261
570007	47,181	791452	199	901229	247
573004	221	791466	335	901240	149,247
573008	219	791477	147	901256	149
581018	203	791503	147	901369	167,171
582006	195	791504	147	901385	125
586001	167,185,191,233	791507	147	901386	125
	337	791508	147	901387	125
586002	151,163,165,185	791512	147	901389	125
	189,193,203,209	791513	113	901390	125
	211,215,217,223	791514	147	901391	125
	243,263,307	791573	83,85,87,89	901443	83,85,87,89
586003	73,127,147,173	791575	75	901444	83,85,87,89
	215,221,223,233	791642	293	901453	109,115,119
	237,255,307,315	791920	335	901464	115
586018	75	791921	335	901465	109
586019	61,63,181,221	791933	49	901467	109
	309	791967	259	901766	191
586021	257	791968	259	901767	37,149
586022	203	792261	85,87,89	901828	49
586023	339	801187	23,47	901832	317
588176	293	801199	311	901834	91,99
600016	129,131,309	801251	309	901987	97,103
600019	309	801259	309	902064	167
601001	331	801631	29,339	902066	167
603001	215	801669	179,181	902125	141
603019	209	813316	127,309	902166	35,65,69,77
604008	329	813379	83,85	902203	221
604012	111	813380	83,85	902223	149
615041	217	813391	27	902227	167,171
615045	111	813434	147	902239	83
615046	29	813444	311	902284	35,147
624005	293,305	813499	107,111,143,329	902285	37,65,69,75,147
624016	217,229,293	813500	127,311		151,175,177,335
624021	199	813618	119	902286	35,71,73,175,177
629066	257	813791	71,73	902287	111,311
630008	309	813822	109,115,119	902288	175,177,309
630020	309	814261	71,73	902496	175,177
630035	219	900229	111	902508	305
635061	27,129,131,309	900430	123	902520	219
747282	75	900552	135	902581	111,115,119
747691	63	900604	111	902610	303
791045	147	900775	49,51,53,55	902655	125
791094	293	900776	19,49,51,53,55	902861	133
791102	333	900782	19,49,51,53,55	902862	133
791119	137,139	900784	19,49,53	902866	35,37,203
791120	137,139	900790	167	902919	27
791144	321	900798	191	902926	115
791156	49,51,53,55	900957	95	902928	109,115,119
791175	85,87,89	900966	95	902929	115,119
791176	85,87,89	900986	221	902930	115,119
791218	205,281	901145	47,83,85,87,89	902944	115,119
791226	205		205,265,281	902957	115
791253	163,165	901155	123	902959	115
791275	293	901157	123	902960	115,119
791276	293	901209	183,185,187,189	902961	115,119
791277	293	901218	83,85,87,89	902962	119
791278	293	901219	83	902984	115,119
791312	223	901220	303	902995	117
791313	223	901224	149,177	902996	115,119
791314	223	901225	149,247	903053	109
791371	147	901226	149	903189	51

DynapacParts.com
800-889-0661
DynapacParts.com
800-889-0661

NUMERICAL INDEX

Part Number	Page	Part Number	Page	Part Number	Page
903190	51	904015	183,189	904233	89,203,205,265
903281	47	904016	155,157		281,309
903290	107,143,203,205	904032	147	904234	29,31,47,61,229
	265,281,329	904036	147	904237	293
903422	293	904037	147	904241	35,65,69
903423	295	904038	167,171	904244	35
903424	295	904058	107,143,329	904281	147,167,185,187
903425	295	904060	71,73		189,191,233,237
903436	151	904068	293,295	904282	111
903457	133	904069	295	904290	223
903459	293	904075	37	904294	335
903494	125	904076	37	904302	313
903495	125	904114	243	904313	167
903570	109	904140	183,189	904314	171
903571	109	904143	131	904315	167
903599	151	904145	131	904316	167
903600	151	904165	315	904317	167
903601	151	904180	229	904318	167
903602	151	904206	75,163,165,203	904340	185,263,307
903619	131		209,211,327	904352	65,69
903625	149	904207	151	904407	39
903631	147	904208	151	904409	39
903644	219	904210	61	904433	203,205,265,281
903653	151	904213	111,181,309	904448	147
903657	153,159,161	904214	215	904486	65,69
903658	151,165,221,313	904216	323,325	904543	167,171,189,191
903670	75	904217	323,325		193
903678	151	904227	327	904551	65,69
903714	65,69	904228	37,39,65,69,71	904556	35,219,221,223
903717	189		73,147,151,163	904557	27,35,203,207
903732	35		165,167,171,173		209,211
903741	149,247		181,185,189,193	904559	339
903750	143,329		195,199,203,207	904562	229
903768	147		209,211,215,219	904563	39
903769	179,181		223,225,227,243	904567	37,43,137,139
903770	179		263,307,315,321		315
903782	287,321		331,335,337,339	904601	295
903812	127	904229	27,33,39,61,63	904619	229
903831	127		65,69,71,73,77	904637	61,63,127
903852	167,171,189,191		79,107,123,127	904638	61,63,107,111
	193,331		137,139,141,143		127,143
903875	159		147,167,173,189	904639	75,147
903876	153,159,161,163		199,203,207,209	904640	35,41,65,69,71
	165,327		211,215,219,221		73,77,79,199,203
903877	123		233,249,255,257		207,215,223,229
903897	191		281,287,307,311		303
903899	167		315,317,319,329	904663	17
903905	265		335,339	904698	149,163,165,185
903907	185,203	904230	27,37,39,65,69	904703	61,63
903914	211		75,107,111,123	904704	163,165
903917	215		127,143,167,171	904734	215,229,323,325
903918	215		203,205,207,211	904735	215,337
903919	47		215,225,227,265	904737	49,51,53,55
903927	155		281,309,311,315	904739	215
903942	9,11,13,61,63		329,333	904767	123
903961	151	904231	33,37,47,49,51	904773	123
903969	167,183,191,193		111,123,181,203	904774	123
	305		205,219,221,265	904775	183
903970	149		281,309	904781	123
903985	83,85,87,89	904232	31,47,49,51,53	904793	111
904005	107,111,127,143		55,61,63,123,257	904802	215
	329	904233	47,63,83,85,87	904819	155

DynapacParts.com
800-889-0661
DynapacParts.com
800-889-0661

NUMERICAL INDEX

Part Number	Page	Part Number	Page	Part Number	Page
904835	293	908506	233,271,287	909566	93
904855	203	908507	233,271,287	909567	93,101
904865	313	908512	233	909568	93,101
904870	293	908513	337	909569	93,101
904874	35	908515	233	909570	93,101
904889	155,175,177	908545	237,239,241,269	909572	93,101
904890	155,175,177		273,285,289	909574	93,101
904906	331	908559	243	909576	93,101
904907	185	908560	243	909580	93,101
904908	185	908563	243	909581	93,101
904909	185	908564	243	909582	91,99
904910	193	908580	241,273,289	909583	91,99
904939	259	908581	241,273,289	909584	91,99
904941	203	908582	241,273,289	909586	97,103
904969	259	908583	241,273,289	909596	95,97,103
904970	259	908585	337	909607	95
904989	149	908587	233,337	909609	95
904994	333	908588	337	909616	95
905304	243,277	908589	337	909618	95
905305	243,277	908595	337	909619	95
905306	243,277	908598	249,337	909622	95
905307	243	908599	249	909624	95
905308	243	908600	249	909626	95
905309	243	908603	247	909745	217
905310	243	908605	247,277	909747	221
905311	243	908606	247	909748	221
905312	243	908607	247	910161	127
908110	149	908610	247	910995	33
908136	141	908611	247	911456	153,159,161
908187	217	908613	247	911620	133
908188	217	908617	247,277	921028	167
908189	217	908618	247	921031	75,171,185,189
908190	217	908623	245,275		339
908193	221	908624	245,275	921039	171,173,323,325
908200	221	908625	257	921046	199
908229	293	908626	257	921050	65,69,75
908265	257	908627	257	921056	315
908267	255	908628	257	921063	335
908355	257	908773	109	921065	197
908359	255	908987	241	921072	147,177
908361	257	909122	221	921078	181,339
908399	71,73	909152	313	921080	147
908422	119	909211	133	921104	75,209
908426	115,119	909252	109	921116	147
908427	115,119	909253	109	922325	221
908432	109,115,119	909255	109	923008	111
908435	115,119	909510	233,243	923087	109
908443	115,119	909525	117,121	923269	73
908450	11	909535	265	923342	93,101
908452	71,73	909536	265	923371	111
908485	93,101	909544	95	923384	107,111,143,329
908496	189,233,249,337	909550	93	923976	149,185,321
908497	243	909551	93	923984	337
908499	233,237,241,269	909552	93	924737	147
	271,273,285,287	909553	93	924791	185,263,307
	289	909558	93	925629	37
908500	233	909559	93	925671	339
908501	233	909560	93	925723	75,135
908502	233	909561	93	925784	233
908503	233	909562	93	925802	167,171,179,191
908504	233	909563	93		193
908505	233	909565	93	925846	323,325

DynapacParts.com
800-889-0661
DynapacParts.com
800-889-0661

NUMERICAL INDEX

Part Number	Page	Part Number	Page	Part Number	Page
926214	17,33,127,219	935233	213	935292	269
	309	935234	213	935293	237,269,285
926611	167	935235	213	935294	269
926658	109,115	935236	213	935295	237,269,285
926781	97,103	935237	213	935296	237,269,285
926810	95	935238	213	935297	237,269,285
926847	95	935239	213	935298	237,269,285
926985	37,65,69	935240	213	935299	237,269,285
927233	217	935241	213	935300	237,269,285
927350	125	935242	213	935301	237,269,285
927403	259	935243	213	935302	239,269,285
927637	35	935244	241,273,289	935303	239,269,287
927974	35,203,205,265	935245	241,273,289	935334	243
	281	935246	241,273,289	935335	243
928021	147	935247	241,273,289	935380	57
928381	217	935248	241,273,289	935394	57
928497	221	935249	241,273,289	935395	57
928502	167	935250	241,273,289	935398	57
928850	47	935253	241,273,289	935399	57
928908	75	935255	241	935400	57
929012	133	935256	241	935401	57
929013	133	935257	241	935402	57
929014	133	935258	241	935403	57
929217	83,85,87,89	935259	337	935404	57
929226	123	935260	241	935413	57
929447	21,49,51	935261	241	935414	57
929455	167	935262	241	935415	57
929612	97,103	935263	241	935421	57
929617	95	935265	241,273,289	935428	133
929625	101	935266	241,273,289	935429	133
929626	101	935267	241,273,289	935520	117,121
929628	93,101	935268	241,273,289	935521	115,119
929629	93,101	935269	241,273,289	935524	115,119
929630	101	935270	241,273,289	935525	115,119
929631	101	935271	237,241,269,273	935526	115,119
929638	93,101		285,289	935527	115,119
929644	93,101	935272	237,241,269,273	935530	115,119
929648	91,99		285,289	935531	115,119
929863	17	935273	241,269,273,285	935533	115,119
930150	147		289	935536	115,119
930151	175,177	935274	237,269,273,285	935543	115,119
930154	153,159,163,165		289	935544	115,119
	313	935275	237,269,273,285	935545	115,119
930161	159		289	935556	337
930163	153,159,161,163	935276	237,241,269,273	935557	337
	165		285,289	935558	337
930166	159	935277	237,241,269,273	935570	249
930192	161,163,165		285,289	935572	249
930200	163,165	935278	237,269,285	935577	233
932032	163,165	935279	237,269,285	935578	233
932034	159	935280	269,285	935579	233
932050	153	935281	237,269,285	935580	233
932056	159	935282	237,269,285	935581	233
932057	159	935283	237,269,285	935582	233
932058	153,159,161,327	935284	237,269,285	935583	233
932060	327	935285	237,269,285	935584	233
9335273	237	935286	237,269,285	935585	233
935225	221	935287	237,269,285	935586	233
935229	213	935288	237,269,285	935589	233
935230	213	935289	237,269,285	935590	233
935231	213	935290	237,269,285	935591	233
935232	213	935291	237,269,285	935594	235

DynapacParts.com
800-889-0661
DynapacParts.com
800-889-0661

NUMERICAL INDEX

Part Number	Page	Part Number	Page	Part Number	Page
935598	235	937106	167	938040	125
935599	235	937107	167	938041	125
935600	235	937108	167	938042	125
935603	183	937109	167	938043	241
935613	207,209,211	937121	241	938045	273
935614	207,209,211	937165	259	938101	273,289
935619	109	937256	125	938136	243
935621	109	937257	125	938170	111
935622	109	937258	125	938207	313
935623	109	937259	125	938224	241
935624	109	937260	125	938252	111
935625	109	937261	125	938253	111
935626	109	937262	125	938290	237,285
935629	109	937264	125	938291	237,285
935630	109	937265	125	938292	237,285
935631	109	937274	109	938296	95
935644	93	937275	109	938558	15,17
935664	115,119	937277	109	938587	337
935741	115,119	937278	109	938588	337
935749	115,119	937279	109	938589	337
935750	115,119	937280	109	938590	337
935771	217	937283	109	938597	317
935774	217	937363	121	938598	317
935853	109	937380	237,269,285	938599	317
935859	57	937381	237,269,285	938600	317
935860	57	937382	237,269,285	938602	317
935861	57	937383	237,269,285	938603	317
935862	57	937384	237,269,285	938605	317
935863	57	937385	237,269,285	938606	317
935864	57	937386	269	938617	251,321
935865	57	937387	269	938618	251,321
935866	57	937388	269	938619	321
935867	57	937389	237,269,285	938620	251,321
935868	57	937390	241,273,289	938621	251,321
935869	57	937391	241,273,289	938622	251,321
935870	57	937392	241,273,289	938623	321
935871	57	937393	241,273,289	938624	321
935872	57	937626	53	938625	251,321
935873	57	937627	49	938626	251,321
935874	57	937674	125	938627	251
935875	57	937737	249,337	938628	251
935876	57	937738	337	938629	251
935877	57	937741	337	938630	251
935878	57	937742	337	938631	321
935879	57	937870	279	938632	251
935880	57	937871	277	938633	251
935881	57	937932	235,237,241	938634	251,321
935882	57	937993	125	938635	251
935883	57	937995	125	938636	251
936267	131	938002	125	938638	251
936268	131	938016	241	938639	251,321
936277	237	938017	241,273,289	938640	251
936283	265	938018	241,273,289	938641	251
936589	115	938022	247	938643	251
936591	115	938024	241	938644	251
936592	115	938030	125	938645	251
936593	117,119	938031	125	938647	251
936600	237	938035	125	938658	237
936601	237	938036	125	938659	237,285
936602	237	938037	125	938660	243
936934	237	938038	125	938661	243
936935	237	938039	125	938662	243

DynapacParts.com
800-889-0661
DynapacParts.com
800-889-0661

NUMERICAL INDEX

Part Number	Page	Part Number	Page	Part Number	Page
938663	243	939273	97,103	991658	295
938664	243	939274	97	999011	173
938665	243	939275	97,103	999027	147
938666	243	939276	97,103		
938667	245	939277	97,103		
938668	245	939278	97,103		
938670	233	939279	97		
938671	233	939280	95		
938672	233	939281	95		
938673	233	939282	95		
938674	233	939283	95		
938675	233	939284	95		
938676	233	939285	95		
938677	233,235	939286	95		
938678	233	939287	95		
938679	233	939349	103		
938680	249	939351	103		
938681	235	939413	321		
938682	235	939415	61,63		
938683	235	939416	61,63		
938684	235	939417	61,63		
938685	235	939418	61,63		
938686	199	939419	61,63		
938687	247	939420	61,63		
938688	247	939421	61,63		
938689	253	939422	61,63		
938690	253	939423	61,63		
938691	249,261	939424	61,63		
938856	337	939425	61,63		
938881	15,23	939426	61,63		
938891	15,21	939427	61,63		
938894	15,19	939431	61,63		
938983	95	939464	147		
938984	95	939465	147		
938985	97,103	939466	75		
938989	93,101	939467	75		
939003	97,103	939468	75		
939015	97,103	939521	261		
939016	97,103	939522	261		
939017	97,103	939562	13		
939019	97,103	939568	5,7,9		
939026	95	939569	5,7,11		
939035	95	939570	5,7,13		
939036	95	939581	9,11,13,61,63		
939255	95	939603	261		
939256	95	939693	251		
939257	93,101	940678	273,289		
939258	93,101	945505	319		
939259	93,101	945585	55		
939260	93,101	945591	51		
939261	93,101	945757	115,119		
939262	93	947680	221		
939263	97,103	950368	109		
939264	97,103	960727	323,325		
939265	97,103	960792	163,165		
939266	97,103	985012	155,157,159,161		
939267	97,103	985013	167,233		
939268	97,103	985014	167		
939269	97,103	985051	233		
939270	97,103	985145	161		
939271	97,103	985146	159		
939272	97,103	989151	137,139		

DynapacParts.com
800-889-0661
DynapacParts.com
800-889-0661