DYNAPAC
PL2000S

SPARE PARTS
CATALOGUE

DynapacParts.com
800-889-0661

500.117

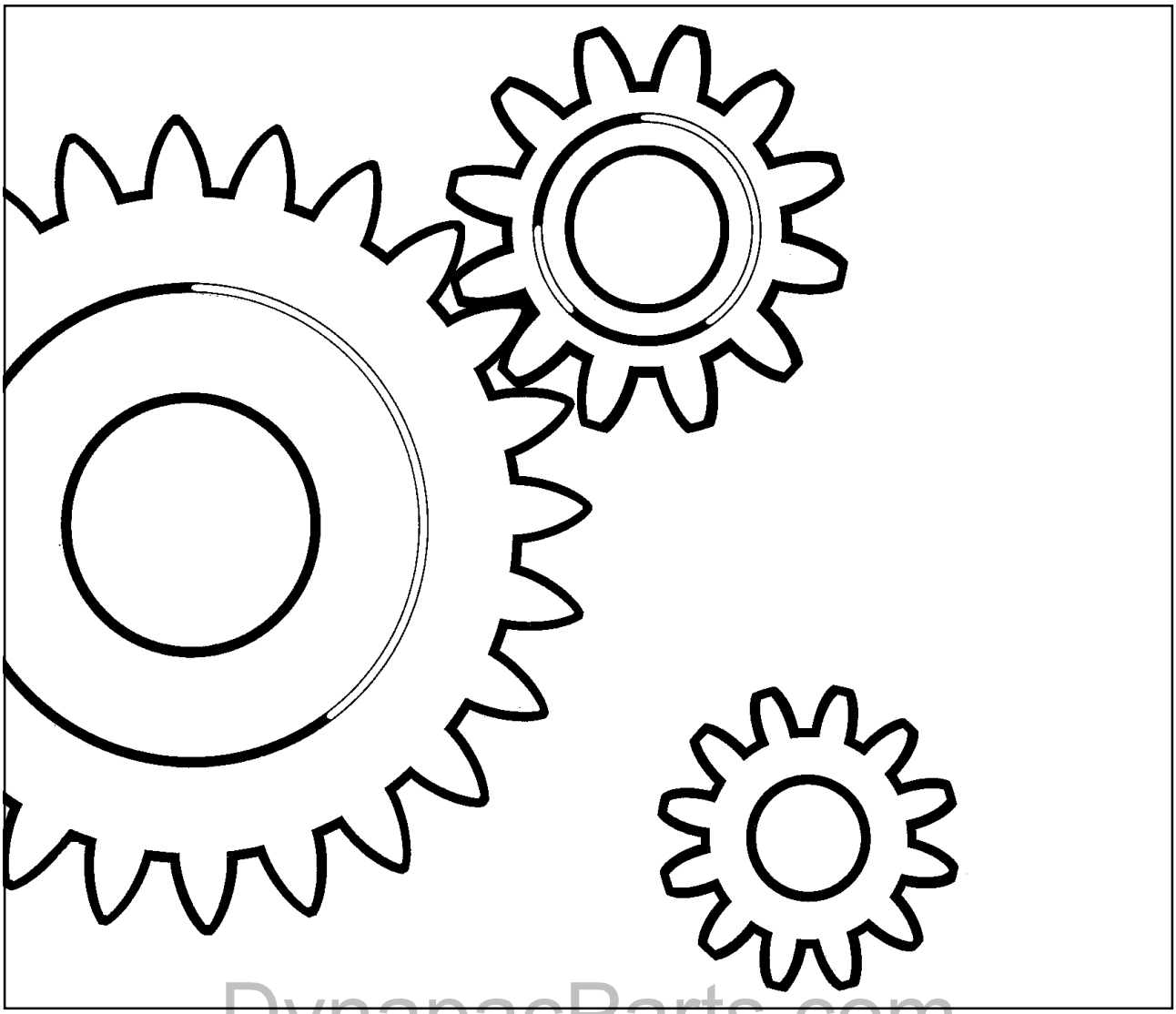

DynapacParts.com
800-889-0661

DYNAPAC

Ammerländer Straße 93, D-26203 Wardenburg, Germany
Phone: +49 4407/972-0, Fax: +49 4407/972-143
www.dynapac.com

DYNAPAC

www.DYNAPAC.com

DYNAPAC GmbH
Ammerländer Strasse 93
26203 Wardenburg / Germany
Tel.: +49 4407 / 972 - 0
Fax : +49 4407 / 972 - 228

Customer No.	*End User*	*Order No.*	*Delivery Date*
Paver Type / Serial No.		*Screed Type / Serial No.*	
Engine		*Engine Serial No.*	

DynapacParts.com
800-889-0661

INHALTSVERZEICHNIS
TABLE OF CONTENTS

Bemerkungen
Notes

500.117, Cold planer .....

Main frame .....

500-01200 Main frame .....
500-01210 Hood, front Tank protection .....
500-01220 Accessories box, belt protection .....
500-01230 Engine hood, foot room .....
500-01240 Mounting parts, Struttover .....
500-01250 Drivers step, safety rail .....
500-01260 Lift and tip up mechanism .....

Planer unit .....

500-02110 Cutting drum housing,side plates,spray system .....
500-02120 Side shields, compl. .....
500-02130B Tension lever, Cutting drum .....
951056556 Planetary gear .....

Material feeder (rigid) .....

500-03110 Sliding shoe .....
500-03120 Hoist arr., swivel unit .....
500-03130 Collating conveyor .....
500-03140 Collating conveyor .....
500-03150 Conveyor .....

Steering, compl. .....

DynapacParts.com
800-889-0661

DYNAPAC

www.DYNAPAC.com

DYNAPAC GmbH
Ammerländer Strasse 93
26203 Wardenburg / Germany
Tel.: +49 4407 / 972 - 0
Fax : +49 4407 / 972 - 228

Customer No.	*End User*	*Order No.*	*Delivery Date*
Paver Type / Serial No.		*Screed Type / Serial No.*	
Engine		*Engine Serial No.*	

DynapacParts.com
800-889-0661

INHALTSVERZEICHNIS
TABLE OF CONTENTS

Bemerkungen
Notes

500-04110 Steering, compl. ····

Track group ····

500-05210 Track group ····

Drive ····

500-06110C Drive unit ····

500-06120A Cooler ····

500-06132 Air filter, air intake ····

500-06140 Fuel system, Exhaust system, Mounting parts ····

Hydraulic equipment ····

500-07110 Hydraulik oil tank, compl. ····

500-07120 Steering 1 ····

500-07130 Steering 2 ····

500-07140 Drive ····

500-07150 Belt drive ····

500-07160 Rotation drives ····

500-07161 Fill pump (Option) ····

500-07170 Aggregat (with canopy) ····

Electric equipment compl. ····

500-08110 Operating stand guide ····

500-08130 Input ····

500-08150 Clamp box, compl. ····

DynapacParts.com
800-889-0661

DYNAPAC

www.DYNAPAC.com

DYNAPAC GmbH
Ammerländer Strasse 93
26203 Wardenburg / Germany
Tel.: +49 4407 / 972 - 0
Fax : +49 4407 / 972 - 228

Customer No.	*End User*	*Order No.*	*Delivery Date*
Paver Type / Serial No.		*Screed Type / Serial No.*	
Engine		*Engine Serial No.*	

DynapacParts.com
800-889-0661

INHALTSVERZEICHNIS
TABLE OF CONTENTS

Bemerkungen
Notes

500-08160 Clamp box, compl. ····

500-08170 Switch box for cameras ····

500-08301 Electric survey 2 ····

500-08302 Electric survey 3 ····

500-08200 Operator panel, right ····
500-08210 Operator panel, left ····

Water system ····

500-09110 Cooling system ····

Accessories ····

500-10110 Accessories box, rear shank bite box ····

500-10120 Quick disconnect holder ····

500-10121 Quick disconnect holder ····

500-10501 Round shank bit ····

Option ····

500-20110 Canopy ····

500-20120 GfK roof ····

500-20150 High pressure cleaner ····

500-20160 Water fill hose ····

500-20161 Fill pump ····

500-20200 Compressed-air plant ····

500-20210 Shank bit extensioner ····

500-20250 Pressure air hose ····

DynapacParts.com
800-889-0661

Pos. Item	Best.-Nr. Part No.	Anz. Qty.	Beschreibung Description	Bemerkung Note
	500117		Cold planer	
1			**Main frame**	
2			**Planer unit**	
3			**Material feeder (rigid)**	
4			**Steering, compl.**	
5			**Track group**	
6			**Drive**	
7			**Hydraulic equipment**	
8			**Electric equipment compl.**	
9			**Water system**	
10			**Accessories**	
20			**Option**	

DynapacParts.com
800-889-0661

DynapacParts.com
800-889-0661

Pos. Item	Best.-Nr. Part No.	Anz. Qty.	Beschreibung Description	Bemerkung Note
			Main frame	
	500-01200		**Main frame**	
	500-01210		**Hood, front Tank protection**	
	500-01220		**Accessories box, belt protection**	
	500-01230		**Engine hood, foot room**	
	500-01240		**Mounting parts, Struttover**	
	500-01250		**Drivers step, safety rail**	
	500-01260		**Lift and tip up mechanism**	

DynapacParts.com
800-889-0661

DynapacParts.com
800-889-0661

Main frame

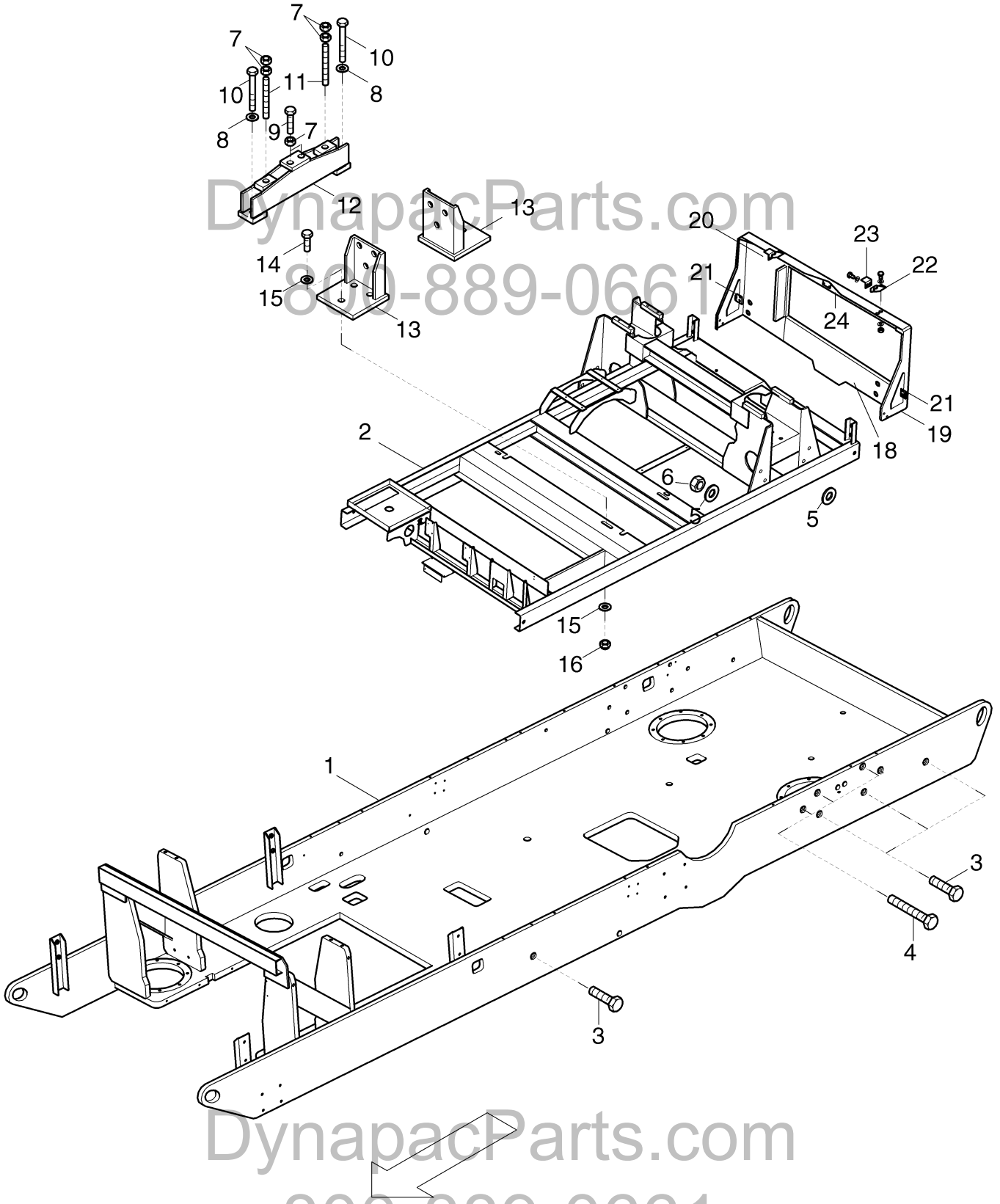

DynapacParts.com
800-889-0661

Pos. Item	Best.-Nr. Part No.	Anz. Qty.	Beschreibung Description	Bemerkung Note
			Main frame, engine Frame	
1	500110106	1	Main frame	
2	500210501	1	Engine frame	
3	938151087	8	Hex. screw	
4	938112152	8	Hex. screw	
5	600020	X	Disc	
6	570016	16	Hex. nut	M24 DIN 934
7	570015	8	Hex. nut	
8	600014	2	Disc	
9	938150986	2	Hex. screw	
10	938111950	2	Hex. screw	
11	930226020	2	Screw rod	
12	500010504	1	Adjustable engine support	
13	500010518	2	Engine support	
14	938111721	6	Hex. screw	
15	600011	12	Disc	
16	938480512	6	Safety nut	
18	500110215	1	Connection plate	
19	500210402	1	Holding plate, left	
20	500210403	1	Holding plate, right	
21	500210146	2	Bonnet holder	
22	500210156	2	Bonnet holder, top	
23	500210148	2	Hood angle holder	
24	500210410	1	U-profile, top	

DynapacParts.com
800-889-0661

DynapacParts.com
800-889-0661

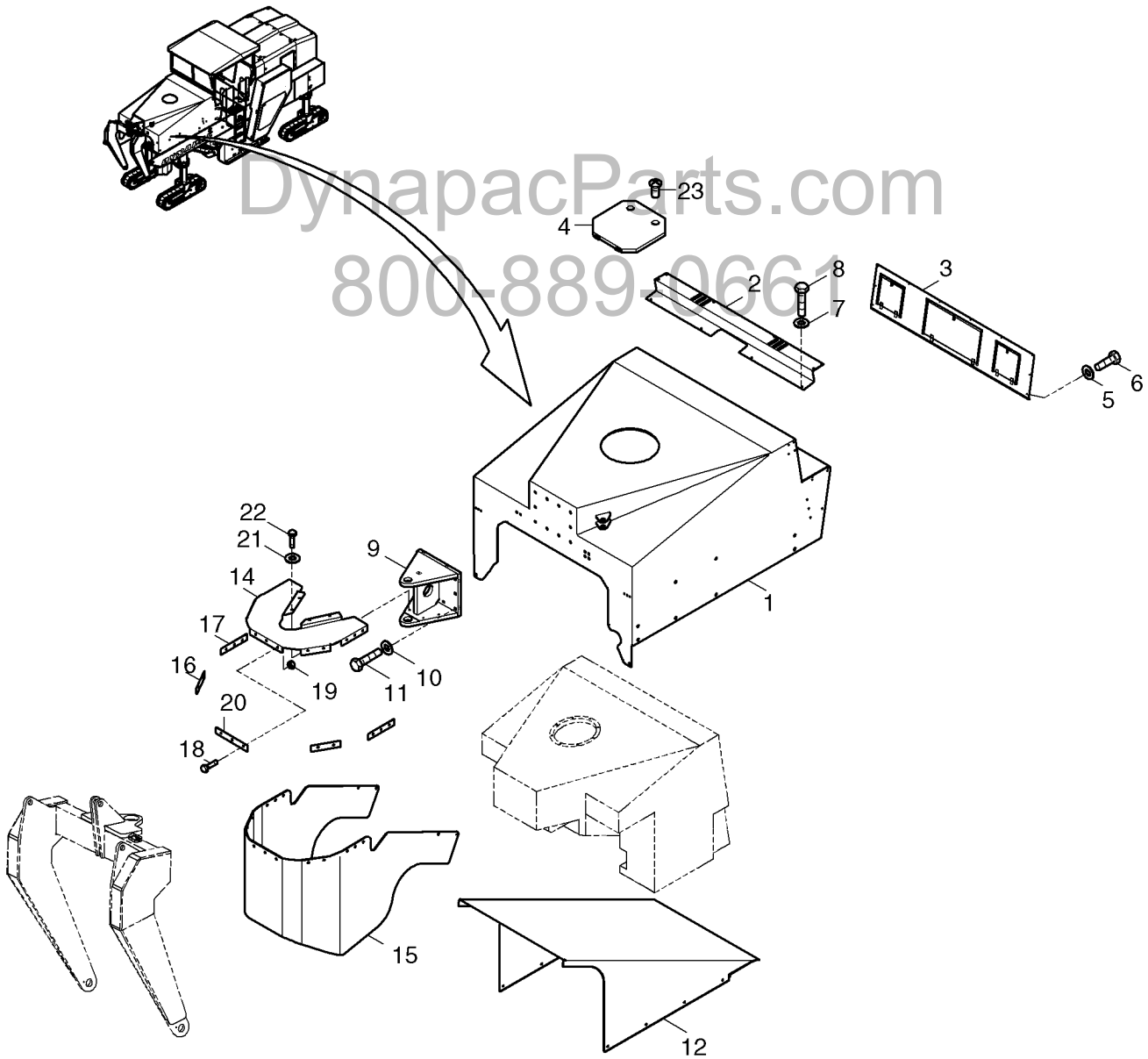

DynapacParts.com
800-889-0661

DynapacParts.com
800-889-0661

Pos. Item	Best.-Nr. Part No.	Anz. Qty.	Beschreibung Description	Bemerkung Note
		1	Hood, front Tank protection	
1	500010130	1	Hood, front	
2	500010740	1	Cover plate	
3	500010148	1	Cover plate	
4	500010447	1	Cover	
5	600006	10	Disc	
6	500019	10	Screw	
7	600004	6	Disc	
8	500012	6	Screw	
9	500010124	1	Bearing support	
10	600014	10	Disc	
11	938150984	10	Hex. screw	
12	500110222	1	Tank protection	
14	500030182	1	Holder plate	
15	500130119	1	Rubber	
16	500030192	2	Support, slanting	
17	500030185	2	Support, side	
18	500234	13	Screw	
19	570006	13	Nut	
20	500030184	1	Support, frontside	
21	600008	4	Disc	
22	500029	4	Hex. screw	
23	939143411	2	Screw	

DynapacParts.com
800-889-0661

DynapacParts.com
800-889-0661

Hood, front Tank protection **500-01210**

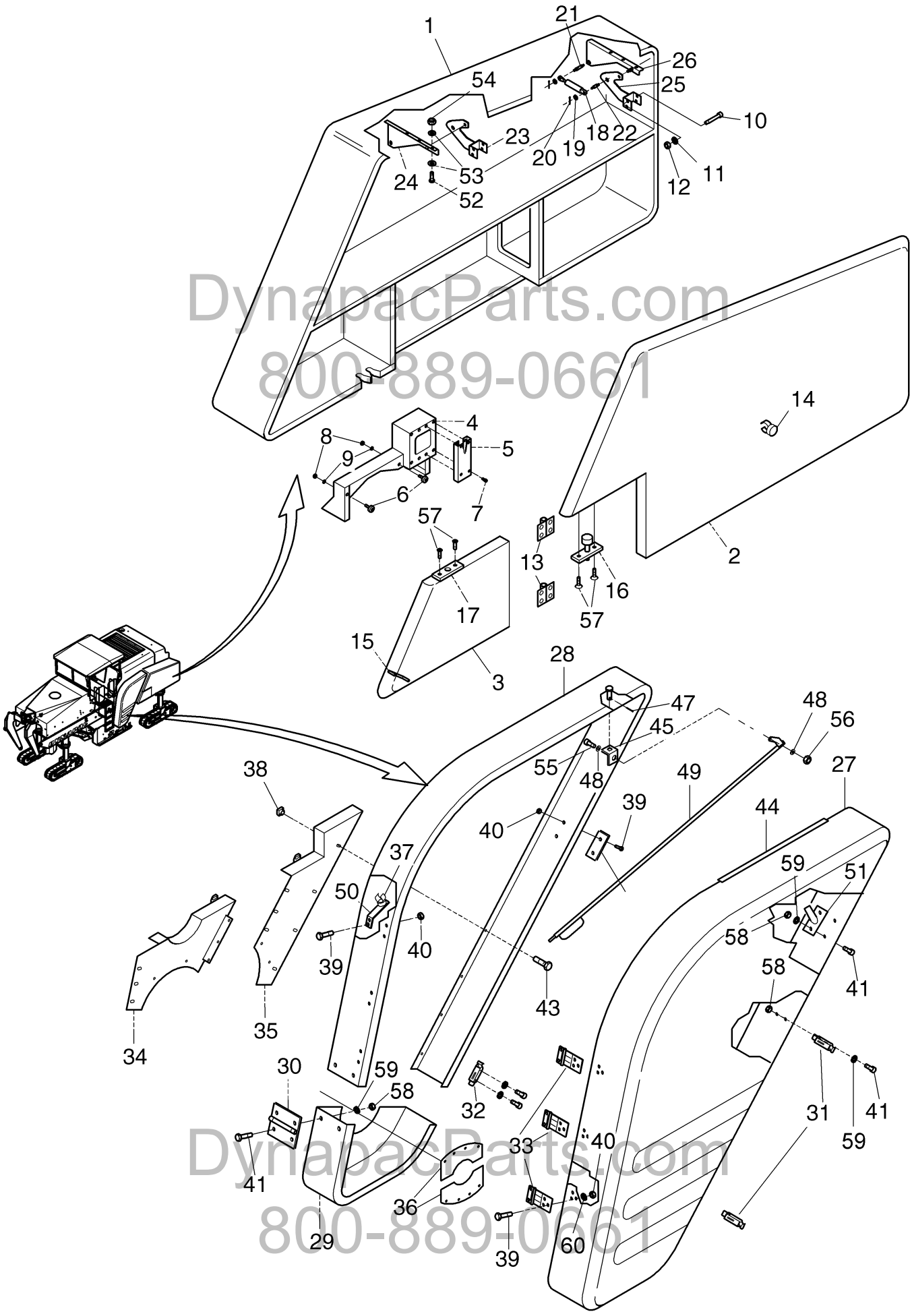

DynapacParts.com
800-889-0661

Pos. Item	Best.-Nr. Part No.	Anz. Qty.	Beschreibung Description	Bemerkung Note
			Accessories box, belt protection	
1	500210301	1	Accessories box	
2	500210323	1	Accessories box flap	
3	500210326	1	Flap for operate	
4	500210316	1	Console	
5	500100715	2	Steering holder	
6	930235247	2	Rubber buffer	
7	508025	8	Screw	
8	570004	2	Hex. nut	
9	600006	2	Disc	
10	938150559	4	Hex. screw	
11	600004	4	Disc	
12	938481006	4	Hex. nut	
13	930440067	2	Hinge	
14	953509712	1	Clip	
15	500210333	1	Holding pipe	
16	930404706	1	Stop bolt	
17	500210342	1	Bracket plate	
18	49302463	9	Pneumatic spring	
19	600006	10	Disc	
20	936790328	10	Split pin	
21	500210280	2	Sleeve, long	
22	500210279	2	Sleeve, short	
23	500210291	1	Hinge, front	
24	500210289	1	Receptacle	
25	500210292	1	Hinge, back	
26	500210286	1	Receptacle	
27	500210105	1	Belt box flap	
28	500210106	1	Frame	
29	500210164	1	Flap	
30	930440065	1	Hinge	
31	930435601	2	Turnbuckle	
32	930435600	1	Turnbuckle	
33	930440064	3	Hinge	
34	500210165	1	Rearwall 1	
35	500210167	1	Rearwall 2	
36	500210154	1	Protection ring	
37	953509712	1	Clip	
38	939756135	10	Nut	
39	500053	15	Screw	
40	570005	15	Nut	
41	500040	4	Screw	
42	500013	7	Screw	
43	500012	10	Screw	
44	930235493	1	Seal profile	X m
45	500210382	1	Angle	

DynapacParts.com
800-889-0661
DynapacParts.com
800-889-0661

Pos. Item	Best.-Nr. Part No.	Anz. Qty.	Beschreibung Description	Bemerkung Note
46	500210281	1	Bolt	
47	936790328	2	Split pin	
48	600006	2	Disc	
49	500210380	1	Safety rod for hood	
50	500210377	1	Holder	
51	500210374	1	Receptacle	
52	500053	6	Screw	
53	600006	12	Disc	
54	938480508	6	Safety nut	
55	500020	1	Hex. screw	
56	938480508	1	Safety nut	
57	500028	4	Screw	
58	953325022	11	Hex. nut	
59	936907011	11	Spring washer	
60	606020	9	Spring washer	

DynapacParts.com
800-889-0661

DynapacParts.com
800-889-0661

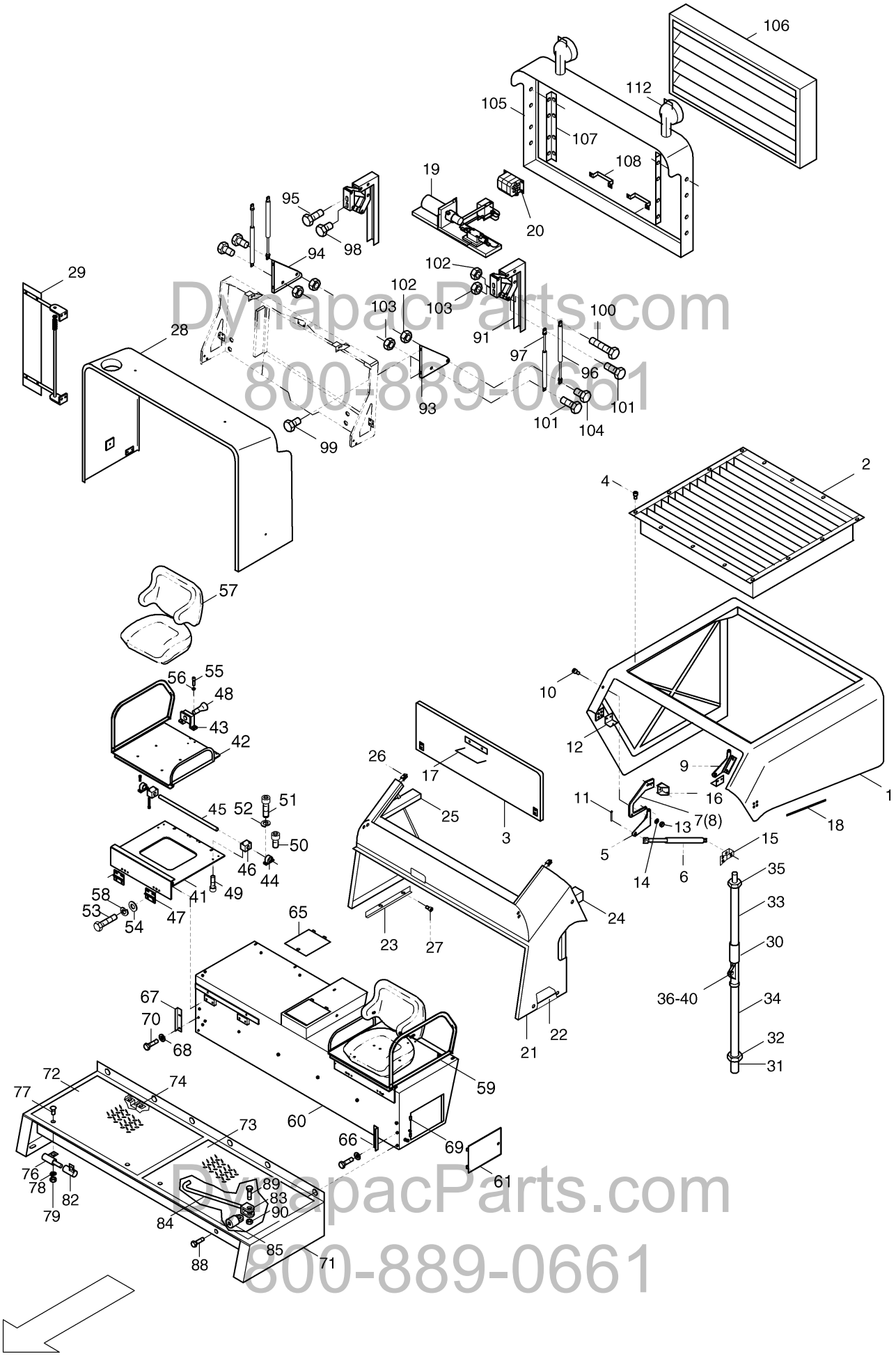

DynapacParts.com
800-889-0661

Pos. Item	Best.-Nr. Part No.	Anz. Qty.	Beschreibung Description	Bemerkung Note
			Engine hood	
1	500210109	1	Engine hood, middle	
2	500210590	1	Air exhaust	
3	500210110	1	Cover front	
4	939141711	14	Round head screw	
5	500210262	1	Bow, right	
6	930220842	2	Pneumatic spring	
7	500210263	1	Lever, right	
8	500210271	1	Lever, left	
9	500210270	1	Bow, left	
10	939142313	4	Round head screw	
11	63003	1	Split pin	
12	500210273	2	Angle	
13	570004	4	Hex. nut	
14	600004	4	Disc	
15	500300152	2	Bearing with axle	
16	500210264	2	Shoe	
17	930136772	1	Bow type handle	
18	930235493	1	Seal profile	X m
19	967120010	1	Hydraulic aggregat	
20	963081215	1	Flow divider	
21	500210177	1	Engine hood, front	
22	500210193	1	Angle, left	
23	500210194	1	Angle, right	
24	500210272	1	Bow, left	
25	500210274	1	Bow, right	
26	934804732	2	Fork head	
27	500019	13	Screw	
28	500210108	1	Engine hood, rear	
29	500-10110	1	**Accessories box, rear shank bite box**	
30	500210390	2	Sleeve	
31	500210392	2	Screw rod	
32	938190026	2	Hex. nut	
33	500210386	2	Safety rod, top	
34	500210387	2	Safety rod, below	
35	570008	2	Nut	
36	929832	2	Angle joint	
37	500210397	2	Distance bushing	
38	600009	4	Disc	
39	938500009	2	Safety nut	
40	500037	2	Hex. screw	
41	500010349	2	Console	
42	500010354	1	Seat support, right	
43	500010364	2	Holder	
44	930540810	4	Shaft bearing	
45	930381001	2	Precision shaft	

DynapacParts.com
800-889-0661
DynapacParts.com
800-889-0661

Pos. Item	Best.-Nr. Part No.	Anz. Qty.	Beschreibung Description	Bemerkung Note
46	930229370	4	Linear ball bearing	
47	722112922	2	Hinge	
48	930404706	2	Stop bolt	
49	938970178	8	Screw	
50	508001	8	Cylinder screw	
51	508025	8	Screw	
52	947886	24	Spring washer	
53	500048	12	Screw	
54	600008	12	Disc	
55	500019	4	Screw	
56	600008	4	Disc	
57	953420324	2	Drivers seat	
58	704130	8	Spring washer	
59	500010369	1	Seat support, left	
60	500110159	1	Tank covering	
61	500010251	1	Cover	
65	500010246	1	Tank flap	
66	500110163	1	Angle, left	
67	500110165	1	Angle, right	
68	939570514	4	Disc	
69		2	Distance washer	
70	500019	4	Screw	
71	500110118	1	Foot room	
72	500110153	1	Foot room flap, right	
73	500110141	1	Foot room flap, left	
74	930579800	2	Lock	
_01	956114040	1	_Punch key	
76	500110151	2	Hinge half	
77	939475168	4	Countersunk screw	
78	936905011	10	Spring washer	
79	570004	8	Hex. nut	
82	500110150	2	Hinge half	
83	934804416	2	Fork head	
84	500110156	2	Rod	
85	953509710	2	Clamp	
88	500053	2	Screw	
89	500012	2	Screw	
90	938480508	2	Safety nut	
91	500210465	2	Flap mechanic	
93	500210470	1	Support, right	
94	500210472	1	Support, left	
95	500161	4	Hex. screw	
96	930220811	2	Pneumatic spring	
97	930220812	2	Pneumatic spring	
98	500029	4	Hex. screw	
99	938165715	2	Screw	

DynapacParts.com
800-889-0661
DynapacParts.com
800-889-0661

Engine hood, foot room **500-01230**

Pos. Item	Best.-Nr. Part No.	Anz. Qty.	Beschreibung Description	Bemerkung Note
100	938165662	4	Hex. screw	
102	570006	10	Nut	
103	570005	12	Nut	
104	500234	2	Screw	
105	500210117	1	Frame for cooler	
106	500210118	1	Frame insert	
107	500210138	2	Support angle	
108	930136772	2	Bow type handle	
112	977900132	2	Working lamp	

DynapacParts.com
800-889-0661

DynapacParts.com
800-889-0661

Engine hood, foot room **500-01230**

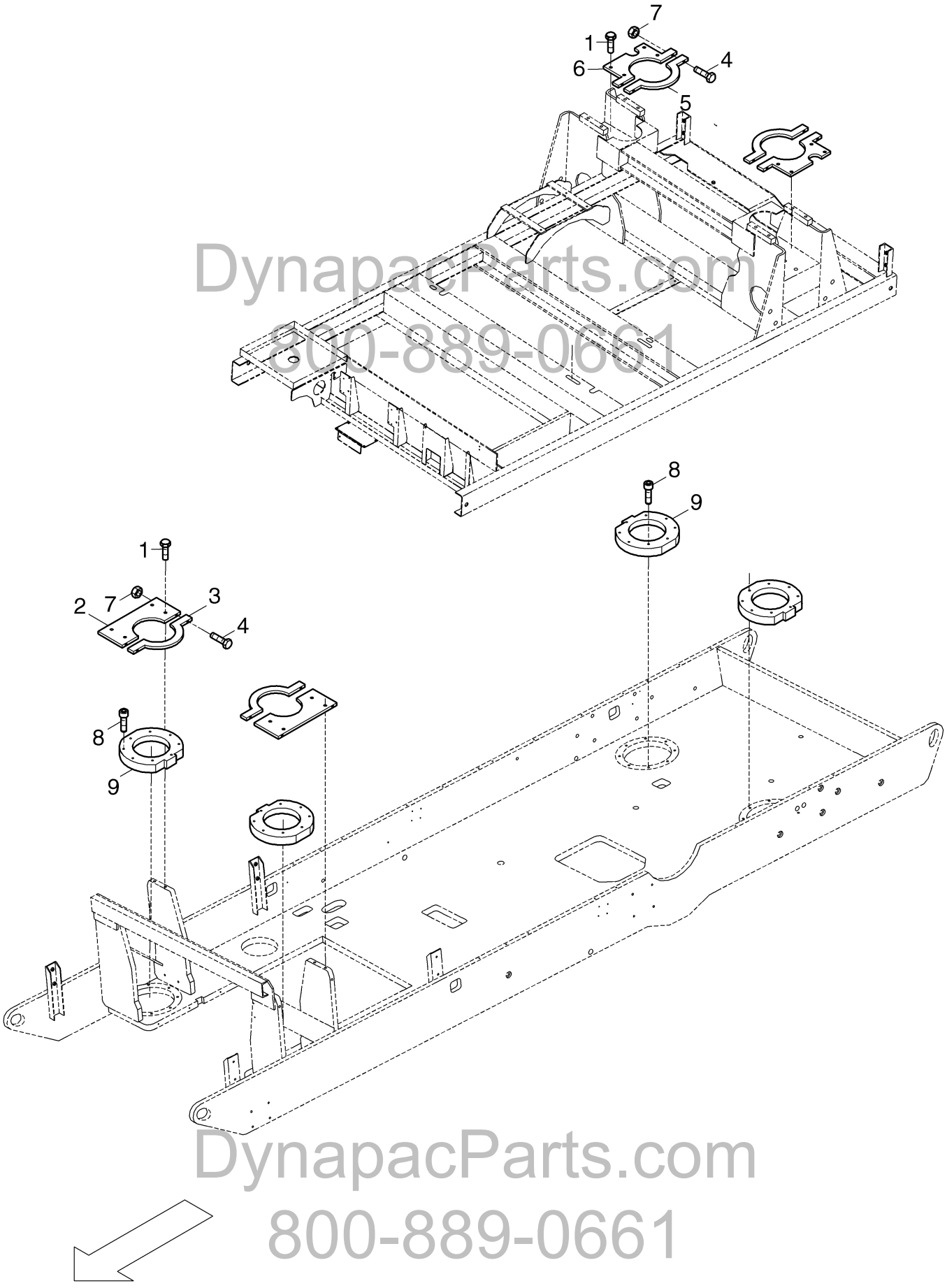

DynapacParts.com
800-889-0661

DynapacParts.com
800-889-0661

Pos. Item	Best.-Nr. Part No.	Anz. Qty.	Beschreibung Description	Bemerkung Note
			Mounting parts, Struttover	
1	938116940	16	Hex. screw	
2	500010118	1	Clip, front	
3	500010120	1	Clip, front	
4	938122175	8	Hex. screw	
5	500010121	1	Clip, back	
6	500010119	1	Clip, back	
7	938190524	16	Hex. nut	
8	937934603	40	Cylinder screw	
9	500010117	4	Flange	

DynapacParts.com
800-889-0661

DynapacParts.com
800-889-0661

DynapacParts.com
800-889-0661

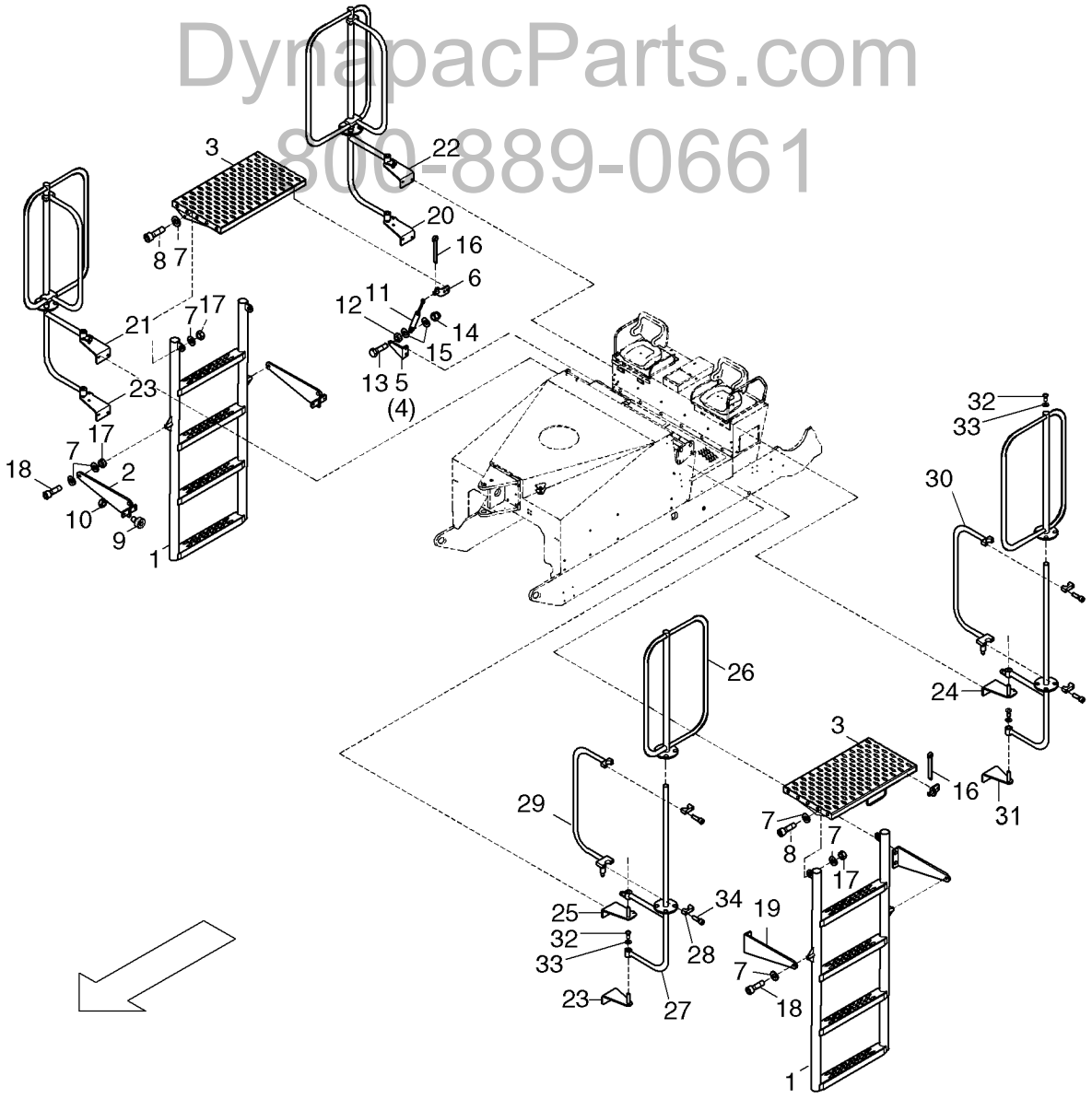

DynapacParts.com
800-889-0661

Pos. Item	Best.-Nr. Part No.	Anz. Qty.	Beschreibung Description	Bemerkung Note
			Drivers step, safety rail	
1	500010618	2	Step	
2	500010624	2	Support plate	
3	500010627	2	Safety step	
4	500010629	1	Gas spring holder, left	
5	500010631	1	Gas spring holder, right	
6	500010632	6	Holder	
7	600009	10	Disc	
8	508031	10	Screw	
9	930235260	4	Rubber buffer	
10	937180512	4	Nut	
11	49302463	2	Pneumatic spring	
12	570005	4	Nut	
13	500009	4	Hex. screw	
14	938760007	4	Cap nut	
15	600006	8	Disc	
16	936790599	6	Split pin	
17	937180513	4	Nut	
18	928791	2	Cylinder screw	
19	500010690	2	Support plate	
20	500110771	1	Holder, lower, rear right	
21	500110172	1	Holder, top, front right	
22	500110173	1	Holder, top, rear right	
23	500110174	2	Holder, lower front	
24	500110175	1	Holder, top, rear left	
25	500110176	1	Holder, top, front left	
26	500110170	4	Hand rail	
27	500110168	4	Rail holder	
28	500010681	8	Clip 2	
29	500110185	2	Hand rail	
30	500110192	2	Hand rail	
31	500110206	1	Holder, lower, rear left	
32	939140511	12	Screw	
33	939570516	12	Lower washer	
34	937930227	16	Screw	

DynapacParts.com
800-889-0661

DynapacParts.com
800-889-0661

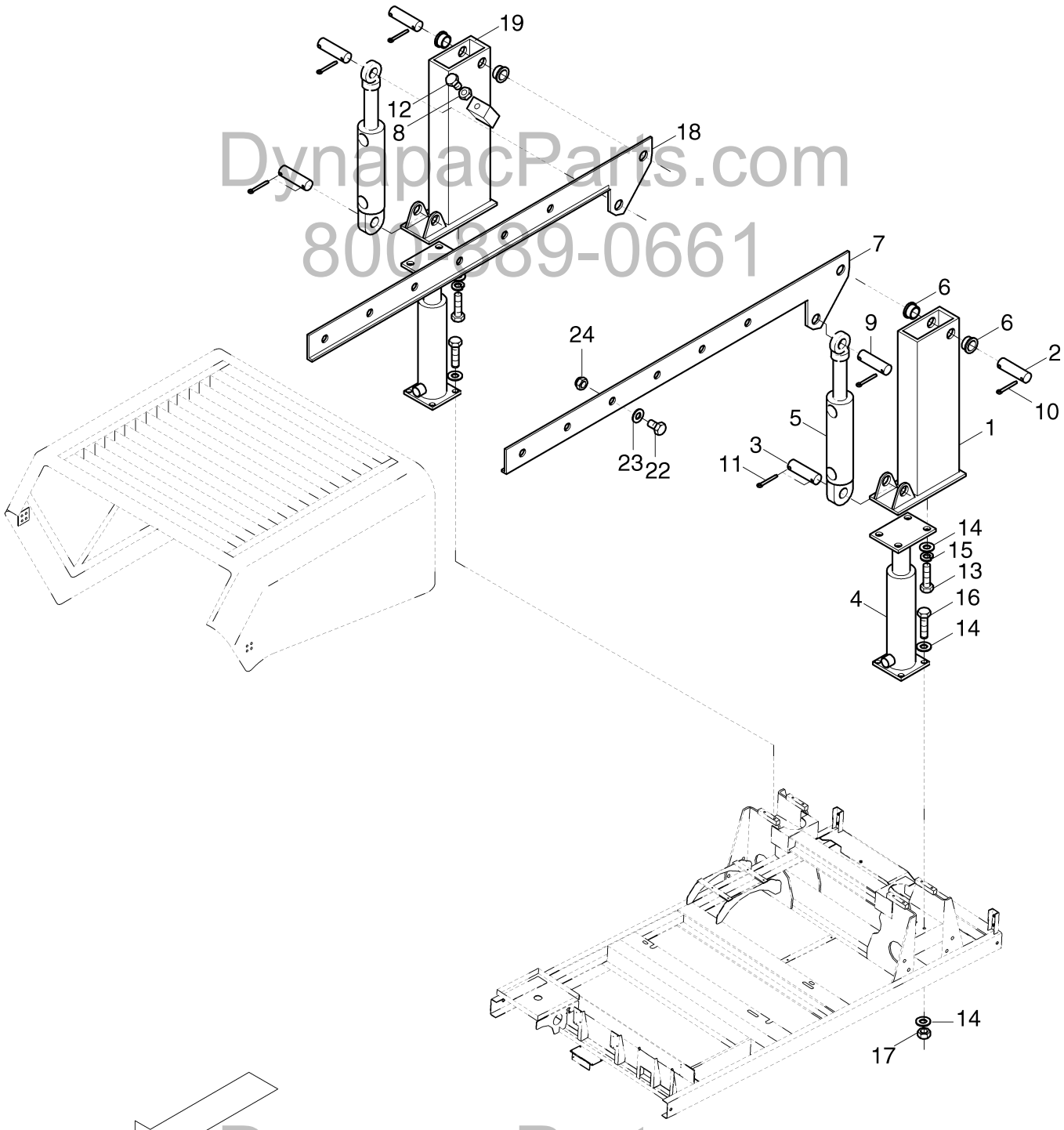

DynapacParts.com
800-889-0661

DynapacParts.com
800-889-0661

Pos. Item	Best.-Nr. Part No.	Anz. Qty.	Beschreibung Description	Bemerkung Note
1	500210443	1	Support, left	
2	500210445	2	Bolt	
3	500210455	2	Bolt	
4	965172913	2	Hydraulic cylinder	
_01	932783902	1	_Sealing kit	
5	965080267	2	Hydraulic cylinder	
_01	932783901	1	_Sealing kit	
6	930136830	4	Collar bushing	
7	500210453	1	Support arm, left	
8	570015	2	Hex. nut	
9	500210449	2	Bolt	
10	630028	4	Split pin	
11	936790545	6	Split pin	
12	938150984	2	Hex. screw	
13	500037	8	Hex. screw	
14	600009	24	Disc	
15	936905020	8	Spring washer	
16	500194	8	Hex. screw	
17	938500009	8	Safety nut	
18	500210442	1	Support arm, right	
19	500210483	1	Support, right	
22	500029	12	Hex. screw	
23	600008	12	Disc	
24	938500008	12	Nut	

DynapacParts.com
800-889-0661

DynapacParts.com
800-889-0661

Pos. Item	Best.-Nr. Part No.	Anz. Qty.	Beschreibung Description	Bemerkung Note
	500-02110		**Cutting drum housing,side plates,spray system**	
	500-02120		**Side shields, compl.**	
	500-02130B		**Tension lever, Cutting drum**	

DynapacParts.com
800-889-0661

DynapacParts.com
800-889-0661

Planer unit

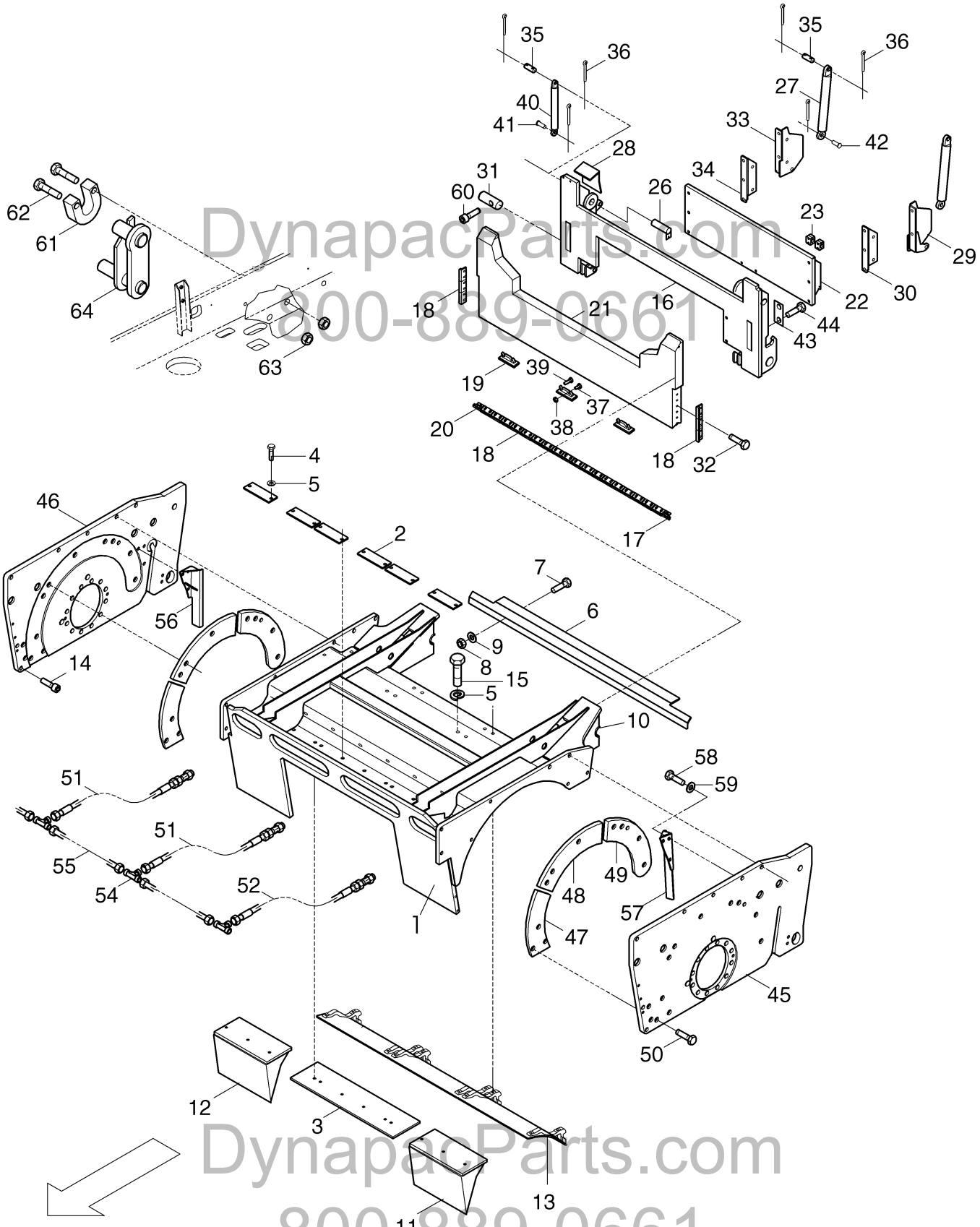

DynapacParts.com
800-889-0661

DynapacParts.com
800-889-0661

Pos. Item	Best.-Nr. Part No.	Anz. Qty.	Beschreibung Description	Bemerkung Note
			Cutting drum housing,side plates,spray system	
1	500120214	1	Milling housing	
2	500020169	6	Base	
3	500120209	1	Baffle plate, middle	
4	500093	12	Hex. screw	
5	939505037	24	Lock disc	
6	500020175	1	Sealing strip	
7	500037	6	Hex. screw	
8	570007	6	Hex. nut	
9	600009	6	Disc	
10	930136726	2	Bushing	
11	500120213	1	Side baffle plate, left	
12	500120212	1	Side baffle plate, right	
13	500100254	3	Planer box lining	
14	937934919	2	Screw	
15	500057	12	Screw	
16	500120121	1	Scraper	
17	500120111	1	Blade, right	
18	930520342	24	Scraper	
19	500100241	3	Support	
20	500120112	1	Blade, left	
21	500020160	1	Ejector flap	
22	500120183	1	Scraper flap	
23	934364022	4	Clip	
24	939122268	2	Clamping pin	
25	500020163	2	Support tongue	
26	500020273	2	Bolt	
27	965080259	2	Cylinder	
_01	690207	1	_Sealing kit	
28	500020299	2	Protection plate	
29	500020278	1	Cylinder console	
30	500020279	1	Connection plate, left	
31	500020237	2	Support bolt	
32	939786660	52	Tensilock-screw	
33	500020274	1	Cylinder console, right	
34	500020275	1	Connection plate, right	
35	990020297	4	Bolt	
36	630018	4	Split pin	
37	500037	3	Hex. screw	
38	570007	3	Hex. nut	
39	939786930	6	Hex. screw	
40	965080258	2	Hydraulic cylinder	
_01	932780254	1	_Sealing kit	
41	990020297	2	Bolt	

DynapacParts.com
800-889-0661
DynapacParts.com
800-889-0661

Pos. Item	Best.-Nr. Part No.	Anz. Qty.	Beschreibung Description	Bemerkung Note
42	990020290	2	Bolt	
43	500020163	2	Support tongue	
44	938111939	8	Screw	
45	500120131	1	Side shield, left	
46	500120133	1	Side shield, right	
47	500020214	2	Wear part	
48	500020215	2	Wear part	
49	500020216	2	Wear part	
50	939786935	22	Screw	
51	500020332	6	Hose, compl. with nozzle	
+	930177505	6	Jet	1,0 mm
+	960831069	6	Hose	
+	930506060	6	Union nut	
52	500020333	2	Hose, compl. with nozzle	
+	930177507	2	Jet	2,5 mm
+	960831069	2	Hose	
+	930506060	2	Union nut	
54	961982616	6	Union tee	
55	500020319	6	Pipeline	
56	500020194	1	Guide, right	
57	500020213	1	Guide, left	
58	937932493	6	Screw	
59	600011	6	Disc	
60	937932616	2	Screw	
61	500010345	1	Bearing	
62	500094	2	Hex. screw	
63	570008	2	Nut	
64	500010341	1	Scraper flap guard	

+) Available as single part / Not shown with own item no.

DynapacParts.com
800-889-0661

DynapacParts.com
800-889-0661

Cutting drum housing,side plates,spray system **500-02110**

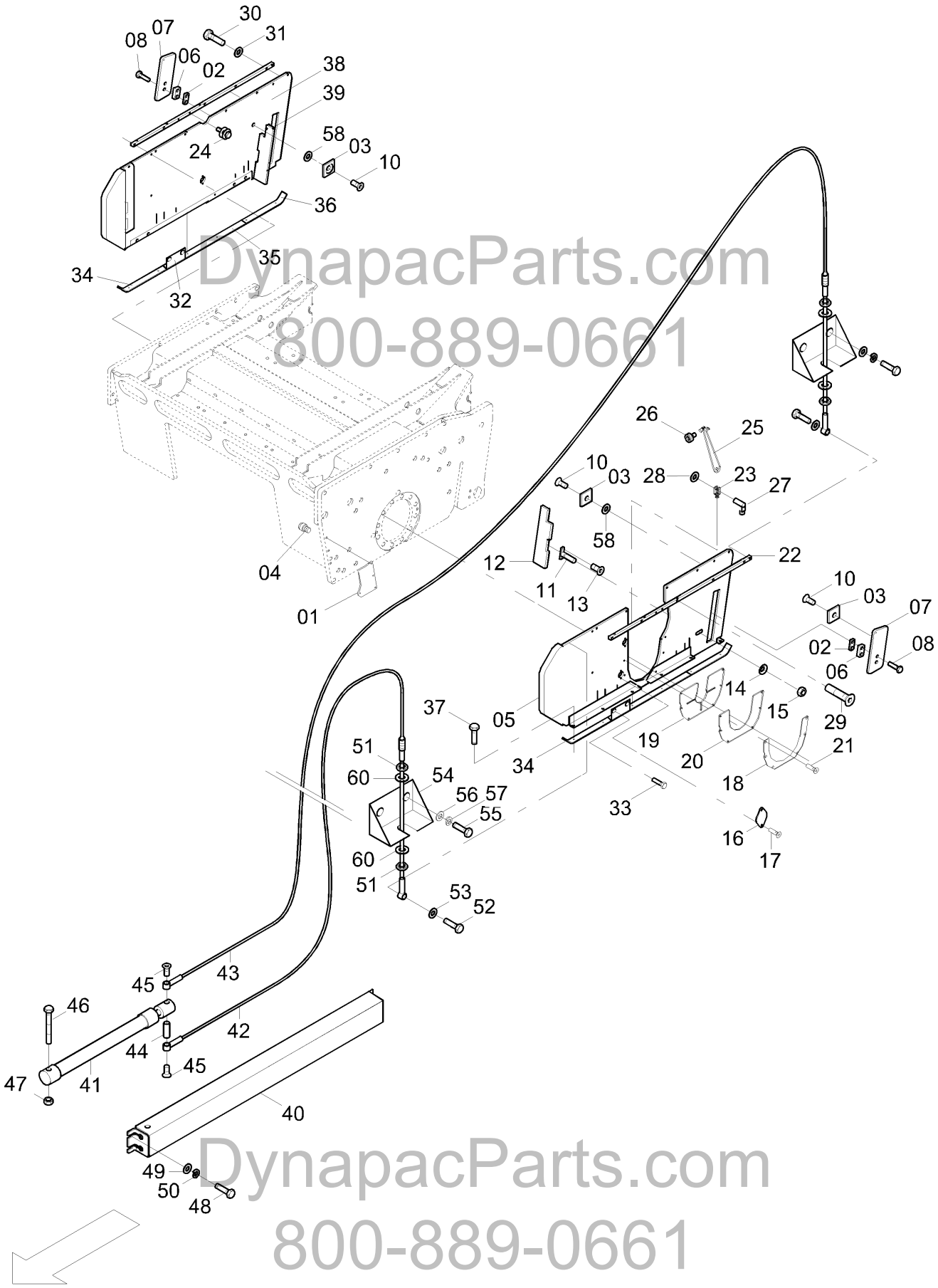

DynapacParts.com
800-889-0661

DynapacParts.com
800-889-0661

Pos. Item	Best.-Nr. Part No.	Anz. Qty.	Beschreibung Description	Bemerkung Note
			Side shields, compl.	
1	500120234	2	Guide plate	
2	500020321	2	Distance piece	
3	725180957	2	Support plate	
4	938155766	6	Screw	
5	500120230	1	Side shield, left	
6	500020192	2	Gate	
7	500120164	2	Guide plate	
8	938111943	4	Hex. screw	
10	939475275	14	Screw	
11	500120156	2	Flange screw	
12	500120159	1	Sealing strip	
13	939470437	4	Countersunk screw	
14	932801010	2	Cup spring	
15	938500015	2	Nut	
16	500020282	3	Seal plate	
17	665821	5	Countersunk screw	
18	500020281	1	Covering	
19	500020283	1	Covering	
20	500020284	1	Sealing	
21	939470223	1	Countersunk screw	
22	500020264	1	Holder	
23	934804624	1	Fork head	
24	500020271	2	Clamp screw, compl.	
25	500020326	2	Support latch	
26	930235249	2	Rubber buffer	
27	931600654	2	Bolt	
28	600009	2	Disc	
29	939470331	8	Screw	
30	500194	12	Hex. screw	
31	600009	10	Disc	
32	500120231	4	Sliding rail	
33	939786935	8	Screw	
34	500100247	2	Ski, front	
35	500100245	2	Intermedia ski	
36	500100246	2	Ski, rear	
37	500163	12	Hex. screw	
38	500120194	1	Side shield, right	
39	500120150	1	Sealing strip	
40	500120186	2	Cylinder box	
41	965155700	2	Hydraulic cylinder	
_01	932785694	1	_Sealing kit	
42	951106718	2	Brake wire	1770 mm
43	951106719	2	Brake wire	3520 mm
44	500120190	2	Bolt	
45	939475221	4	Screw	

DynapacParts.com
800-889-0661
DynapacParts.com
800-889-0661

Side shields, compl. **500-02120**

Pos. Item	Best.-Nr. Part No.	Anz. Qty.	Beschreibung Description	Bemerkung Note
46	938150776	2	Hex. screw	
47	938500009	2	Safety nut	
48	500027	2	Hex. screw	
49	600008	2	Disc	
50	704130	2	Spring washer	
51	934803624	8	Fork head	
52	500193	4	Screw	
53	600009	4	Disc	
54	500020272	4	Angle	
55	500021	8	Screw	
56	600006	8	Disc	
57	49900161	8	Screw retention	
58	600009	8	Disc	
60	600017	8	Disc	

DynapacParts.com
800-889-0661

DynapacParts.com
800-889-0661

Side shields, compl. **500-02120**

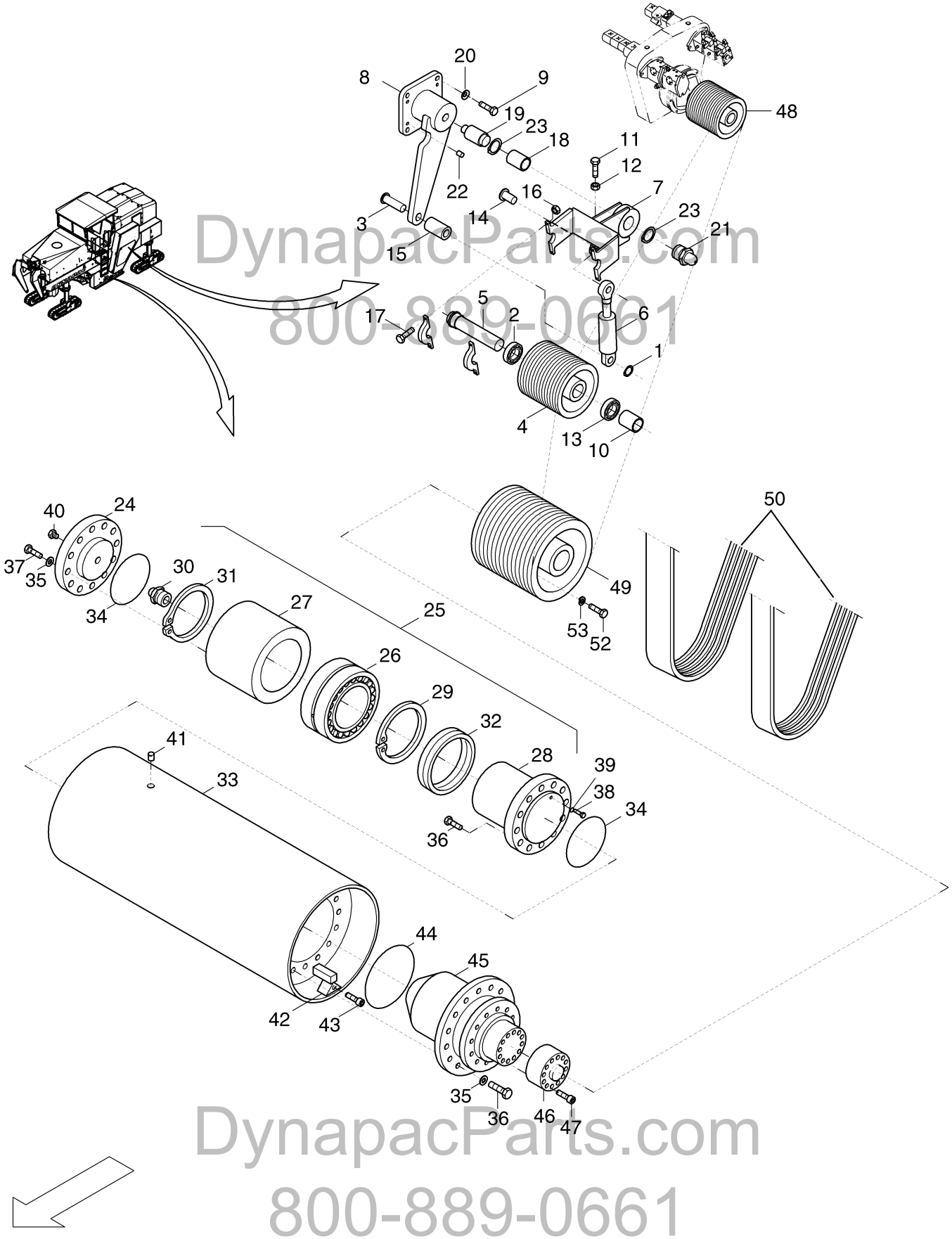

DynapacParts.com
800-889-0661

DynapacParts.com
800-889-0661

Pos. Item		Best.-Nr. Part No.	Anz. Qty.	Beschreibung Description	Bemerkung Note
				Tension lever, Cutting drum	
1		936002194	2	Circlip	
2		935005006	1	Roller bearing	
3		500120147	1	Bolt	
4		500020117	1	Tension roller	
5		500120143	1	Bolt	
6		965080257	1	Cylinder	
_01		932785695	1	_Sealing kit	
7		500120142	1	Tension lever	
8		500120145	1	Lever	
9		938166982	4	Hex. screw	
10		500020228	1	Distance holder	
11		938150772	1	Hex. screw	
12		570007	1	Hex. nut	
13		935005005	1	Roller bearing	
14		500120151	1	Bolt compl.	
15		500120144	1	Distance pipe	
16		570005	2	Nut	
17		500138	2	Hex. screw	
18		500020328	1	Bushing	
19		500120247	1	Bolt	
20		939515040	4	Locking element	
21		935511212	1	Grease nipple	
22		500020209	4	Threaded pin	
23		936003850	2	Snap ring	
24		500020102	1	Flange	
25		500020104	1	Cutter bearing, right	
26	*	935225780	1	Carb bearing	
27	*	500020101	1	Bearing housing	
28	*	500020103	1	Axle	
29	*	931810149	1	Snap ring	
30	*	935511210	1	Grease nipple	
31	*	936008432	1	Snap ring	
32	*	930229411	1	Sealing glid ring	
33		930460244	1	Cutting drum	2100 mm
	#	500-10120		**Quick disconnect holder**	Bingham
	#	500-10121		**Quick disconnect holder**	Kennametall
34		932211818	1	O-ring	
35		939515040	56	Locking element	
36		500101	44	Screw	
37		938336178	12	Hex. screw	
38		500043	1	Screw	
39		932702317	1	Cu-seal ring	
40		937862264	1	Plug screw	

DynapacParts.com
800-889-0661
DynapacParts.com
800-889-0661

#) Alternatively delivery - substitution for

*) Available as single part

Pos. Item	Best.-Nr. Part No.	Anz. Qty.	Beschreibung Description	Bemerkung Note
41	937869807	2	Plug screw	
42	500020247	2	Control cover	
43	937932600	2	Hex. screw	
44	932455681	1	O-ring	
45	951056556	1	**Planetary gear**	
46	500120153	1	Intermediate piece	
47	508034	12	Screw	
48	902029756	1	Pulley	
49	902029755	1	Pulley	
50	930294985	1	Set of belts	(2x5, 1x4)
52	939776059	12	Screw	
53		12	Spring washer	

DynapacParts.com
800-889-0661

DynapacParts.com
800-889-0661

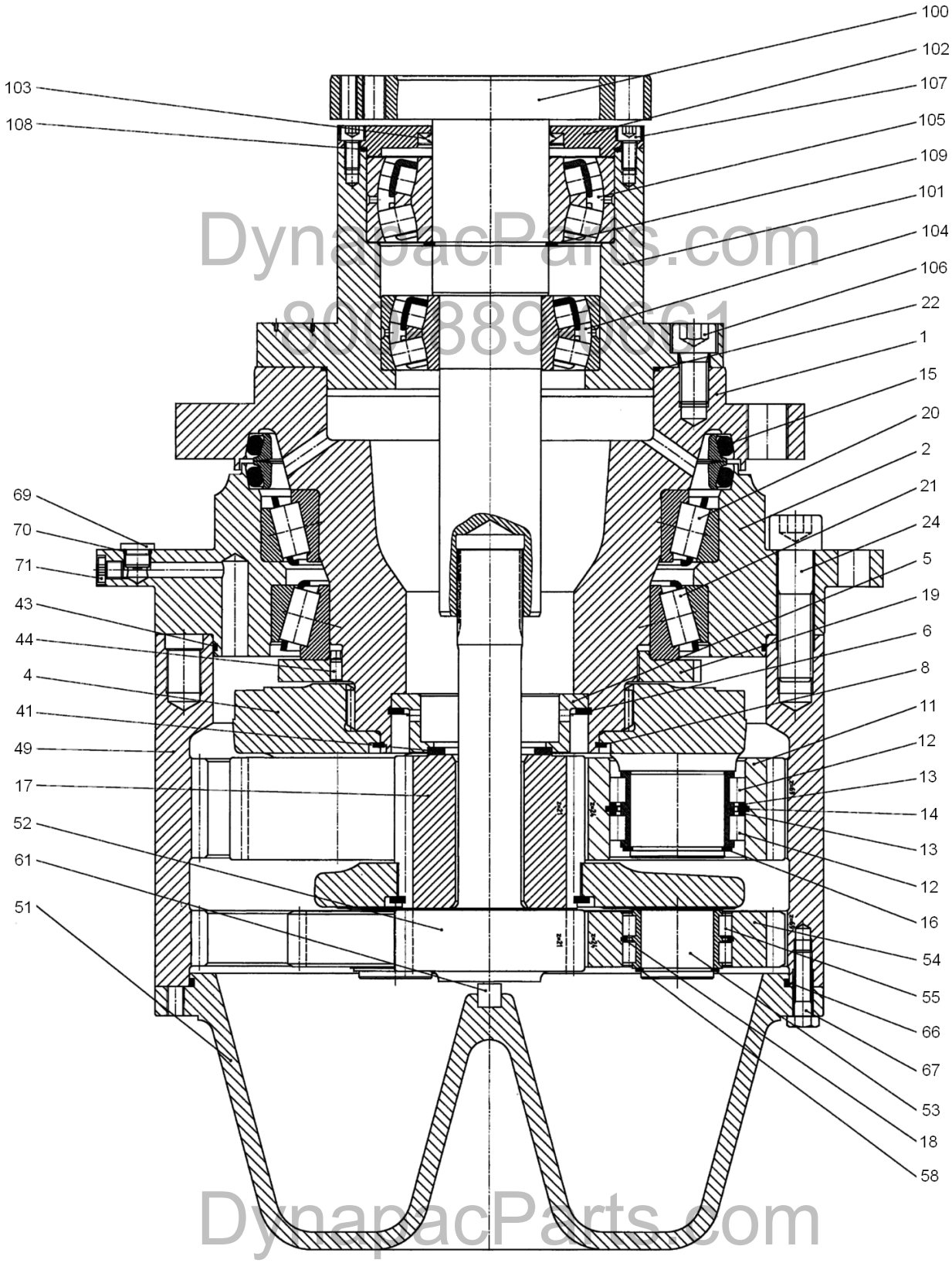

DynapacParts.com
800-889-0661

Pos. Item	Best.-Nr. Part No.	Anz. Qty.	Beschreibung Description	Bemerkung Note
	951056556	1	**Planetary gear**	
1	951078232	1	Spindle	
2	951075515	1	Supporting washer	
4	951057221	1	Planetary carrier	
5	951040741	1	Bearing ring	
6	951065519	1	Circlip	
8	931820135	1	Circlip	
11	951057228	5	Planetaryring	
12	951095935	10	Cylinder roller bearing	
13	951002187	10	Stop washer	
14	49901332	5	Circlip	
15	951026092	1	Sealing glid ring	
16	936031179	5	Circlip ring	
17	951066015	1	Sun gear	
18	936007772	1	Circlip	
19	951089113	1	Shaft nut	
20	951036107	1	Taper roller bearing	
21	951036108	1	Taper roller bearing	
22	932211829	1	Shaft sealing ring	
24	937938496	22	Cylinder screw	
41	935115911	1	Housing disc	
43	951053020	1	O-ring	
44	951098225	2	Plain pin	
49	951029614	1	Hollow wheel	
51	951012918	1	Cover	
52	951066273	1	Sun gear shaft	
53	951057222	1	Planetary carrier	
54	951057429	3	Planetary wheel	
55	951095936	3	Cylinder roller bearing	
58	936003190	3	Circlip ring	
61	951095929	1	Cylindrical roller	
66	951053019	1	O-ring	
67	500056	12	Hex. screw	
69	951084722	2	Plug screw	
70	951053020	2	O-ring	
71	951084723	2	Plug screw	
100	951088842	1	Shaft	
101	951040732	1	Bearing cover	
102	951012919	1	Cover	
103	951062517	1	Radial seal	
104	935235922	1	Pendulum roller bearing	
105	935235923	1	Pendulum roller bearing	
106	937932599	4	Cylinder screw	
107	49900361	4	Screw	
108	951053023	1	Sealing	
109	951065520	1	Circlip	

DynapacParts.com
800-889-0661
DynapacParts.com
800-889-0661

Pos. Item	Best.-Nr. Part No.	Anz. Qty.	Beschreibung Description	Bemerkung Note

24.10.2006

DynapacParts.com
800-889-0661

DynapacParts.com
800-889-0661

Planetary gear **951056556**

Pos. Item	Best.-Nr. Part No.	Anz. Qty.	Beschreibung Description	Bemerkung Note
	500-03110	1	**Sliding shoe**	
	500-03120	1	**Hoist arr., swivel unit**	
	500-03130	1	**Collating conveyor**	
	500-03140	1	**Collating conveyor**	
	500-03150	1	**Conveyor**	

DynapacParts.com
800-889-0661

DynapacParts.com
800-889-0661

Material feeder (rigid)

DynapacParts.com
800-889-0661

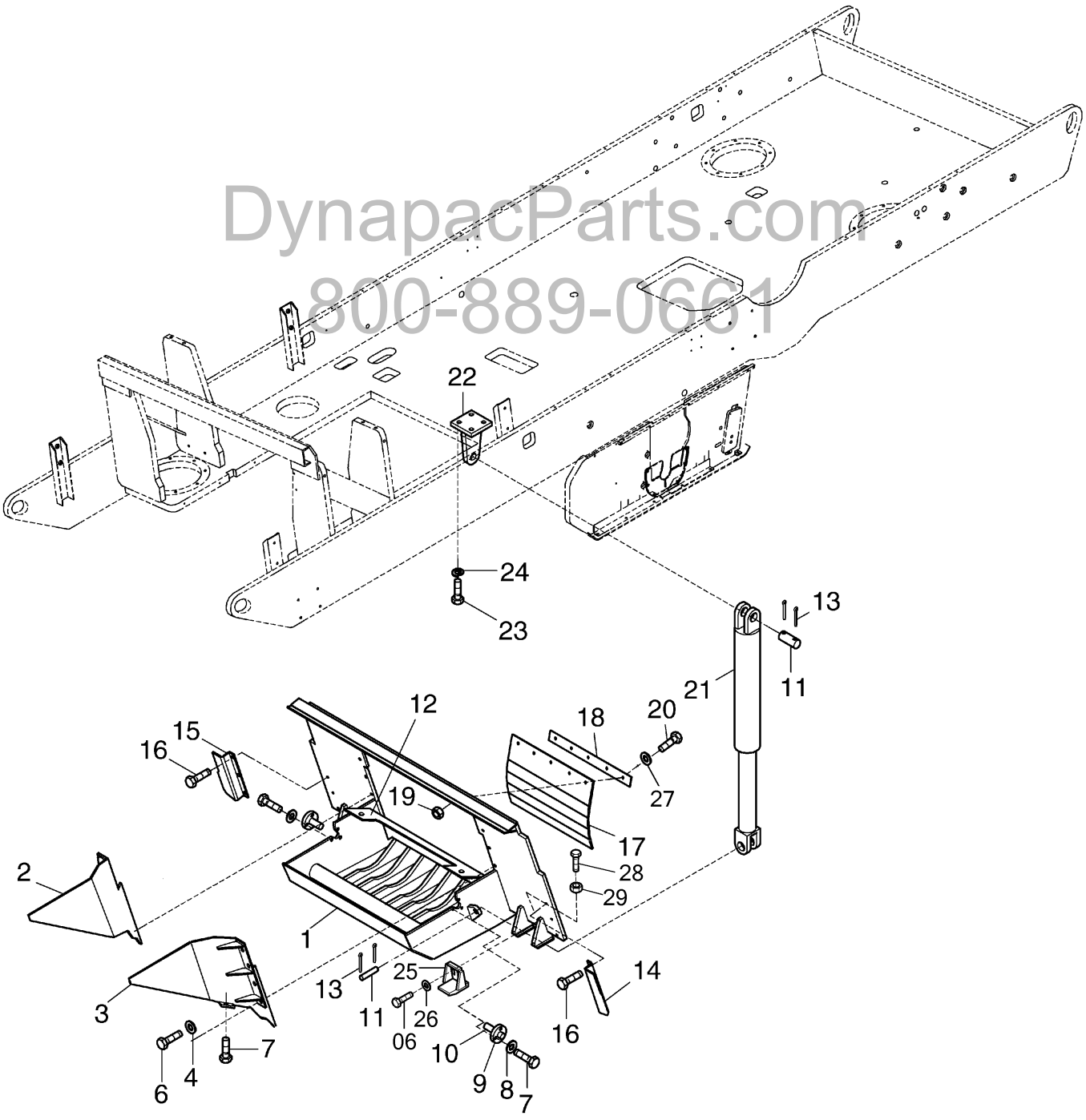

DynapacParts.com
800-889-0661

Pos. Item	Best.-Nr. Part No.	Anz. Qty.	Beschreibung Description	Bemerkung Note
1	500130102	1	Sliding shoe	
2	500130115	1	Wing, right	
3	500130116	1	Wing, left	
4	600011	8	Disc	
5	500030140	1	Supporting surface	
6	500123	17	Screw	
7	500193	6	Screw	
8	600009	6	Disc	
9	500030141	2	Bearing disc	
10	500030142	2	Bearing shaft	
11	750450046	4	Bolt	
12	500130114	1	Guide, compl.	
13	936790709	8	Split pin	
14	500230108	1	Baffle, left	
15	500230107	1	Baffle, right	
16	938116513	6	Hex. screw	
17	500130127	1	Wiper rubber	
18	500130128	1	Clamping strip	
19	570006	5	Nut	
20	938165712	5	Hex. screw	
21	965051388	2	Hydraulic cylinder	
_01	679534	1	_Sealing kit	
22	500010714	2	Strip for guide shoe	
23	500037	8	Hex. screw	
24	600009	8	Disc	
25	500100297	2	Slide bar	
26	939130018	4	Lower washer	
27	600008	5	Disc	
28	938165874	2	Hex. screw	
29	938190520	2	Nut	

DynapacParts.com
800-889-0661

DynapacParts.com
800-889-0661

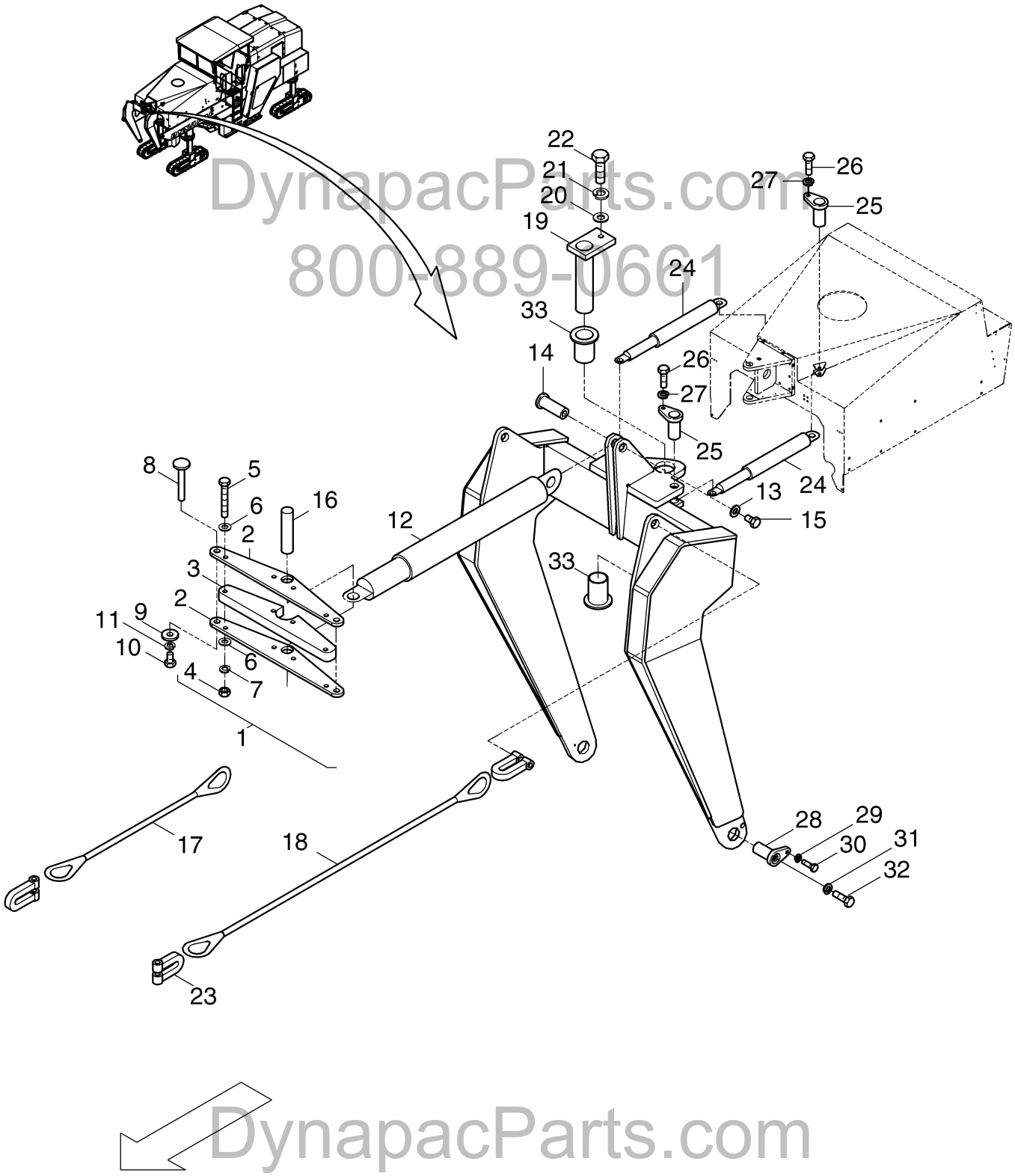

DynapacParts.com
800-889-0661

DynapacParts.com
800-889-0661

Pos. Item		Best.-Nr. Part No.	Anz. Qty.	Beschreibung Description	Bemerkung Note
1		500030152	1	Balance unit, compl.	
2	*	500030154	2	Outside plate	
3	*	500030153	1	Intermedia plate	
4	*	570008	4	Nut	
5	*	938111728	4	Hex. screw	
6	*	600011	8	Disc	
7	*	936905026	4	Spring washer	
8		500030158	2	Bolt	
9		500030159	2	Disc	
10		500027	2	Hex. screw	
11		704130	2	Spring washer	
12		965080254	1	Hydraulic cylinder	1030 mm
_01		932785696	1	_Sealing kit	
13		500030155	1	Disc	
14		500030156	1	Bolt	
15		938111386	1	Hex. screw	
16		500030157	1	Bolt	
17		930143000	2	CS-rope	1480 mm
18		930143001	2	CS-rope	3250 mm
19		500030150	1	Bolt	
20		600008	1	Disc	
21		704130	1	Spring washer	
22		938111390	1	Hex. screw	
23		930440023	6	Clevis	
24		965080253	2	Hydraulic cylinder	
_01		932785695	1	_Sealing kit	
25		500030143	4	Bolt	
26		500014	4	Hex. screw	
27		600004	4	Disc	
28		500030116	2	Bolt	
29		704130	2	Spring washer	
30		500028	2	Screw	
31		936905020	2	Spring washer	
32		500035	2	Hex. screw	
33		930229369	2	Bushing	

*) Available as single part

DynapacParts.com
800-889-0661

DynapacParts.com
800-889-0661

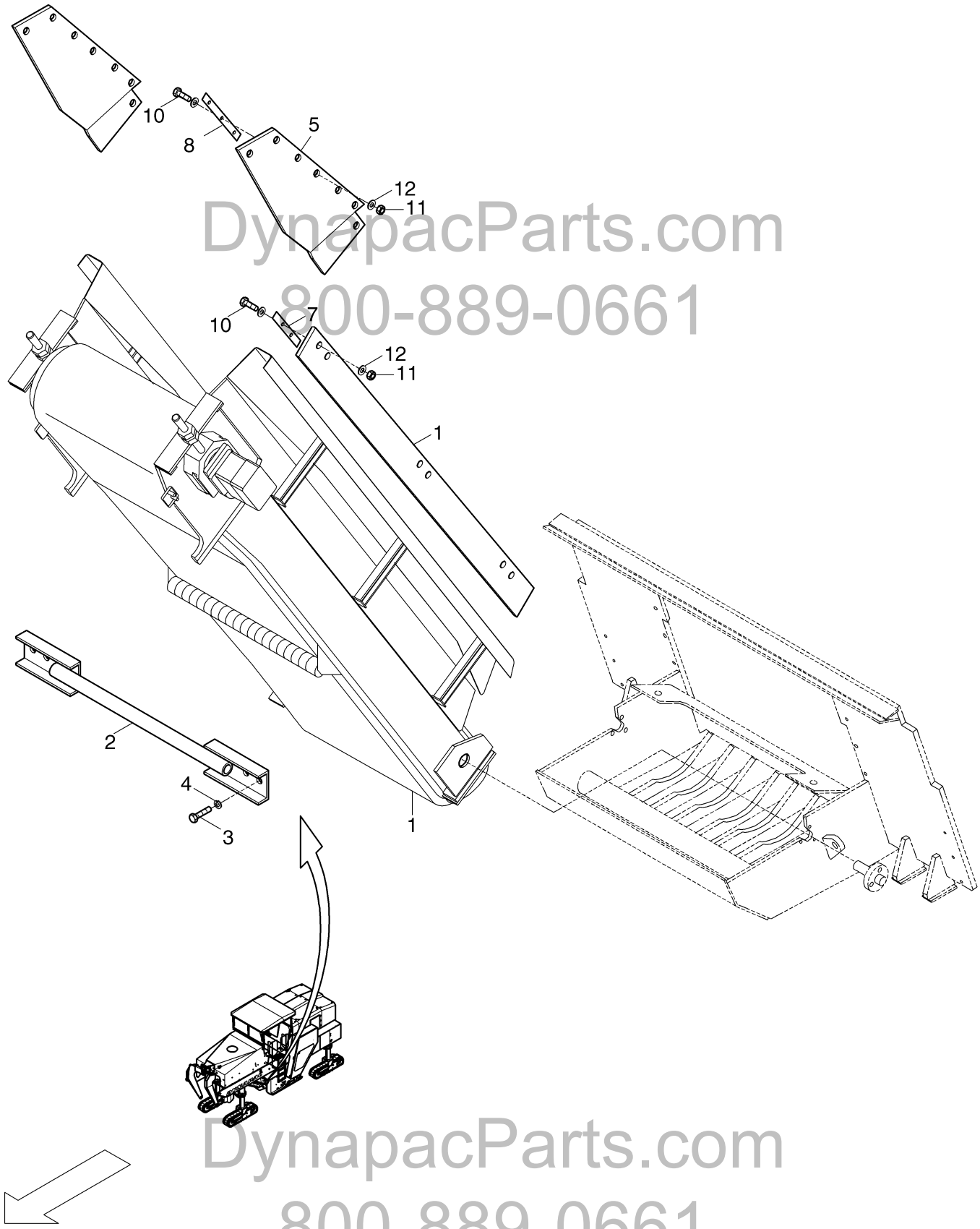

DynapacParts.com
800-889-0661

DynapacParts.com
800-889-0661

Pos. Item		Best.-Nr. Part No.	Anz. Qty.	Beschreibung Description	Bemerkung Note
1		500-03140	1	**Collating conveyor**	
2		500010746	1	Crossbar	
3	*	500057	8	Screw	
4	*	936905026	8	Spring washer	
5	*	500130121	2	Lower sealing	
7		500130123	6	Holder	
8		500130124	2	Holder	
10		500020	30	Hex. screw	
11		570005	30	Nut	
12		600006	60	Disc	

*) Available as single part

DynapacParts.com
800-889-0661

DynapacParts.com
800-889-0661

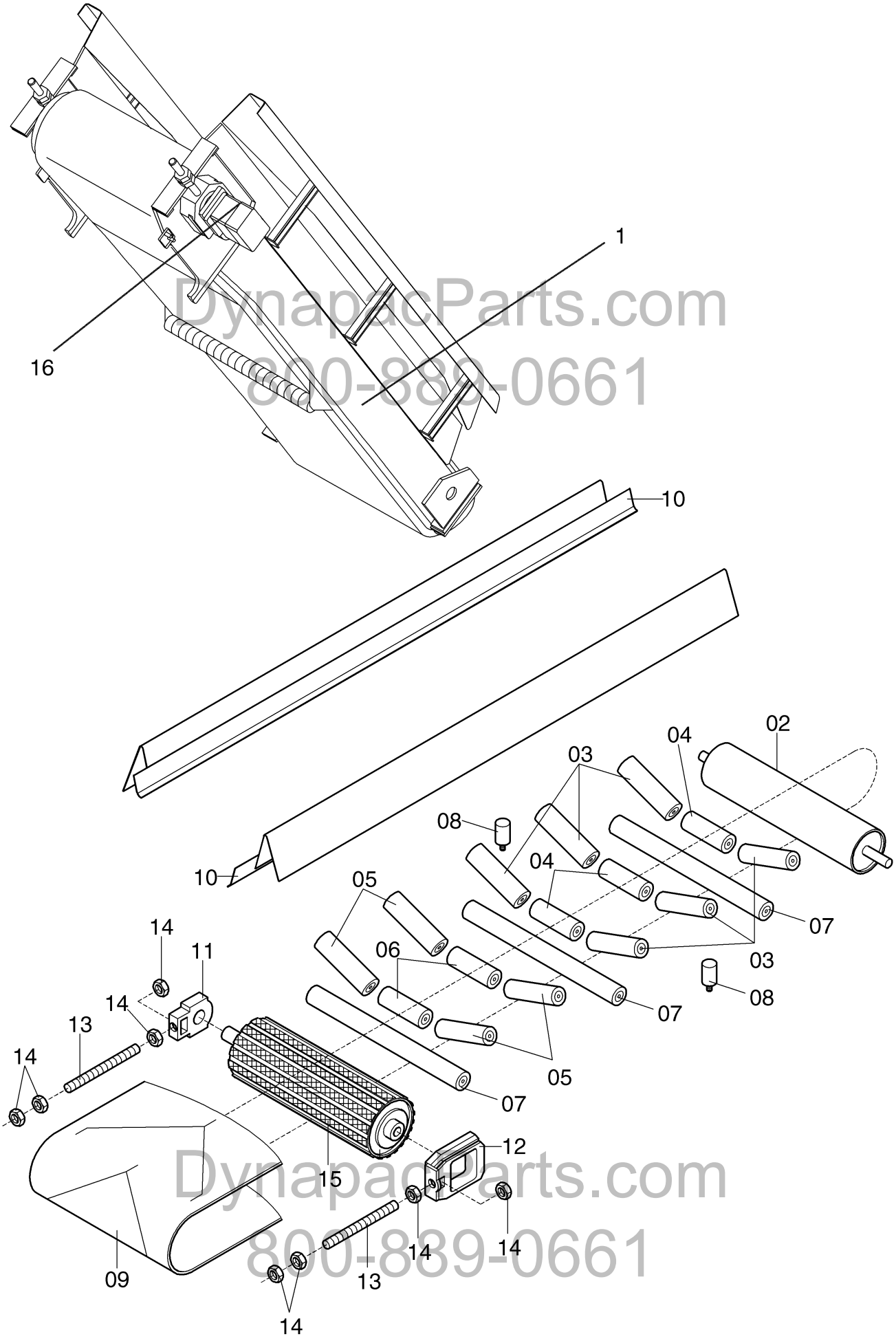

DynapacParts.com
800-889-0661

Pos. Item	Best.-Nr. Part No.	Anz. Qty.	Beschreibung Description	Bemerkung Note
1	930211455	1	Collating conveyor	
2	930211412	1	Reversing roller	
3	930211414	6	Upper belt pulley	89x315
4	930211415	3	Upper belt pulley	89x250
5	930211416	4	Upper belt pulley	89x315
6	930211418	4	Upper belt pulley	89x250
7	930211421	3	Lower belt pulley	89x850
8	930211422	2	Side guide roller	
9	930211425	1	Converyor belt	
10	930211427	2	Side sealing rubber	
11	930211430	1	Tension bearing plate	
12	930211432	1	Tension bearing plate motor side	
13	930226042	2	Screw rod	
14	930420613	8	Hex. nut	
15	930211410	1	Drive rotor	
16	966057210	1	Hydraulic motor	
_01	932785874	1	_Sealing kit	
_02	931701196	1	_Feather key	
_03	932785830	1	_Sealing washer	

DynapacParts.com
800-889-0661

DynapacParts.com
800-889-0661

DynapacParts.com
800-889-0661

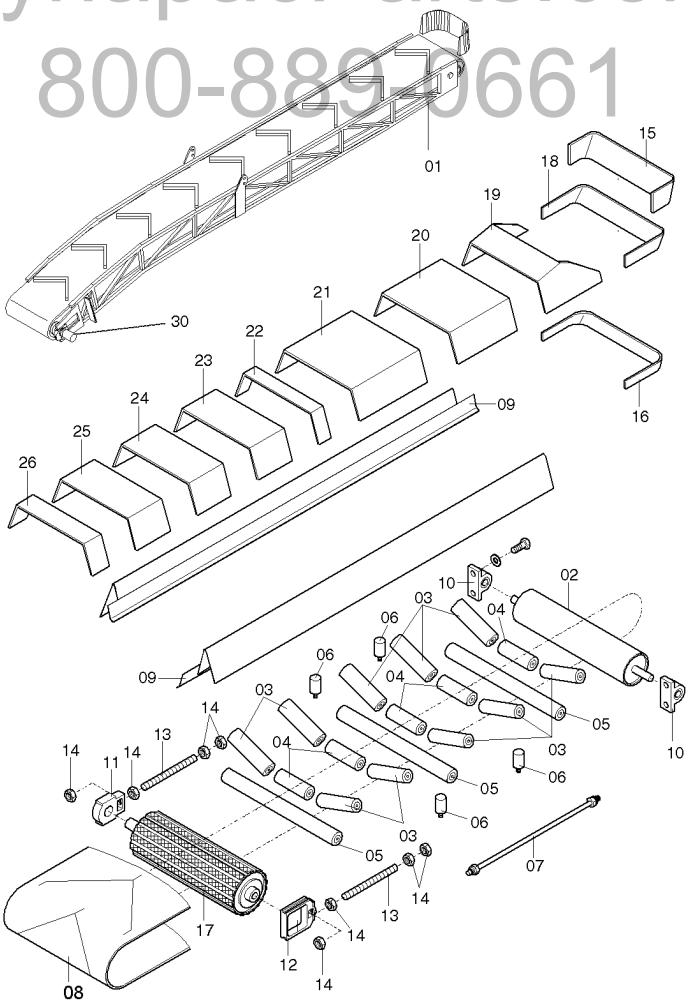

DynapacParts.com
800-889-0661

Pos. Item	Best.-Nr. Part No.	Anz. Qty.	Beschreibung Description	Bemerkung Note
1		1	Conveyor	
2		1	Reversing roller	
3	930211416	20	Upper belt pulley	89x315
4	930211418	10	Upper belt pulley	89x250
5	930211421	5	Lower belt pulley	89x850
6	930211422	4	Side guide roller	
7		2	Hydraulic	
8	930211426	1	Converyor belt	
9	930211428	2	Side sealing rubber	
10	930211429	2	Bearing	
11	930211430	1	Tension bearing plate	
12	930211433	1	Tension bearing plate motor side	
13		2	Screw rod	
14		8	Hex. nut	
15	930211438	1	Rubber guide, behind top	
16	930211439	1	Rubber guide, behind down	
17	930404309	1	Repair kit for drum	
18	930118513	1	Funnel	
19	930101651	1	Covering	1
20	930101652	1	Covering	2
21	930101653	1	Covering	3
22	930101654	1	Covering	4
23	930101655	1	Covering	5
24	930101656	1	Covering	6
25	930101657	1	Covering	7
26	930101658	1	Covering	8
27	930101659	1	Covering	9
30	966058505	1	Hydraulic motor	
_01	966534203	1	_Sealing kit	

DynapacParts.com
800-889-0661

DynapacParts.com
800-889-0661

Pos. Item	Best.-Nr. Part No.	Anz. Qty.	Beschreibung Description	Bemerkung Note
	500-04110	1	**Steering, compl.**	

DynapacParts.com
800-889-0661

DynapacParts.com
800-889-0661

Steering, compl.

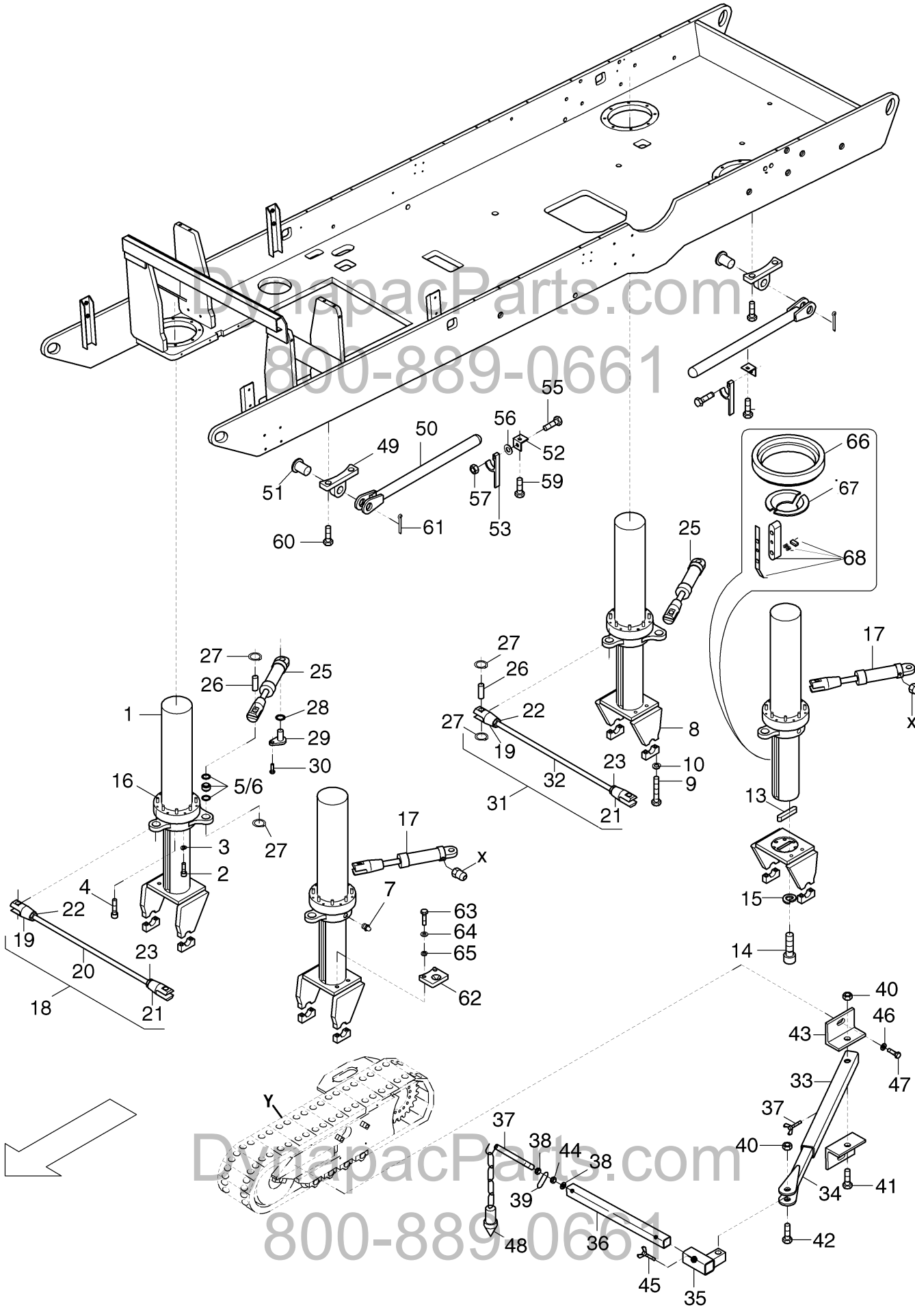

DynapacParts.com
800-889-0661

Pos. Item	Best.-Nr. Part No.	Anz. Qty.	Beschreibung Description	Bemerkung Note
	500040000		Steering	
1	500040100	2	Guide legg I compl.	
	932785703	1	Sealing kit	
2	508005	48	Screw	
3	49900161	48	Screw retention	
4	508028	40	Cylinder screw	
5	935112540	8	Hinge bearing	
6	931810060	16	Circlip	
7	935512155	4	Grease nipple	
8	500040101	4	Track console, compl.	
9	938111943	16	Hex. screw	
10	936900029	16	Spring washer	
13	500040110	4	Feather key	
14	937939494	28	Screw	
15	939940040	29	Feather disc	
16	937932604	64	Screw	
17	965172902	2	Cylinder with sensor	
_01	932785697	1	_Sealing kit	
18	500040113	1	Crosstie, compl.	
19	500040106	2	Fork head LH-threaded	
20	500040116	1	Rod, front	
21	500040115	2	Fork head RH-threaded	
22	937181239	2	Hex. nut	
23	937182239	2	Hex. nut left threaded	
24	500040104	2	Guide legg II compl.	
	932785703	1	Sealing kit	
25	965172903	2	Cylinder	
_01	932785697	1	_Sealing kit	
26	500040117	4	Bolt	
27	936002527	8	Circlip ring	
28	938590030	4	Disc	
29	500040125	4	Bolt for steering	
30	500028	4	Screw	
31	500040118	1	Crosstie, compl.	
32	500040119	1	Rod, rear	
33	500040127	2	Telescopic tube outside	
34	500040128	2	Teleskopic tube, innerside	
35	500040129	2	Guide	
36	500040130	2	Support lever	
37	500040131	2	Chain holder	
38	939130012	4	Disc	
40	938481012	4	Nut	
41	938111728	2	Hex. screw	
42	500082	2	Hex. screw	
43	500040126	2	Angle	
44	570006	6	Nut	

DynapacParts.com
800-889-0661
DynapacParts.com
800-889-0661

Steering, compl. **500-04110**

Pos. Item	Best.-Nr. Part No.	Anz. Qty.	Beschreibung Description	Bemerkung Note
45	937032601	4	Wing screw	
46	939130014	4	Disc	
47	500193	4	Screw	
48	500040147	2	Indicator	
49	500040139	4	Support	
50	500040141	4	Support rod	
51	990020218	4	Bolt	
52	500040146	4	Angle	
53	500040148	4	Support holder	
55	500197	4	Hex. screw	
56	939130014	4	Disc	
57	938780018	4	Hex. nut	
59	500163	4	Hex. screw	
60	938150976	8	Hex. screw	
61	936790702	4	Split pin	
62	500040140	4	Support plate	
63	500037	8	Hex. screw	
64	936905020	8	Spring washer	
65	600009	8	Disc	
66	930240607	4	Half of support	
67	932701291	4	Scraper	
68	660913	1	Repair set for steering	
X		2	Sensor	
Y	500-05110		Track group	

DynapacParts.com
800-889-0661

DynapacParts.com
800-889-0661

Steering, compl. **500-04110**

Pos. Item	Best.-Nr. Part No.	Anz. Qty.	Beschreibung Description	Bemerkung Note
	500-05210	1	**Track group**	

DynapacParts.com
800-889-0661

DynapacParts.com
800-889-0661

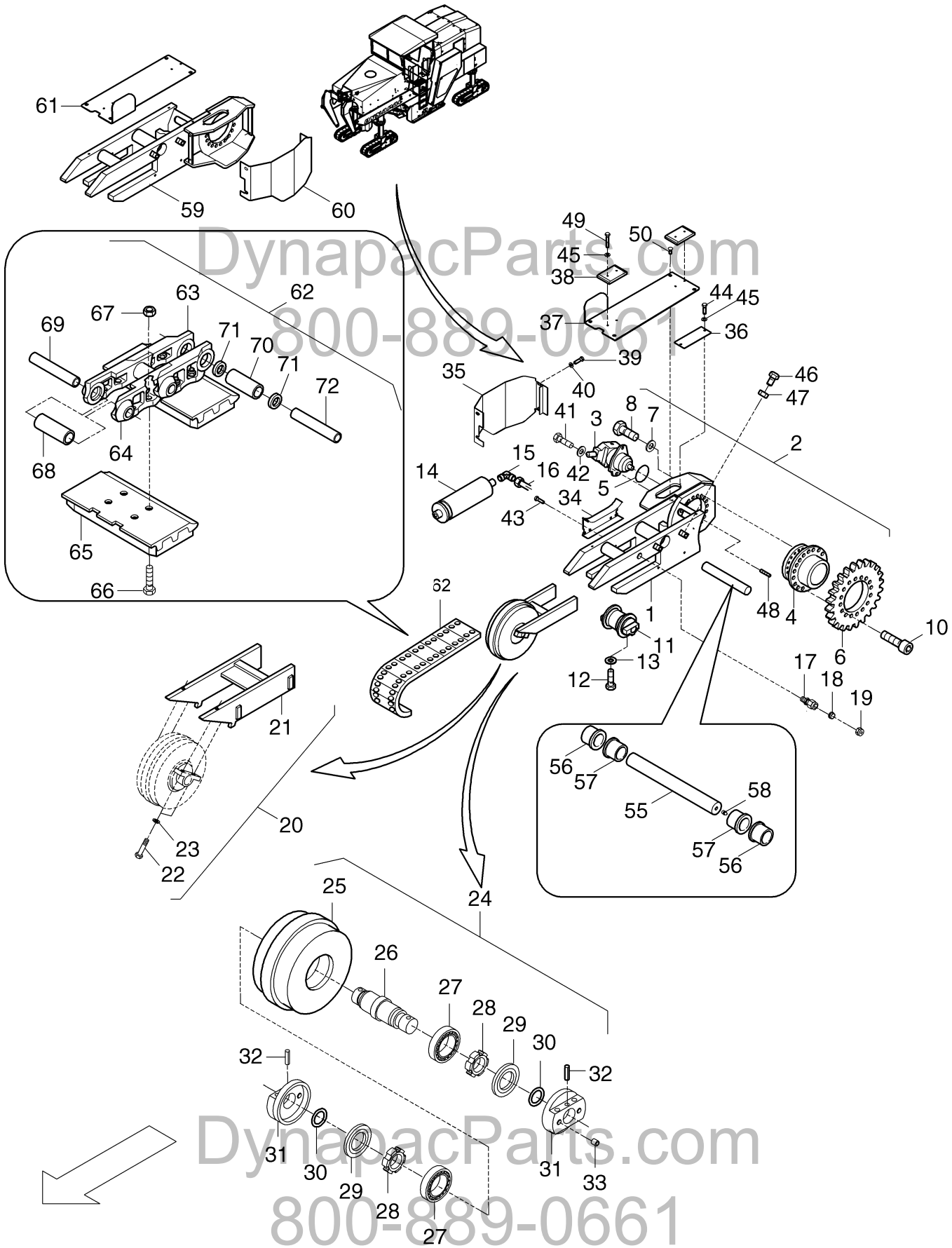

DynapacParts.com
800-889-0661
DynapacParts.com
800-889-0661

Pos. Item		Best.-Nr. Part No.	Anz. Qty.	Beschreibung Description	Bemerkung Note
1		500053200	2	Track frame, left	
2		500050300	4	Track drive, compl.	
3		966025362	4	Adjust. motor	
4		951020924	4	Drive gear box	
5		951053015	4	O-ring	
6		500050301	4	Sprocket wheel	
7		939515040	80	Locking element	
8		947706	80	Hex. screw	
10		937934496	80	Screw	
11		952701595	16	Roller	
12		938111727	64	Hex. screw	
13		936905026	64	Spring washer	
14		952643626	4	Tensioner	
15	*	961136208	4	Swivel nut elbow	
16	*	755172506	4	Lubrication line	
17	*	961131154	4	Straight screwing	
18	*	932702328	4	Sealing	
19	*	881171447	4	Grease nipple	
20		500150133	4	Idler guide	
21	*	500050701	4	Guide	
22	*	500196	16	Hex. screw	
23	*	936905020	16	Spring washer	
24		500150132	4	Idler, compl.	
25	*	500150101	4	Idler	
26	*	755172607	4	Axle	
27	*	935021490	8	Taper roller bearing	
28	*	939759913	8	Slotted round nut	
29	*	932786410	8	Sealing	
30	*	932211617	8	O-ring	
31	*	755172609	8	Cap	
32	*	931501330	8	Clamping sleeve, heavy	
33	*	937860060	16	Plug screw	
34		500050800	4	Hose guide	
35		500150123	2	Cover, left	
36		500051100	4	Cover plate	
37		500150129	2	Slide guide, left	
38		500050102	8	Glide plate	
39		500051	16	Screw	
40		939130014	16	Disc	
41		500123	8	Screw	
42		600011	8	Disc	
43		938150772	16	Hex. screw	
44		500048	8	Screw	
45		600008	24	Disc	
46		938166084	16	Hex. screw	

*) Available as single part

DynapacParts.com
800-889-0661
DynapacParts.com
800-889-0661

Pos. Item		Best.-Nr. Part No.	Anz. Qty.	Beschreibung Description	Bemerkung Note
47		570016	16	Hex. nut	M24 DIN 934
48		937976810	8	Threaded pin	
49		500029	16	Hex. screw	
50		939470272	16	Screw	
55		500056001	4	Axle	
56		500140102	8	Clamping bushing	
57		930136843	8	Collar bushing	BO9 60x65x7
58		935511210	8	Grease nipple	
59		500150106	2	Track frame, right	
60		500150121	2	Hex. nut	
61		500150128	2	Slide guide, right	
62		952665991	4	Track chain, compl.	
63	*	952691527	X	Chain link, right	
64	*	952691528	X	Chain link, left	
65	*	952613031	X	Bottom plate	
66	*	952761138	X	Hex. screw	
67	*	952813121	X	Hex. nut	
68	*	952691419	X	Chain bushing	
69	*	952691418	X	Chain bolt	
70	*	952644881	1	End bushing	
71	*	952774361	2	End disc	
72	*	952633000	1	End bolt	

*) Available as single part

DynapacParts.com
800-889-0661

DynapacParts.com
800-889-0661

Pos. Item	Best.-Nr. Part No.	Anz. Qty.	Beschreibung Description	Bemerkung Note
	500-06110C	1	**Drive unit**	
	500-06120A	1	**Cooler**	
	500-06132	1	**Air filter, air intake**	
	500-06140	1	**Fuel system, Exhaust system, Mounting parts**	

DynapacParts.com
800-889-0661

DynapacParts.com
800-889-0661

Drive

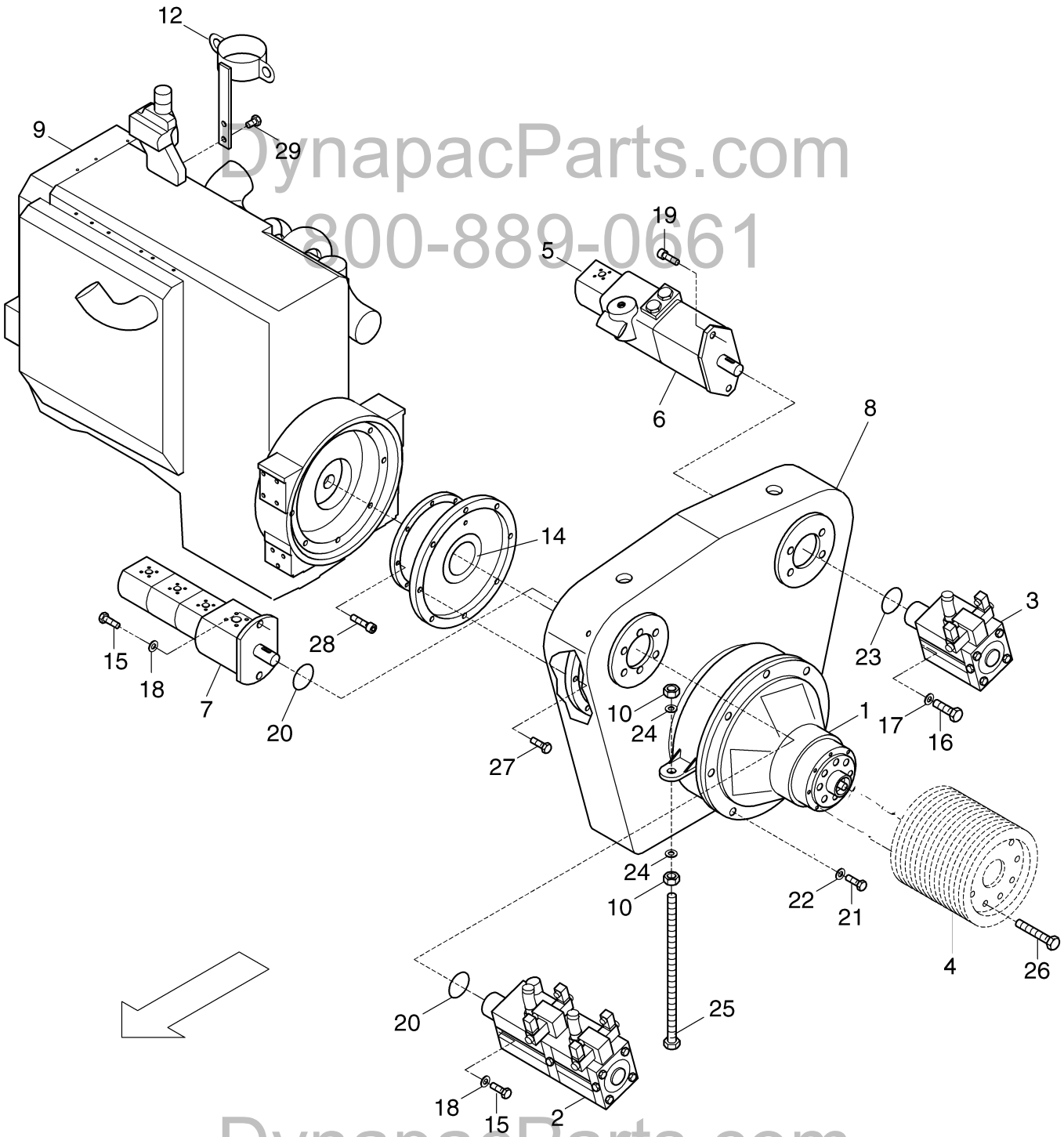

DynapacParts.com
800-889-0661
DynapacParts.com
800-889-0661

Pos. Item	Best.-Nr. Part No.	Anz. Qty.	Beschreibung Description	Bemerkung Note
	500160144	1	Drive unit	ab 500.108
1	933-14302	1	**Clutch**	
2	967045551	1	Axial pump	
3	967008102	1	Axial pump	
4	500120264	1	V-belt pulley	
5	967089008	1	Gear pump	
_01	967536842	1	_Seal kit	
6	967005516	1	Adjustable pump	
7	967190160	1	Hydraulic pump	
_01	967536861	1	_Seal kit	
8	951058551	1	Split gear box	Claas
9	966382416	1	Engine QSX 15-C600, 448KW	
10	570016	2	Hex. nut	M24 DIN 934
12	500060148	1	Support	
14	933538211	1	Elastic coupling part	
15	938150816	4	Hex. screw	
16	938150976	2	Hex. screw	
17	939010413	2	Disc	
18	600017	4	Disc	
19	937932439	2	Screw	
20	932211722	3	O-ring	
21	500240	12	Hex. screw	
22	600008	12	Disc	
23	932211778	1	O-ring	
24	600020	4	Disc	
25	500160137	2	Supporting	
26	938160873	8	Screw	
27	939780420	12	Hex. screw	
28	939780422	8	Screw	1/2x1"
29	500193	2	Screw	
30				17-03-2005

DynapacParts.com
800-889-0661

DynapacParts.com
800-889-0661

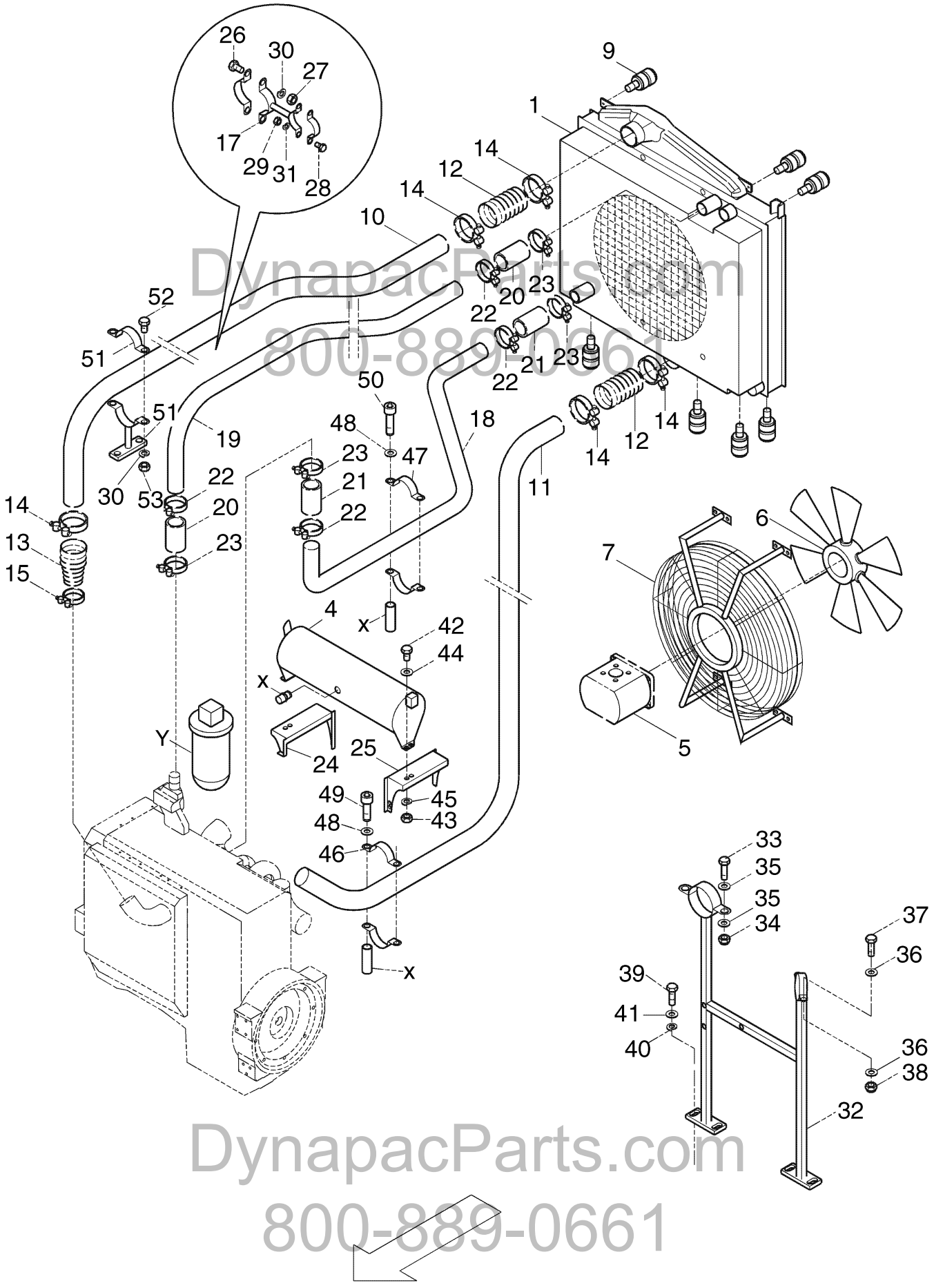

DynapacParts.com
800-889-0661

Pos. Item	Best.-Nr. Part No.	Anz. Qty.	Beschreibung Description	Bemerkung Note
1	950583212	1	3-circuit cooler	
4	950599341	1	Expansion tank	
5	950594123	1	Hydraulic motor	
_01	966534207	1	_Sealing kit	
6	950594119	1	Fan	
7	950594124	1	Protective grating	
9	950594126	7	Rubber buffer	
10	500160114	1	Air inlet pipe Engine	
11	500160112	1	Air inlet pipe cooler	
12	930429151	2	Silicon sleeve	
13	930429154	2	Silicon reducer sleeve	
14	930349093	6	Clip	
15	930349094	2	Clip	
16	500160142	1	Holder	
17	500160125	1	Holder between water- and air- pipe	
18	500160113	1	Water feed pipe engine	
19	500160111	1	Water feed pipe cooler	
20	930429152	2	Silicon reducer sleeve	
21	930429153	2	Silicon reducer sleeve	
22	930349095	4	Clip	
23	930349097	4	Clip	
24	500160132	1	Support, right	
25	500160131	1	Support, left	
26	500028	2	Screw	
27	570006	2	Nut	
28	500053	2	Screw	
29	570005	2	Nut	
30	704130	4	Spring washer	
31	49900161	2	Screw retention	
32	500160142	1	Holder	
33	500028	2	Screw	
34	938500008	2	Nut	
35	600008	2	Disc	
36	600006	2	Disc	
37	500053	2	Screw	
38	93850005	2	Safety nut	
39	500029	4	Hex. screw	
40	600008	4	Disc	
41	704130	4	Spring washer	
42	500021	4	Screw	
43	570005	4	Nut	
44	600006	4	Disc	
45	49900161	4	Screw retention	
46	934367015	1	Clip	
47	934367014	1	Clip	
48	600006	4	Disc	

DynapacParts.com
800-889-0661
DynapacParts.com
800-889-0661

Pos. Item	Best.-Nr. Part No.	Anz. Qty.	Beschreibung Description	Bemerkung Note
49	508078	2	Screw	
50	508021	2	Screw	
51	500060147	1	Holder for air inlet pipe engine	
52	500028	2	Screw	
53	570006	2	Nut	
X	930540715	1	Sensor	
Y	964152662	1	Water filter	

DynapacParts.com
800-889-0661

DynapacParts.com
800-889-0661

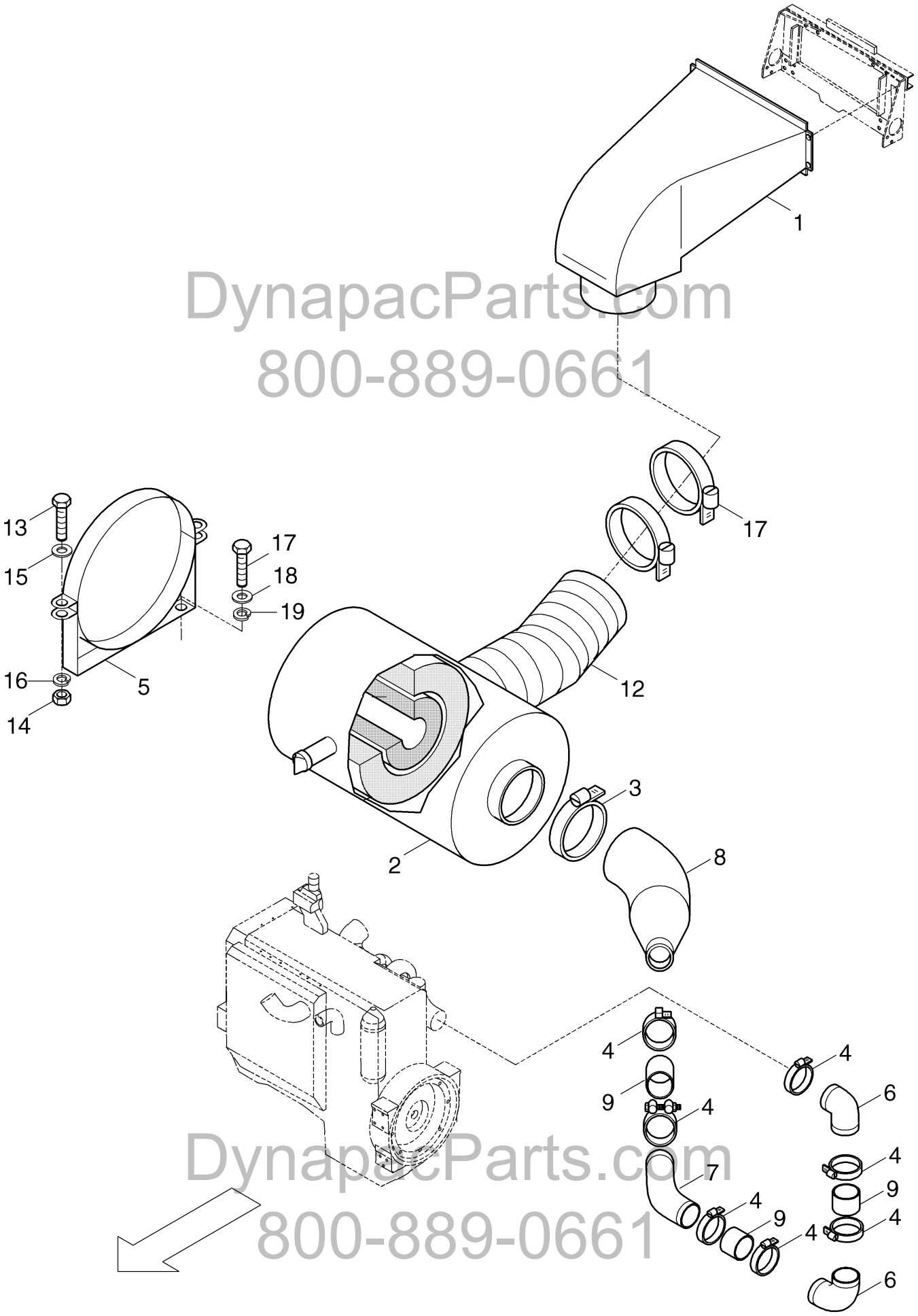

DynapacParts.com
800-889-0661
DynapacParts.com
800-889-0661

Pos. Item	Best.-Nr. Part No.	Anz. Qty.	Beschreibung Description	Bemerkung Note
1	500260101	1	Air inlet	
2	964164806	1	Air filter	
_01	964164809	1	_Air filter element, outside	
_02	964164810	1	_Air filter element, inside	
_03	964755189	1	_Venturi valve	
3	934349097	1	Clip	
4	934349098	6	Clip	
5	964164807	2	Clip	
6	930235241	2	Rubber elbow	
7	930235243	1	Rubber elbow	
8	500160120	1	Reducer hose	
9	500160140	3	Tube	
10	934400215	1	Threaded clip	
12	392400029	1	Elastic pipe	
13	500138	2	Hex. screw	
14	570005	2	Nut	
15	600006	2	Disc	
16	704130	2	Spring washer	
17	938155759	4	Hex. screw	
18	600008	4	Disc	
19	49900161	4	Screw retention	
			_	28.06.05

DynapacParts.com
800-889-0661

DynapacParts.com
800-889-0661

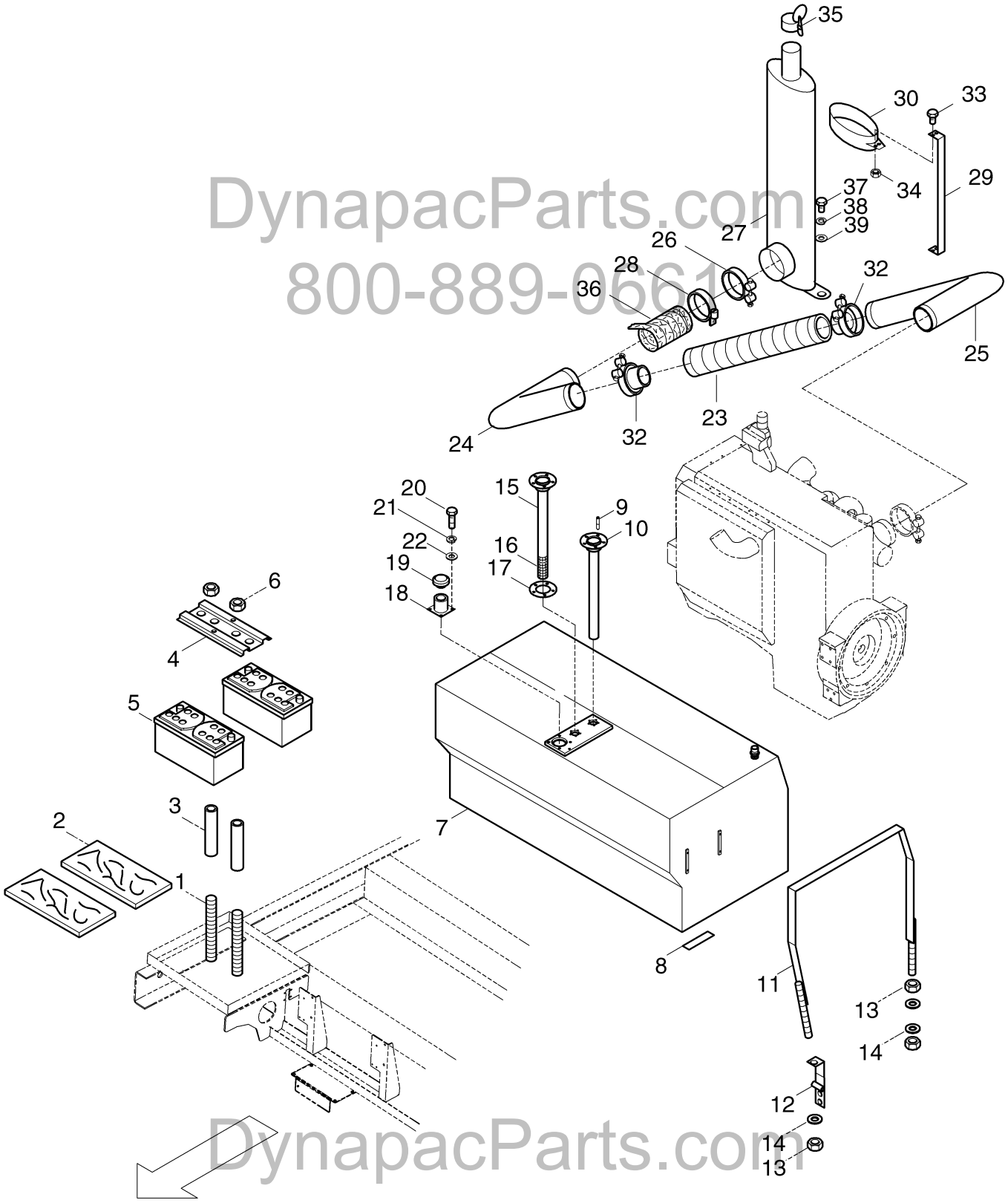

DynapacParts.com
800-889-0661

DynapacParts.com
800-889-0661

Pos. Item	Best.-Nr. Part No.	Anz. Qty.	Beschreibung Description	Bemerkung Note
1	500060149	2	Screw rod	
2	930121158	2	Wood plate	
3	500060150	2	Tube	
4	500010527	1	Clamping plate	
5	977022611	2	Battery	
6	570008	4	Nut	
7	500060119	1	Fuel tank	
8	930235552	1	Rubber strip	
9	938272111	5	Stud bolt screw	
10	500060127	1	Intake stud	
11	500060151	2	Tank support	
12	500060155	2	Tension hinge	
13	570005	6	Nut	
14	600006	4	Disc	
15	977044004	1	Fuel indicator	
16	903736230	1	Sieve	
17	932744000	1	Sealing washer	
18	500060182	1	Filling neck	
19	49300329	1	Tank locking	
20	500029	4	Hex. screw	
21	704130	4	Spring washer	
22	600008	4	Disc	
23	930211370	1	Elastic pipe	
24	500160121	1	Lower pipe	
25	500160122	1	Upper pipe	
26	930457414	2	HD clip	
27	930440041	1	Silencer	
28	930176952	1	Clip	
29	500160123	1	Support	
30	930440043	1	Muffler band	
32	930473200	2	Reducer clip	
33	500048	2	Screw	
34	570006	2	Nut	
35	930044718	1	Weather cap	
36	930225800ET	10	Bandage	1 m
37	500053	2	Screw	
38	49900161	2	Screw retention	
39	600006	2	Disc	

DynapacParts.com
800-889-0661

DynapacParts.com
800-889-0661

Pos. Item	Best.-Nr. Part No.	Anz. Qty.	Beschreibung Description	Bemerkung Note
	500-07110	1	**Hydraulik oil tank, compl.**	
	500-07120	1	**Steering 1**	
	500-07130	1	**Steering 2**	
	500-07140	1	**Drive**	
	500-07150	1	**Belt drive**	
	500-07160	1	**Rotation drives**	
	500-07161	1	**Fill pump (Option)**	
	500-07170	1	**Aggregat (with canopy)**	

DynapacParts.com
800-889-0661

DynapacParts.com
800-889-0661

Hydraulic equipment

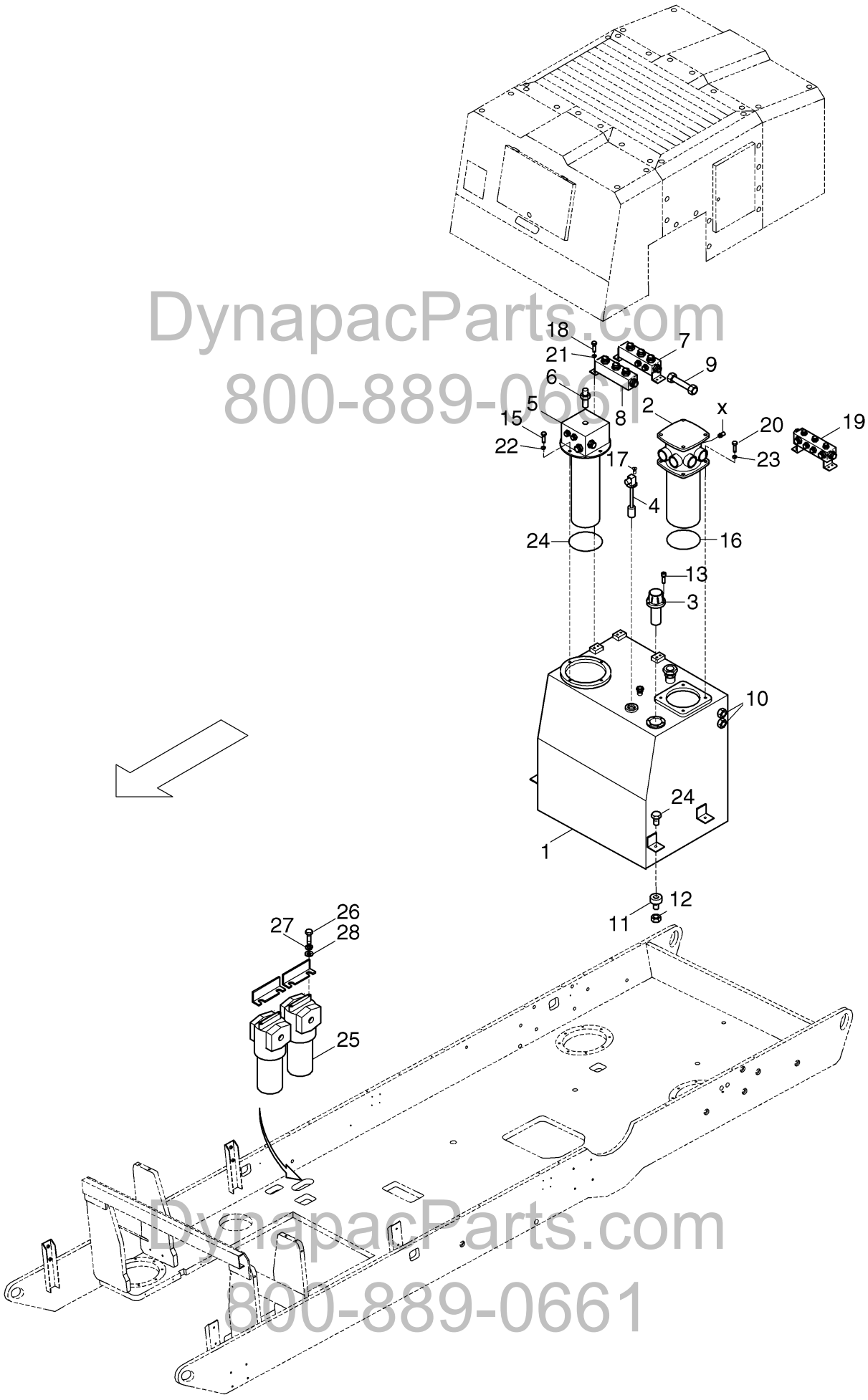

DynapacParts.com
800-889-0661

Pos. Item		Best.-Nr. Part No.	Anz. Qty.	Beschreibung Description	Bemerkung Note
		500070102	1	Hydraulik oil tank, compl.	
1		500070103	1	Tank	
2		964047053	1	Suction filter	
	*	964350857	1	Filter cartridge	
3		964152341	1	Filling filter	
4		977044003	1	Oil level indicator	
5		500070134	1	Suction adapter	
6		977045109	1	Temperature transmitter	
7		500070125	1	Manifold 3	
8		500070123	1	Manifold 1	
9		312001672	1	Tube	
10		930368912	2	Oil level gauge	
11		930235539	4	Rubber buffer	
12		370006	4	Hex. nut	
13		937932164	6	Screw	
15		500048	4	Screw	
16		929783	1	O-ring	
17		939470060	2	Screw	
18		500018	6	Hex. screw	
19		500070204	1	Manifold 4	
20		500193	4	Screw	
21		49900161	6	Screw retention	
22		704130	4	Spring washer	
23		936905020	4	Spring washer	
24		929783	1	O-ring	
25		964013551	2	Filter	
	*	964370872	2	Filter cartridge	
26		500035	4	Hex. screw	
27		936905020	4	Spring washer	
28		600009	4	Disc	
X		964805451	1	Low pressure switch	

*) Available as single part

DynapacParts.com
800-889-0661

DynapacParts.com
800-889-0661

Hydraulik oil tank, compl. **500-07110**

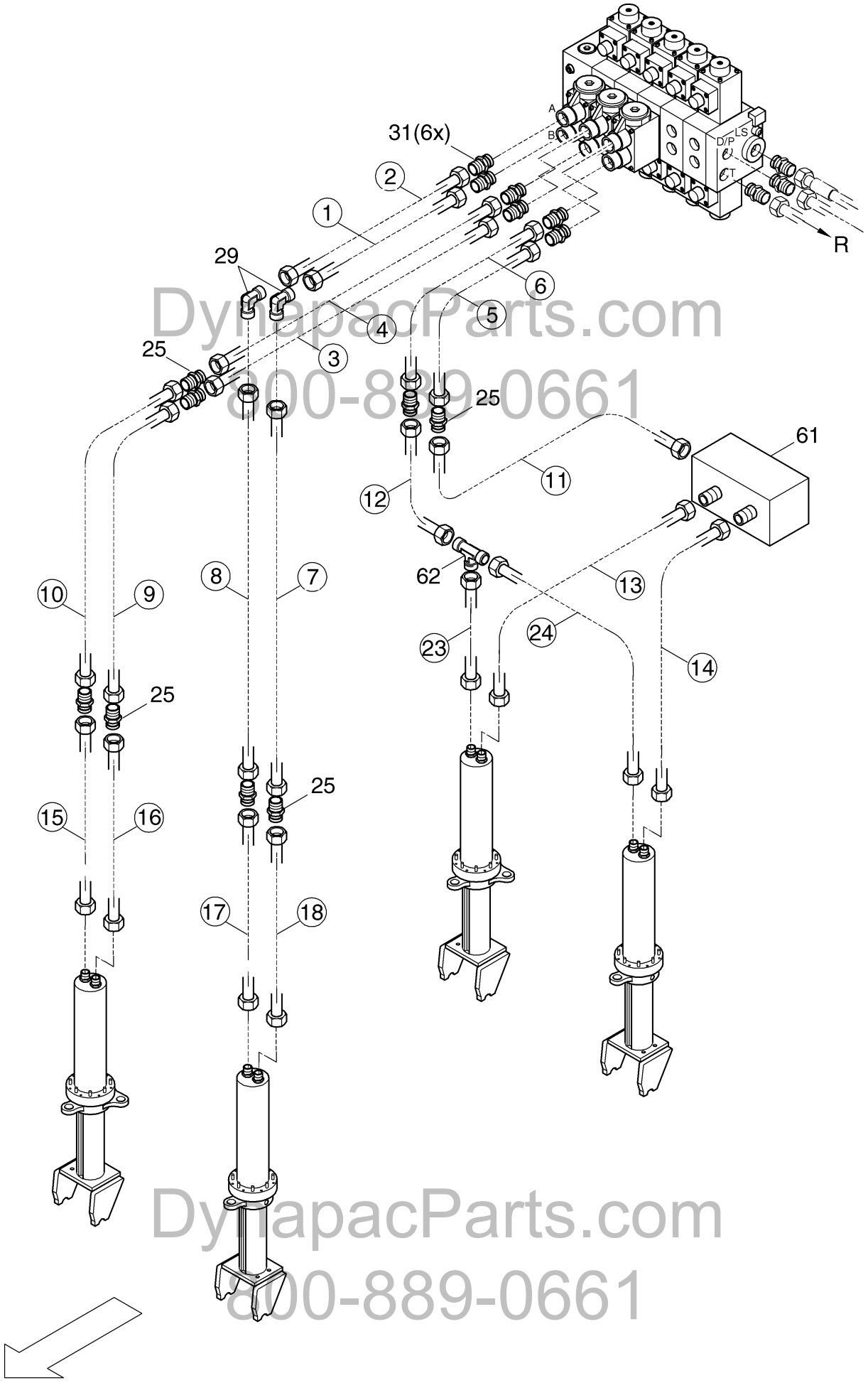

DynapacParts.com
800-889-0661

DynapacParts.com
800-889-0661

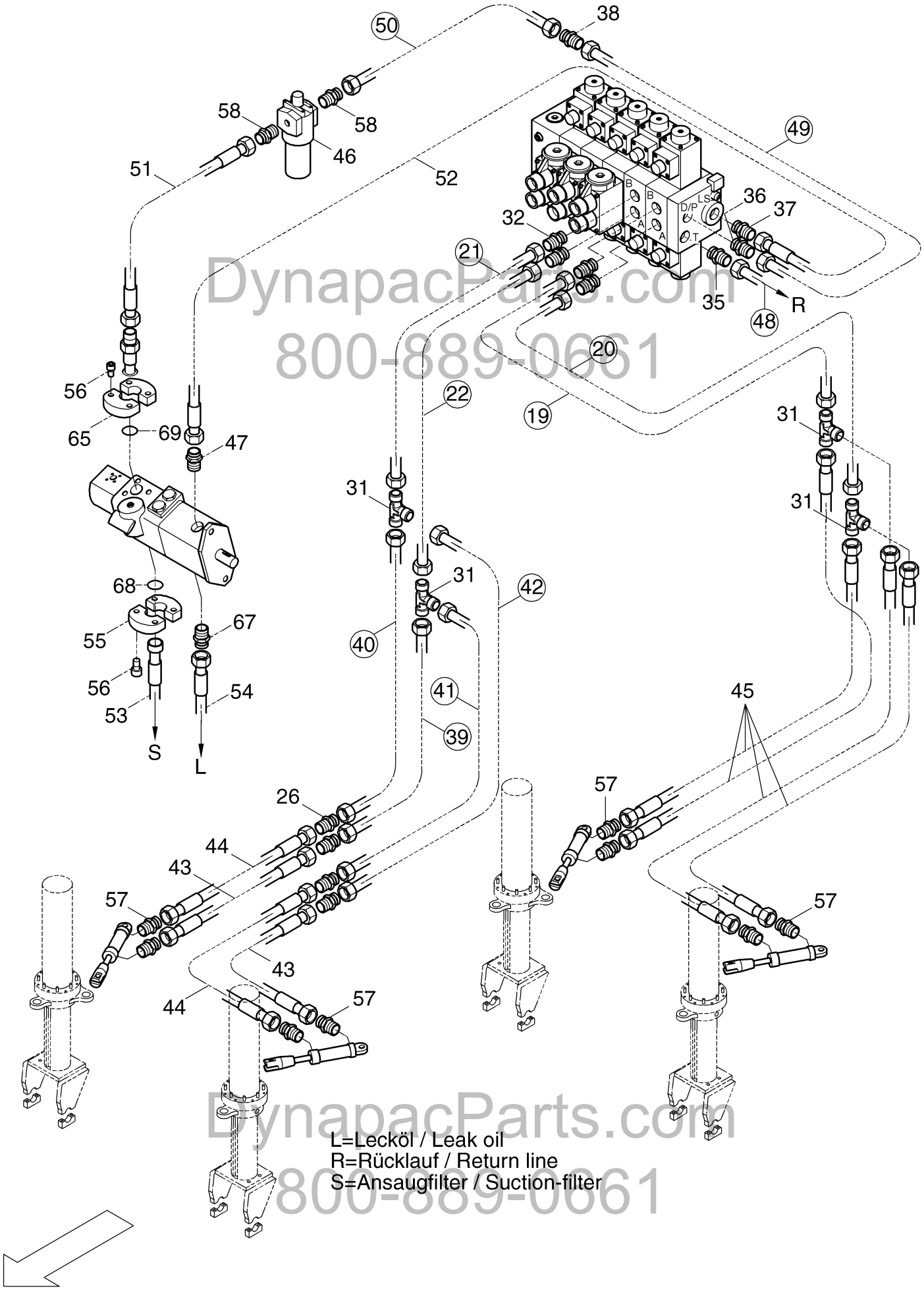

DynapacParts.com
800-889-0661

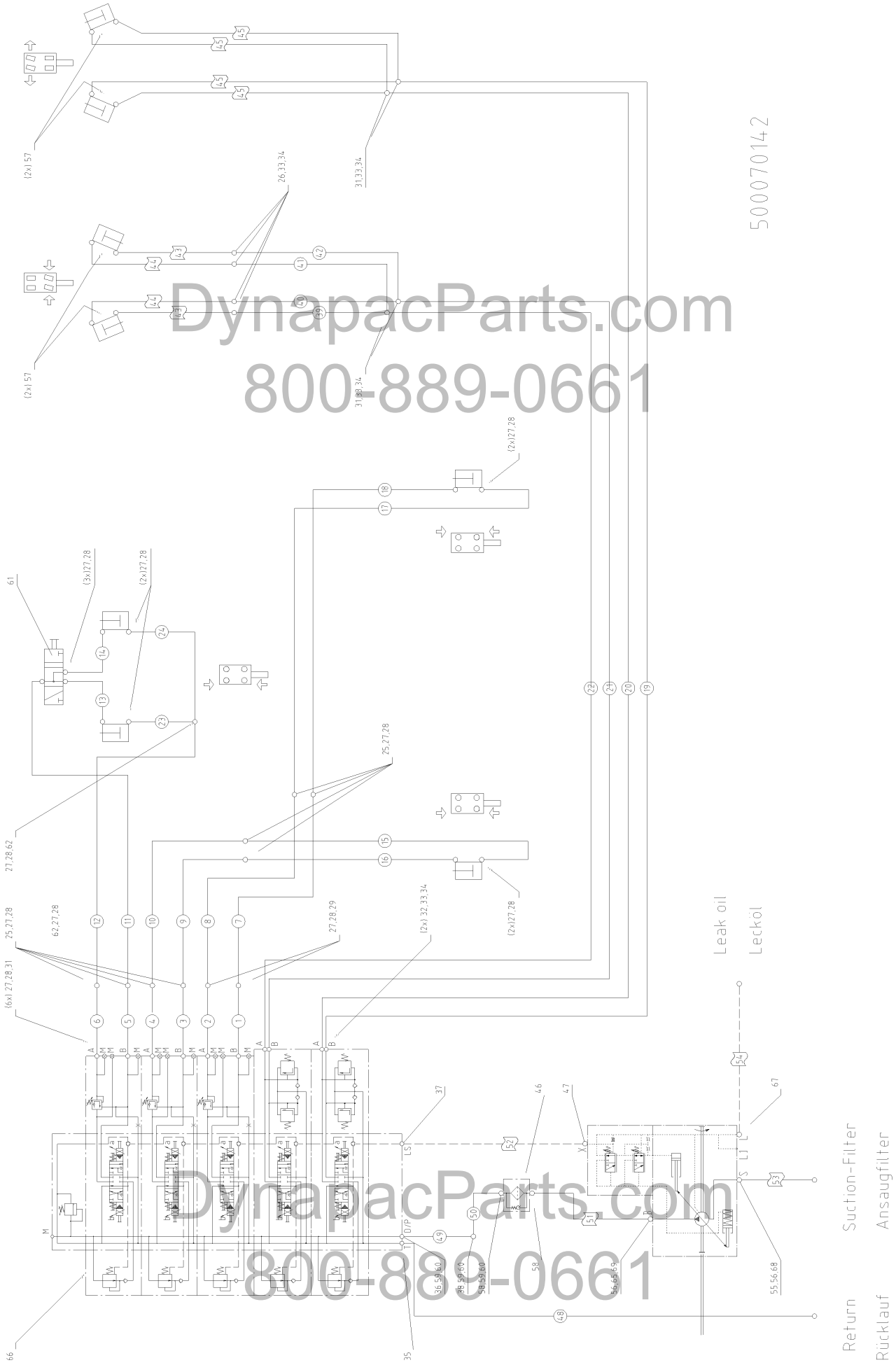
500070142
Leak oil
Leckol
Suction-Filter
Ansaugfilter
Return
Rücklauf
DynapacParts.com
800-889-0661
DynapacParts.com
800-889-0661

Pos. Item	Best.-Nr. Part No.	Anz. Qty.	Beschreibung Description	Bemerkung Note
	500070142		Steering 1	
1	500070129	1	Pipeline	
2	500070130	1	Pipeline	
3	500070131	1	Pipeline	
4	500070132	1	Pipeline	
5	500070133	1	Pipeline	
6	500070138	1	Pipeline	
7	500070139	1	Pipeline	
8	500070229	1	Pipeline	
9	500070230	1	Pipeline	
10	500070231	1	Pipeline	
11	500070244	1	Pipeline	
12	500070245	1	Pipeline	
13	500070232	1	Pipeline	
14	500070233	1	Pipeline	
15	500070234	1	Pipeline	
16	500070235	1	Pipeline	
17	500070236	1	Pipeline	
18	500070237	1	Pipeline	
19	500070238	1	Pipeline	
20	500070239	1	Pipeline	
21	500070240	1	Pipeline	
22	500070241	1	Pipeline	
23	500070242	1	Pipeline	
24	500070243	1	Pipeline	
25	961903007	8	Straight coupling	
26	961903008	4	Straight coupling	
27	961102007	30	Union nut	
28	961102057	30	Cutting ring	
29	961904007	2	Union elbow both ports	
30	961905008	4	Union tee	
31	961353009	8	Straight double-ended union	
32	961935208	1	Straight double-ended union	
33	961102008	1	Union nut	
34	961102058	1	Cutting ring	
35	961935211	1	Straight double-ended union	
36	961353030	1	Straight double-ended union	
37	961935206	1	Straight screwing	
38	961903021	1	Straight coupling	
39	500070246	1	Pipeline	
40	500070247	1	Pipeline	
41	500070248	1	Pipeline	
42	500070249	1	Pipeline	
43	960831001	2	Hose	
44	960830455	2	Hose	
45	960831201	4	Hose	

DynapacParts.com
800-889-0661
DynapacParts.com
800-889-0661

Pos. Item	Best.-Nr. Part No.	Anz. Qty.	Beschreibung Description	Bemerkung Note
46	964013551	1	Filter	
47	961934234	1	Straight double-ended union	
48	500070250	1	Pipeline	
49	500070251	1	Pipeline	
50	500070252	1	Pipeline	
51	960865396	1	Hose	
52	960823650	1	Hose	
53	960892975	1	Hose	
54	960850355	1	Hose	
55	930211345	2	Flange half	
56	508029	8	Screw	
57	961341073	8	Straight double-ended union	
58	961935152	2	Straight double-ended union	
59	961102021	1	Nut	
60	961102071	1	Cutting ring	
61	930296452	1	Ball valve	
62	961905007	1	Equal-tee	
63	961932096	1	Straight screwing	
65	930211340	2	Flange half	
66	963171002	1	Hydr. block	
67	961935150	1	Straight double-ended union	
68	932323744	1	O-ring	
69	932323729	1	O-ring	

DynapacParts.com
800-889-0661

DynapacParts.com
800-889-0661

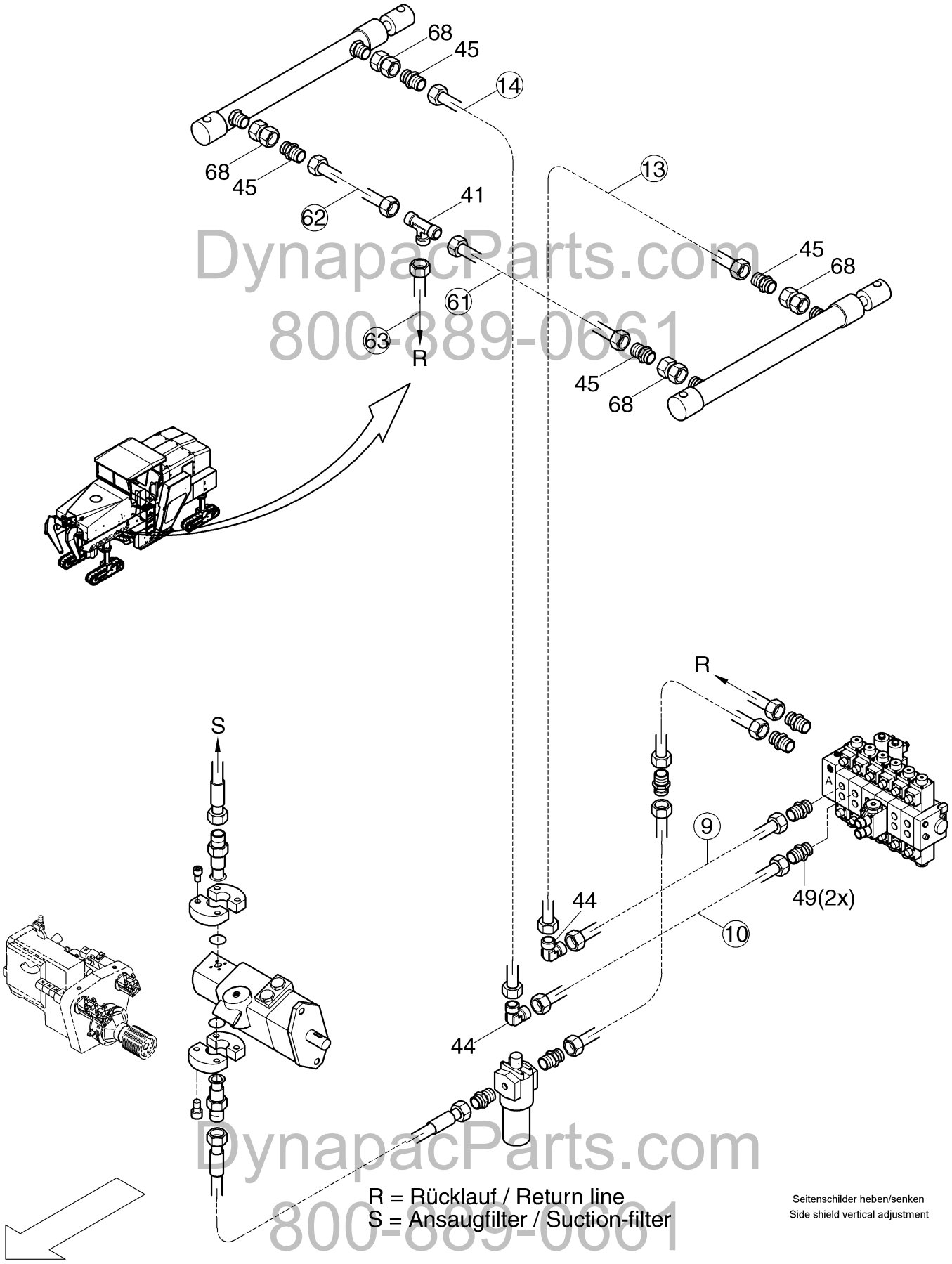

DynapacParts.com
800-889-0661

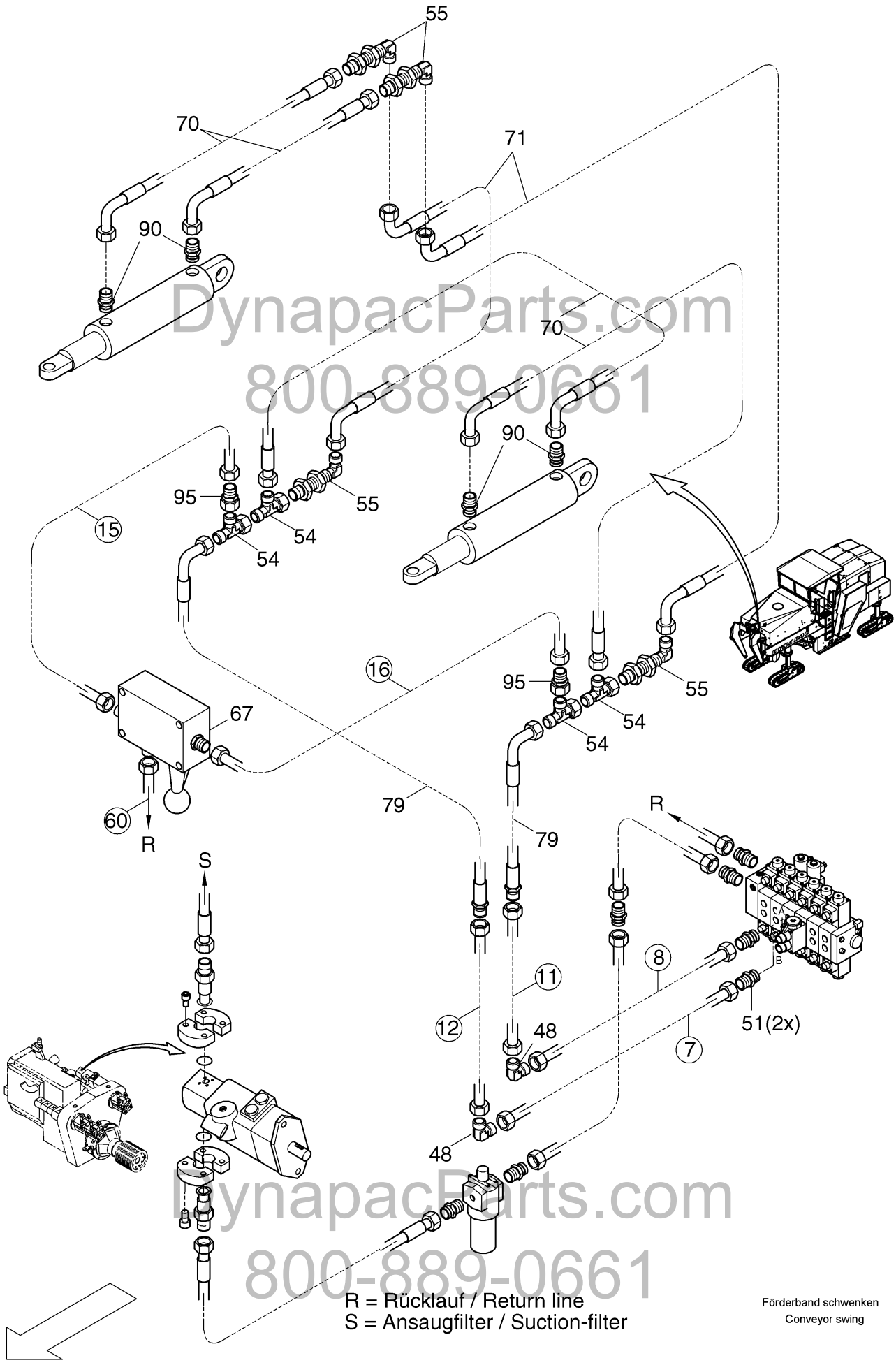

DynapacParts.com
800-889-0661

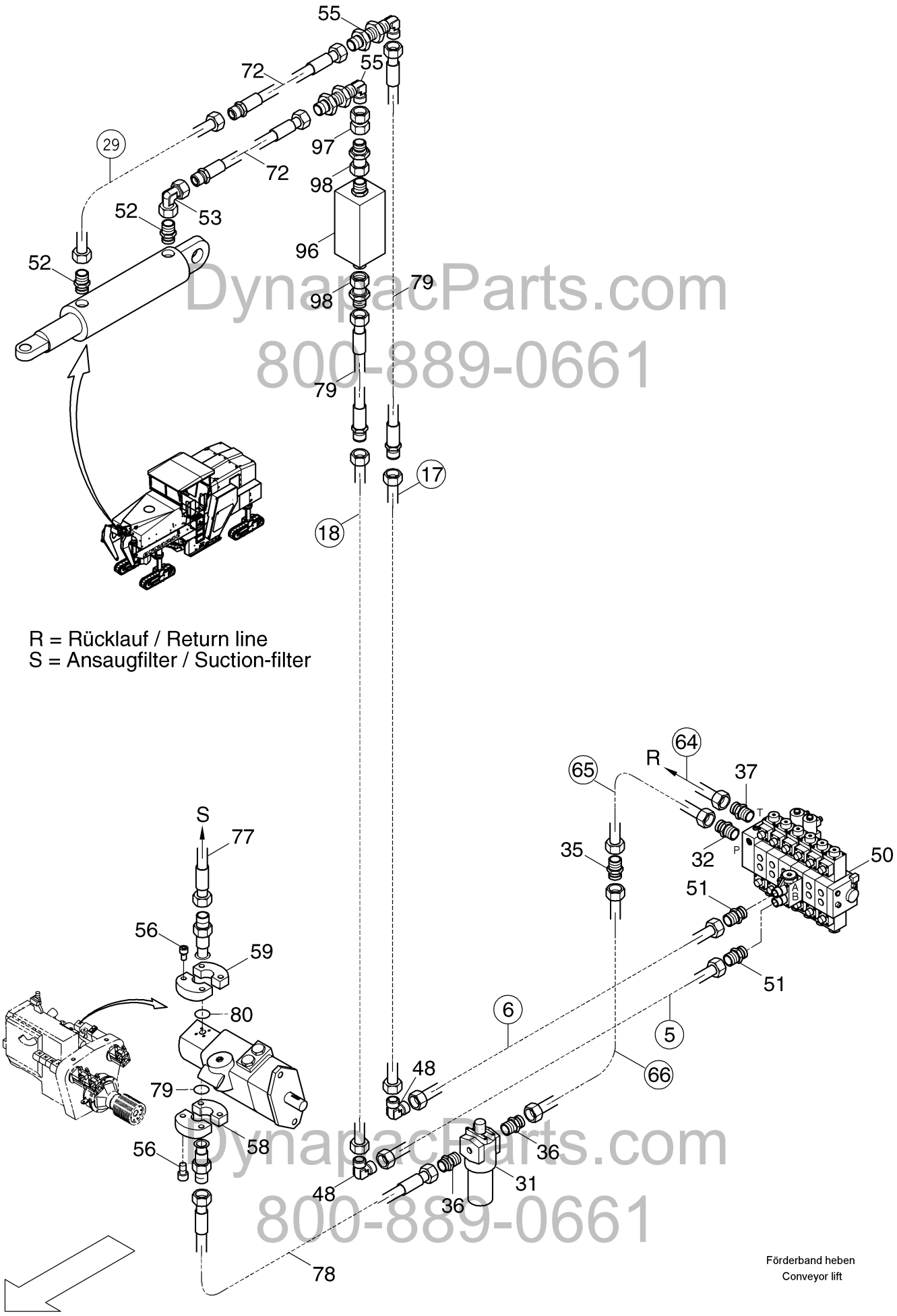

DynapacParts.com
800-889-0661
DynapacParts.com
800-889-0661

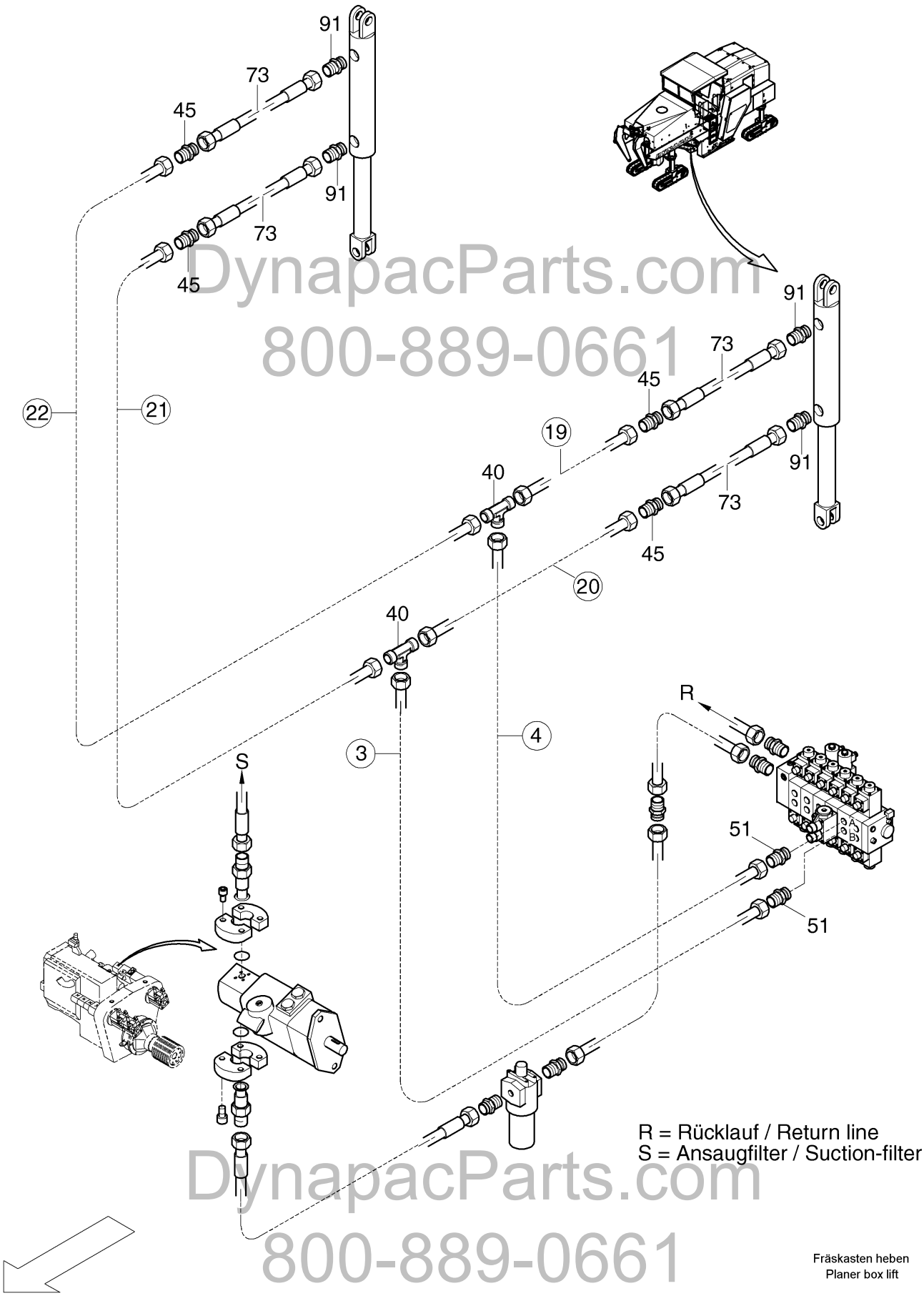

DynapacParts.com
800-889-0661
DynapacParts.com
800-889-0661

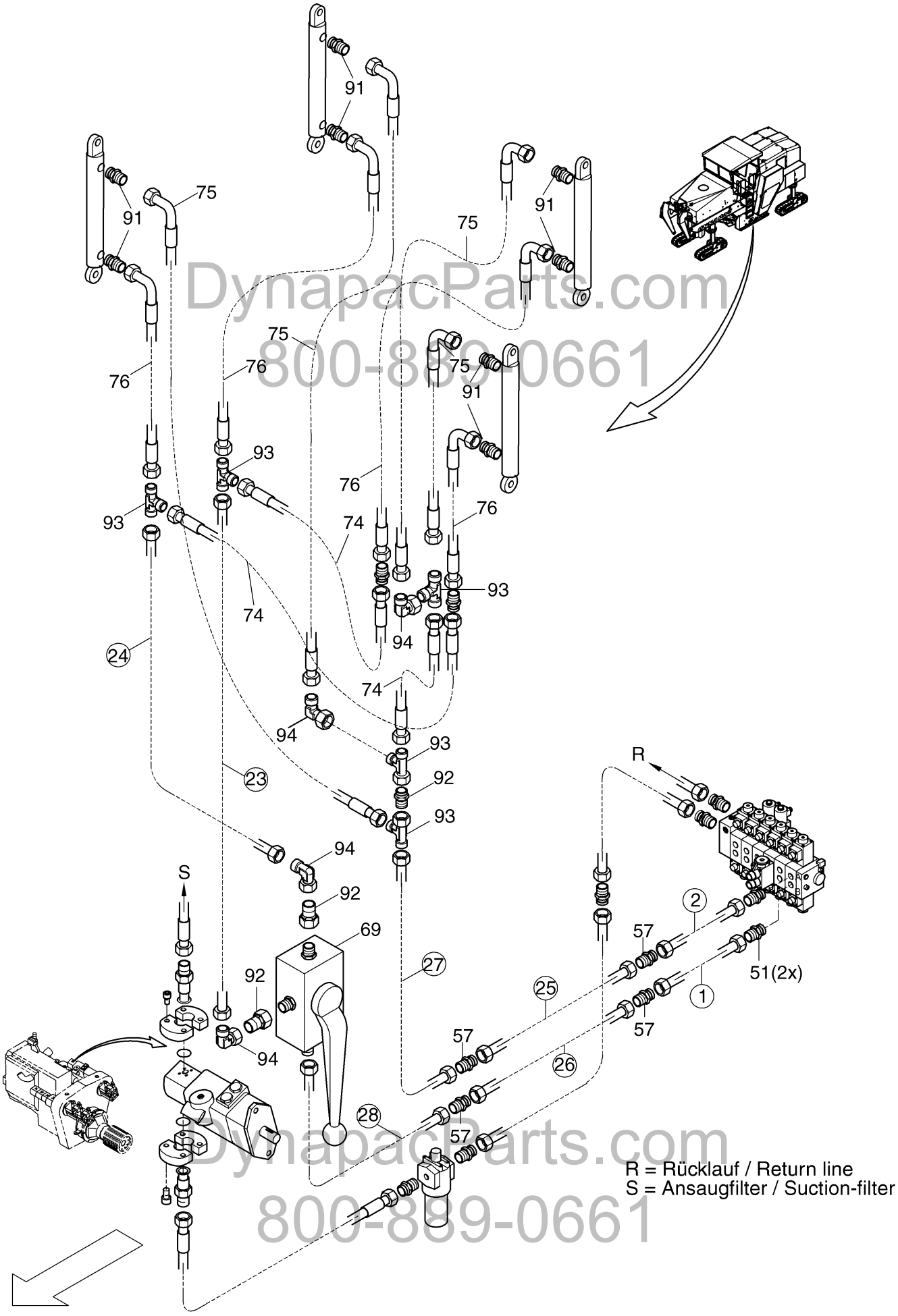

DynapacParts.com
800-889-0661

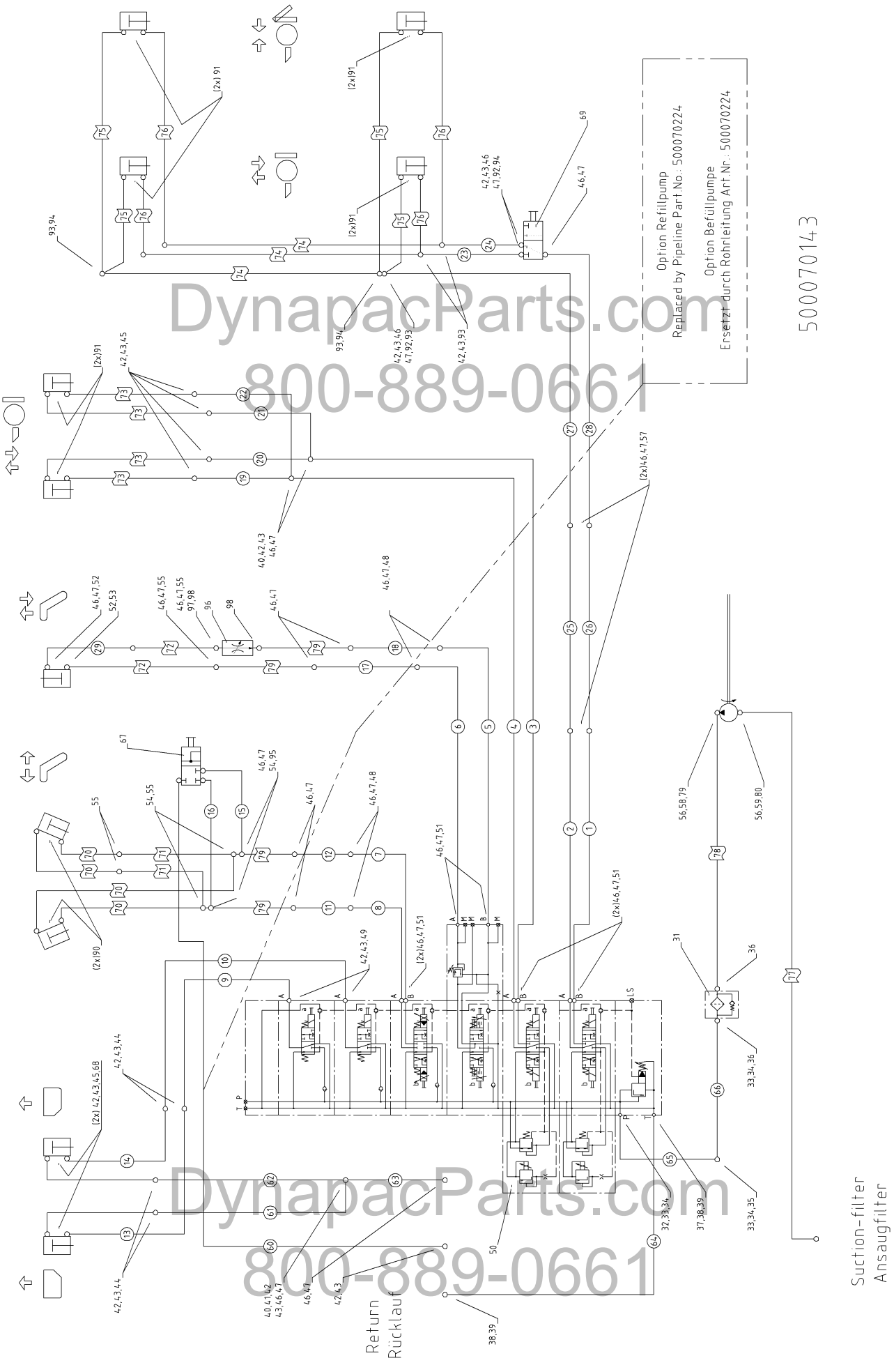

DynapacParts.com
800-889-0661

Pos. Item	Best.-Nr. Part No.	Anz. Qty.	Beschreibung Description	Bemerkung Note
	500070143		Steering 2	
1	500070257	1	Pipeline	
2	500070258	1	Pipeline	
3	500070259	1	Pipeline	
4	500070260	1	Pipeline	
5	500070261	1	Pipeline	
6	500070262	1	Pipeline	
7	500070263	1	Pipeline	
8	500070264	1	Pipeline	
9	500070265	1	Pipeline	
10	500070266	1	Pipeline	
11	500070267	1	Pipeline	
12	500070268	1	Pipeline	
13	500070269	1	Pipeline	
14	500070270	1	Pipeline	
15	500070271	1	Pipeline	
16	500070272	1	Pipeline	
17	500070273	1	Pipeline	
18	500070274	1	Pipeline	
19	500070275	1	Pipeline	
20	500070276	1	Pipeline	
21	500070277	1	Pipeline	
22	500070278	1	Pipeline	
23	500070279	1	Pipeline	
24	500070280	1	Pipeline	
25	500070281	1	Pipeline	
26	500070282	1	Pipeline	
27	500070283	1	Pipeline	
28	500070284	1	Pipeline	
29	500070294	1	Pipeline	
31	964013551	1	Filter	
32	961353030	1	Straight double-ended union	
33	961102021	4	Nut	
34	961102071	4	Cutting ring	
35	961903021	1	Straight coupling	
36	961935150	2	Straight double-ended union	
37	961935211	1	Straight double-ended union	
38	961102011	2	Union nut	
39	961102061	2	Cutting ring	
40	961982602	3	Reduction screwing	
41	961905008	3	Union tee	
42	961102006	22	Union nut	
43	961102056	22	Cutting ring	
44	961904006	8	Union elbow both ports	
45	961903006	5	Stud	
46	961102008	32	Union nut	

DynapacParts.com
800-889-0661
DynapacParts.com
800-889-0661

Pos. Item	Best.-Nr. Part No.	Anz. Qty.	Beschreibung Description	Bemerkung Note
47	961102058	32	Cutting ring	
48	961904008	6	Union elbow both ports	
49	961353008	2	Straight double-ended union	
50	963171001	1	Hydr. block	
51	961935208	8	Straight double-ended union	
52	961935108	2	Straight double-ended union	
53	961917008	3	Adjustable elbow	
54	961919008	4	Swivel nut run tee	
55	961907008	6	Bulkhead union elbow	
56	508029	8	Screw	
57	961903008	4	Straight coupling	
58	930211260	2	Flange half	
59	930211280	2	Flange half	
60	500070285	1	Pipeline	
61	500070286	1	Pipeline	
62	500070287	1	Pipeline	
63	500070288	1	Pipeline	
64	500070289	1	Pipeline	
65	500070290	1	Pipeline	
66	500070291	1	Pipeline	
67	930296451	1	Ball valve	
68	969181006	4	Straight screwing	
69	500070140	1	Scraper flap valve	
70	960840951	4	Hose	
71	960841804	2	Hose	
72	960841001	2	Hose	
73	960820451	4	Hose	
74	960822500	3	Hose	1800 mm
75	960821101	4	Hose	
76	960820921	2	Hose	
77	960884701	1	Hose	
78	960865397	1	Hose	
79	932323203	1	O-ring	
80	932323729	1	O-ring	
90	961134104	4	Straight double-ended union	
91	961934201	12	Straight double-ended union	
92	961983605	3	Reduction union	
93	961919006	5	Stud	
94	961917006	2	Union elbow both ports	
95	961983606	2	Reduction union	
96	963076600	1	Flow control adjustable	
97	969181008	1	Intermediate stud	
98	961134104	2	Straight double-ended union	

DynapacParts.com
800-889-0661
DynapacParts.com
800-889-0661

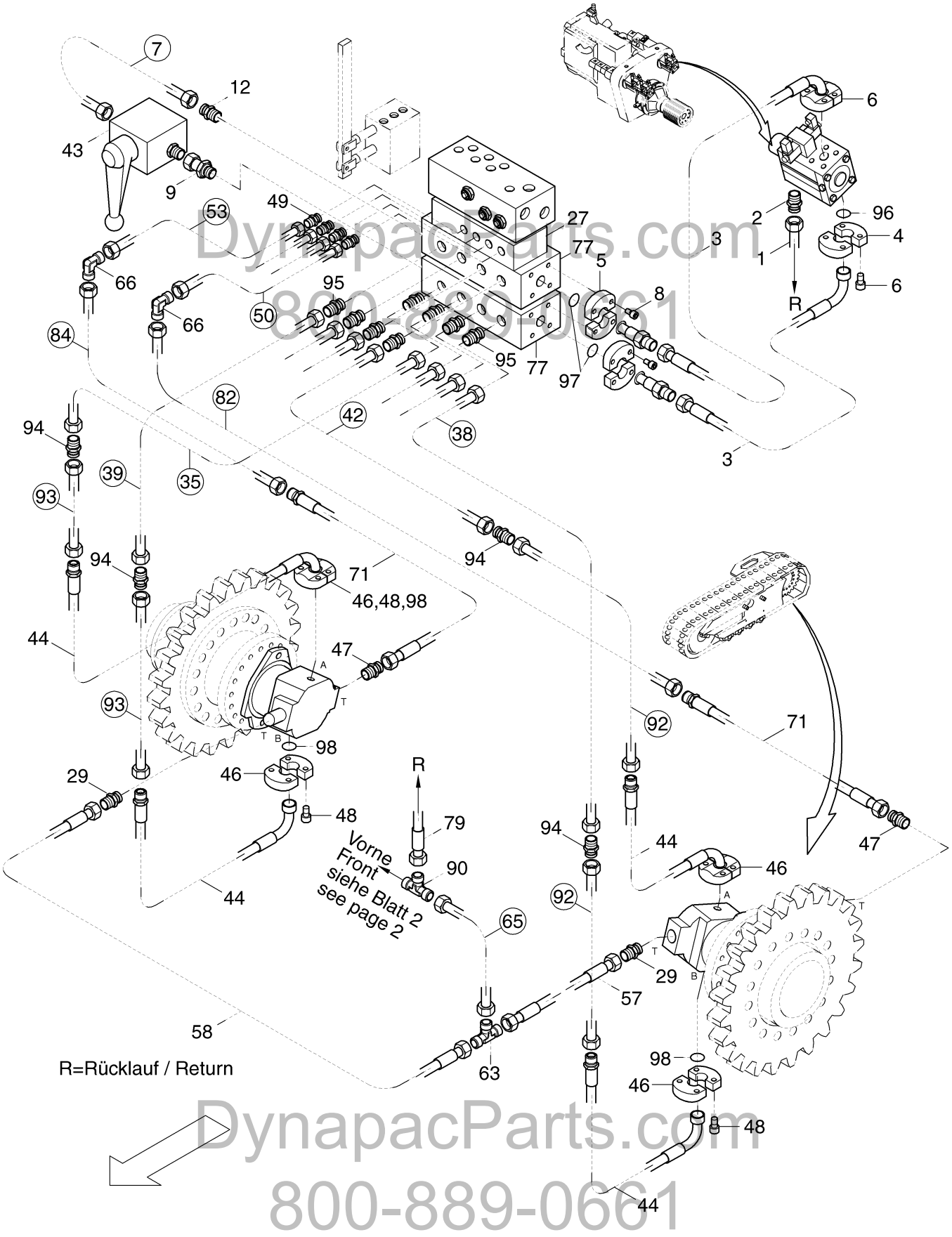

DynapacParts.com
800-889-0661

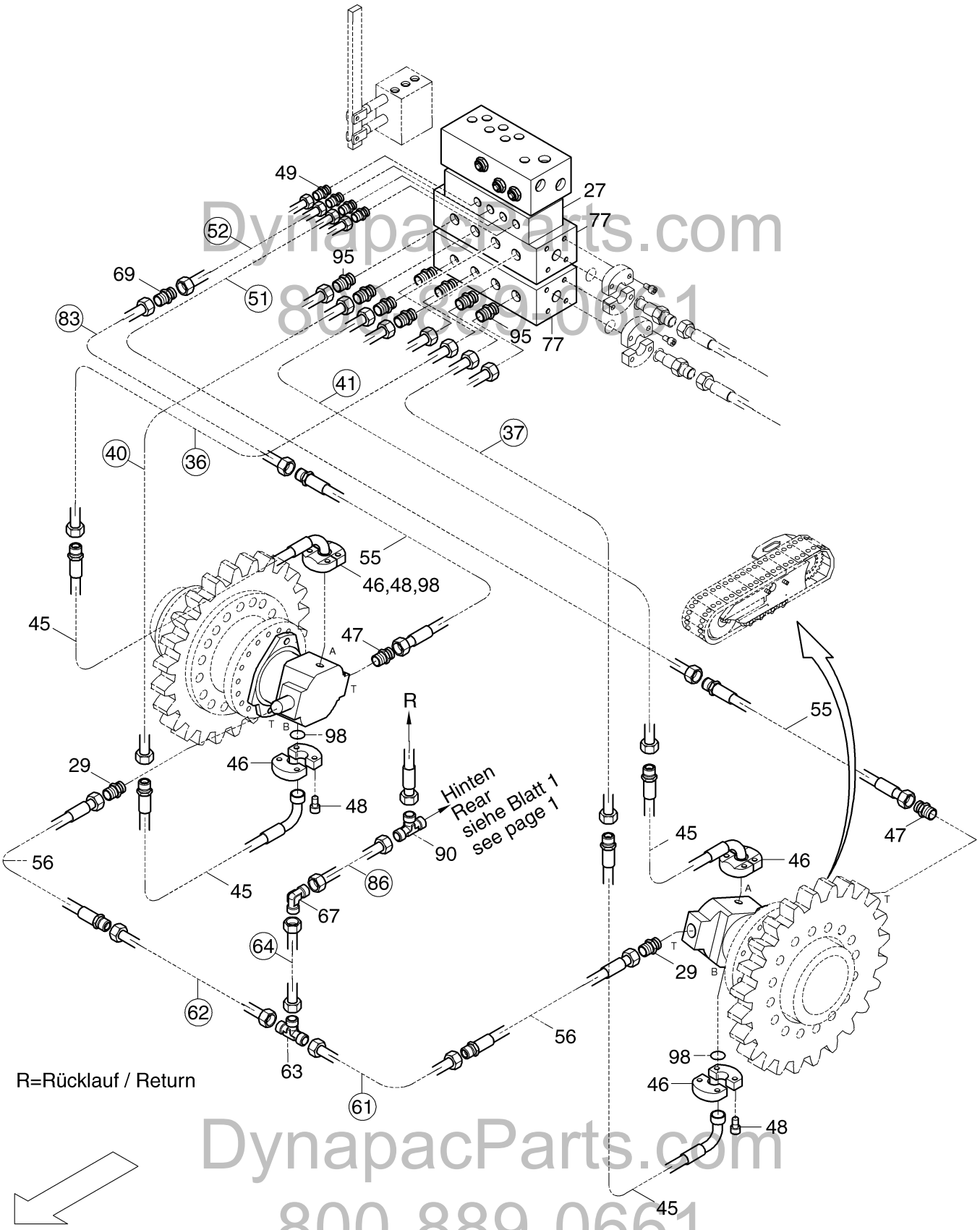

DynapacParts.com
800-889-0661

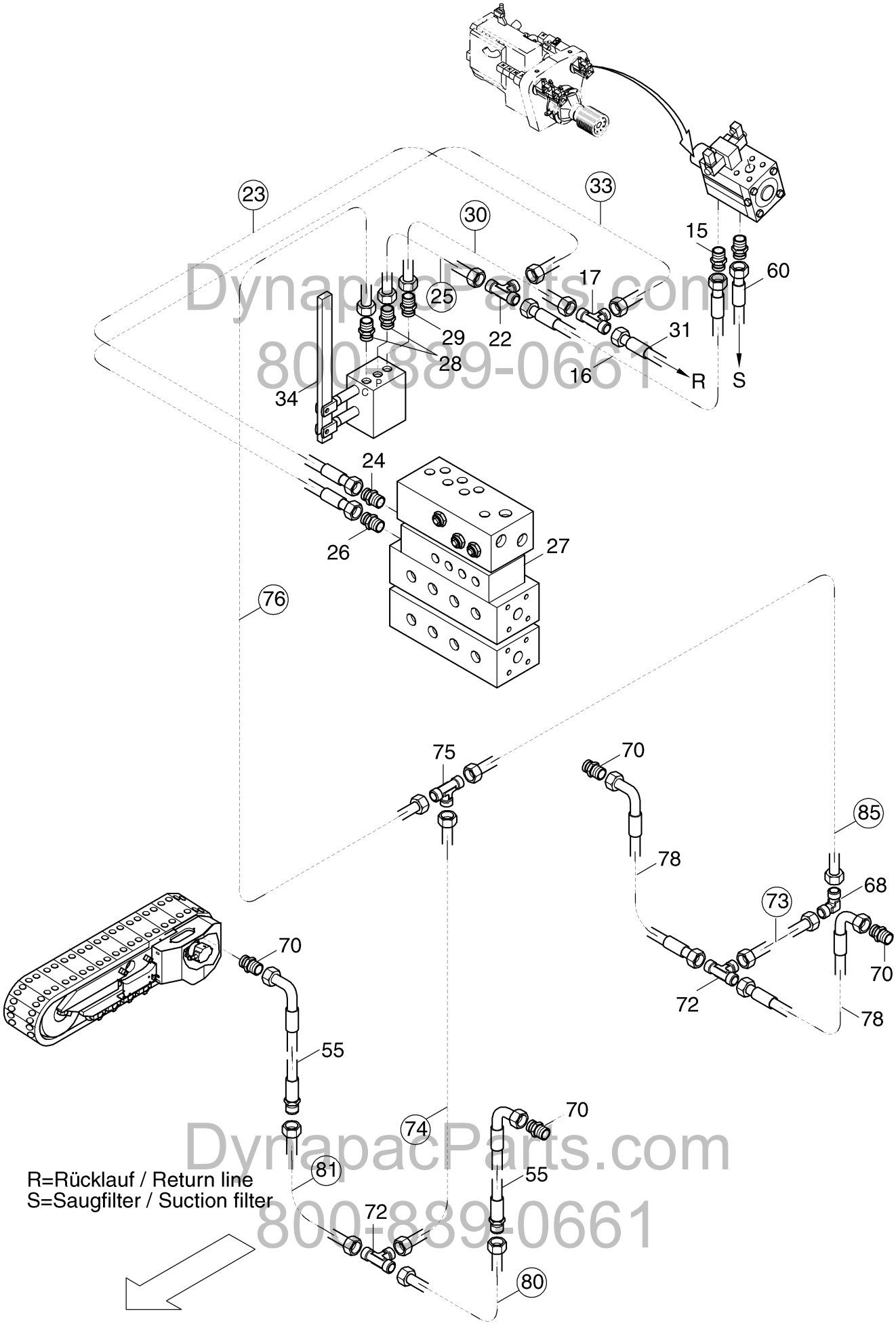

DynapacParts.com
800-889-0661

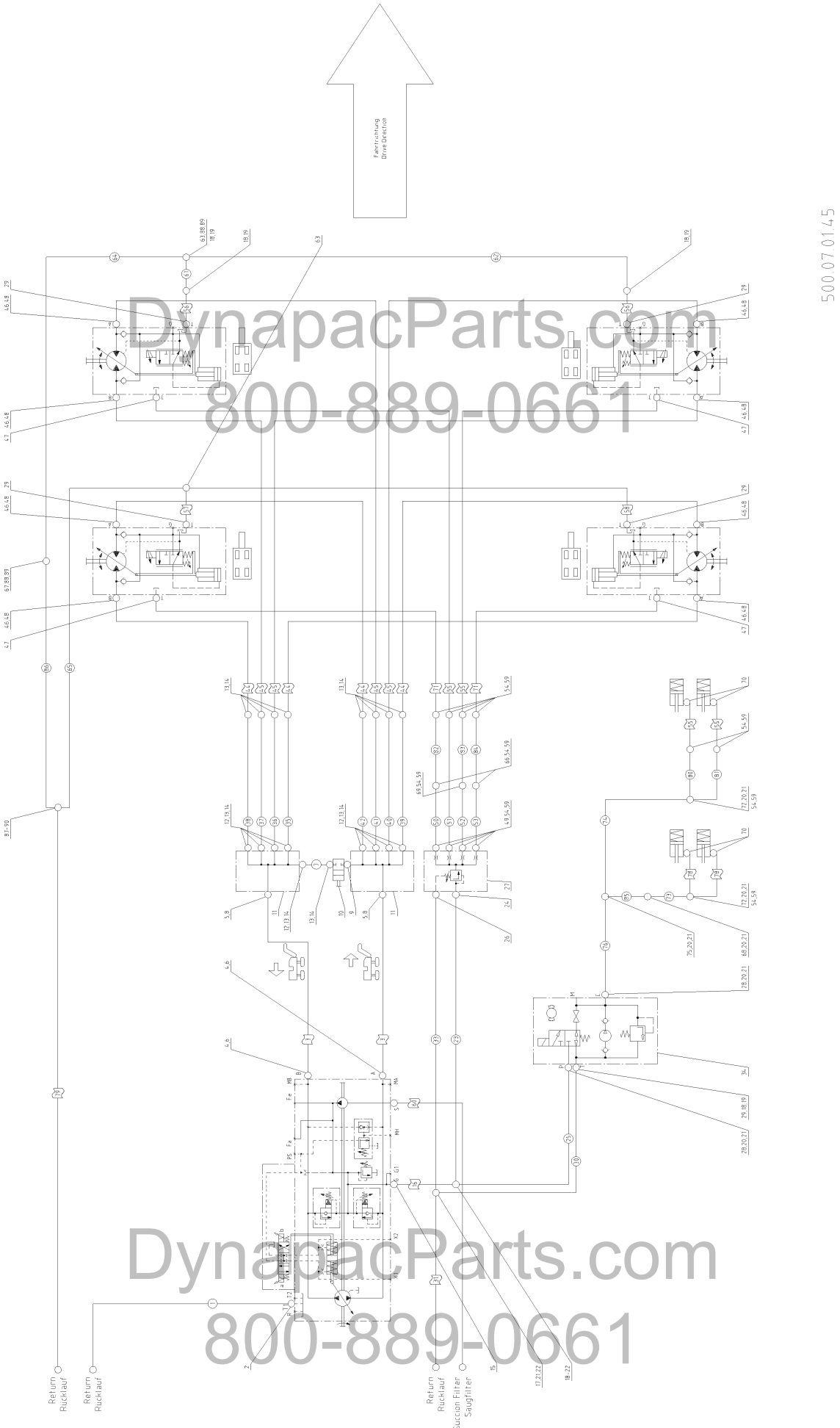

DynapacParts.com
800-889-0661

DynapacParts.com
800-889-0661

500.07.01.45

Pos. Item	Best.-Nr. Part No.	Anz. Qty.	Beschreibung Description	Bemerkung Note
	500070145		Drive	
1	960872807	1	Hose	
2	961935211	1	Straight double-ended union	
3	960886625	2	Hose	
4	930211285	4	Flange half	
5	930211288	4	Flange half	
6	928791	8	Cylinder screw	
7	500070160	1	Pipeline	
8	937932443	8	Cylinder screw	
9	961154121	1	Male connector for swivel nut	
10	961102022	24	Nut	
11	961102072	24	Cutting ring	
12	961935121	1	Straight double-ended union	
13	961102021	2	Nut	
14	961102071	2	Cutting ring	
15	961935228	1	Straight double-ended union	
16	960855781	1	Hose	
17	961982612	1	T-Reducer screwing	
18	961102009	6	Nut	
19	961102059	6	Cutting ring	
20	961102008	12	Union nut	
21	961102058	12	Cutting ring	
22	961982625	1	Reduction union	
23	969181009	1	Straight screwing	
24	961935109	1	Straight screwing	
25	500070151	1	Pipeline	
26	961935104	1	Straight double-ended union	
27	963173203	1	Hydr. block	
28	961935207	2	Straight double-ended union	
29	961935209	5	Stud	
30	500070152	1	Pipeline	
31	960851060	1	Hose	
32	961903022	4	Straight coupling	
33	969181008	1	Intermediate stud	
34	963155700	1	Handpump	
_01	963155704	1	_Valve	
_02	960644917	1	_Magnet	
35	500070176	1	Pipeline	
36	500070177	1	Pipeline	
37	500070178	1	Pipeline	
38	500070179	1	Pipeline	
39	500070156	1	Pipeline	
40	500070157	1	Pipeline	
41	500070158	1	Pipeline	
42	500070159	1	Pipeline	
43	930296453	1	Ball valve	

DynapacParts.com
800-889-0661
DynapacParts.com
800-889-0661

Pos. Item	Best.-Nr. Part No.	Anz. Qty.	Beschreibung Description	Bemerkung Note
44	960875290	4	Hose	
45	960876398	4	Hose	
46	930211260	16	Flange half	
47	961934201	4	Straight double-ended union	
48	508053	32	Cylinder screw	
49	961935106	4	Stud	
50	500070161	1	Pipeline	
51	500070162	1	Pipeline	
52	500070163	1	Pipeline	
53	500070164	1	Pipeline	
54	961102006	20	Union nut	
55	960823473	4	Hose	
56	960855277	2	Hose	
57	960854501	1	Hose	
58	960854502	1	Hose	
59	961102056	20	Cutting ring	
60	960892581	1	Hose	
61	500070165	1	Pipeline	
62	500070166	1	Pipeline	
63	961982615	2	Reduction union	
64	500070168	1	Pipeline	
65	500070167	1	Pipeline	
66	961904006	2	Union elbow both ports	
67	961904011	1	Union elbow both ports	
68	961904008	1	Union elbow both ports	
69	961903006	1	Stud	
70	961935206	4	Straight screwing	
71	960823251	2	Hose	
72	961982602	2	Reduction screwing	
73	500070170	1	Pipeline	
74	500070171	1	Pipeline	
75	961905008	1	Union tee	
76	500070169	1	Pipeline	
77	963173202	2	Hydr. block	
78	960823603	2	Hose	
79	960881910	1	Hose	
80	500070172	1	Pipeline	
81	500070173	1	Pipeline	
82	500070209	1	Pipeline	
83	500070210	1	Pipeline	
84	500070211	1	Pipeline	
85	500070212	1	Pipeline	
86	500070213	1	Pipeline	
87	961121020	1	Reduction screwing	
88	961102011	7	Union nut	
89	961102061	7	Cutting ring	

DynapacParts.com
800-889-0661

Pos. Item	Best.-Nr. Part No.	Anz. Qty.	Beschreibung Description	Bemerkung Note
90	961905011	1	Equal-tee	
92	500070253	1	Pipeline	
93	500070254	1	Pipeline	
94	961903022	1	Straight coupling	
95	961134125	1	Straight double-ended union	
96	932323729	2	O-ring	
97	932323744	2	O-ring	
98	932323203	8	O-ring	

DynapacParts.com
800-889-0661

DynapacParts.com
800-889-0661

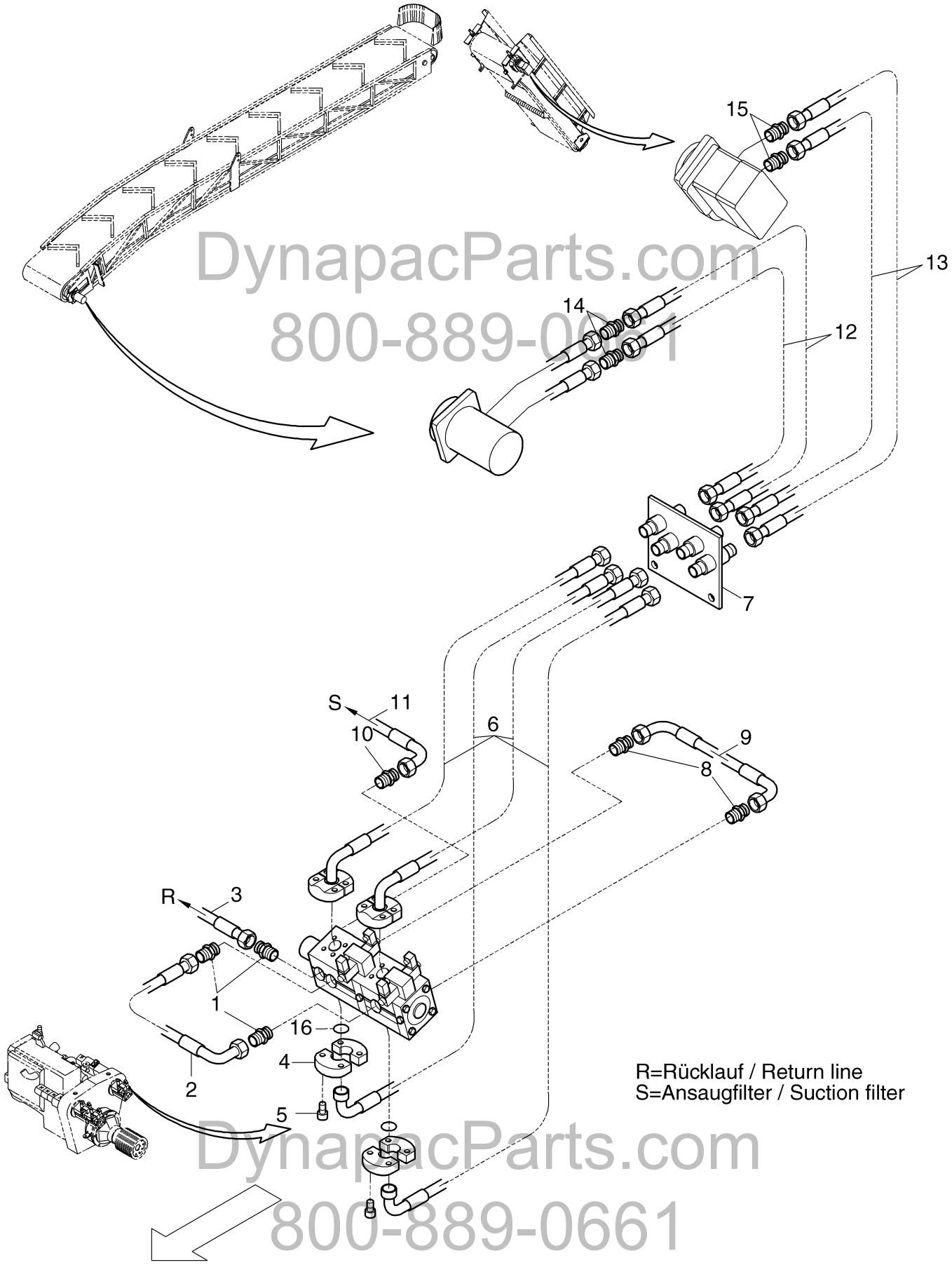

DynapacParts.com
800-889-0661

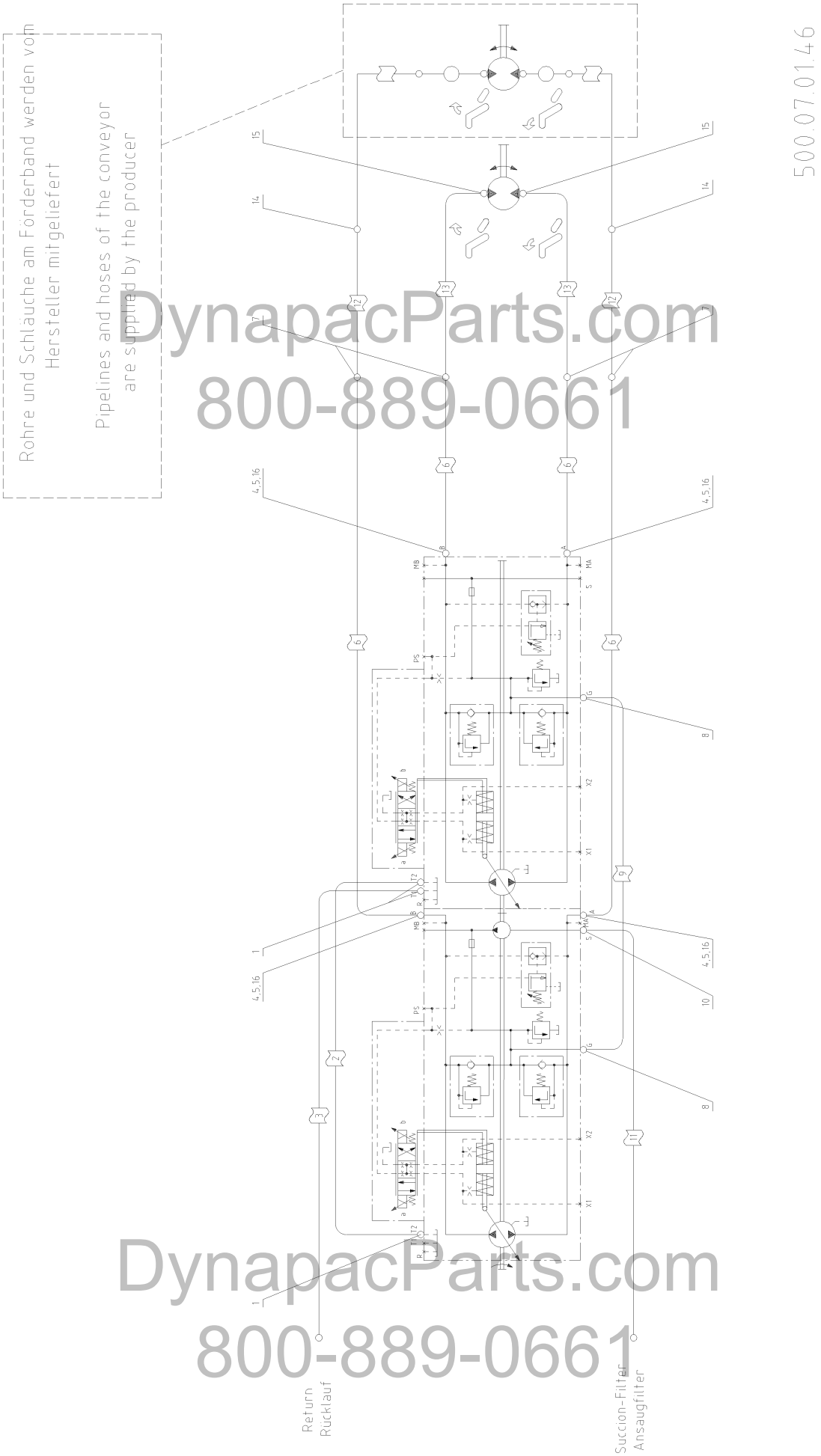

DynapacParts.com
800-889-0661
DynapacParts.com
800-889-0661

Pos. Item	Best.-Nr. Part No.	Anz. Qty.	Beschreibung Description	Bemerkung Note
	500070146		Belt drive	
1	961935210	3	Straight double-ended union	
2	960860753	1	Hose	
3	960862410	1	Hose	
4	930211260	8	Flange half	
5	508053	8	Cylinder screw	
6	960865392	4	Hose	
7	500070227	1	Plate	
8	961935228	2	Straight double-ended union	
9	960840253	1	Hose	
10	961935212	1	Straight double-ended union	
11	960892607	1	Hose	
12	960863677	2	Hose	
13	960861275	2	Hose	
14	961903021	2	Straight coupling	
15	961935121	2	Straight double-ended union	
16	932323203	4	O-ring	

DynapacParts.com
800-889-0661

DynapacParts.com
800-889-0661

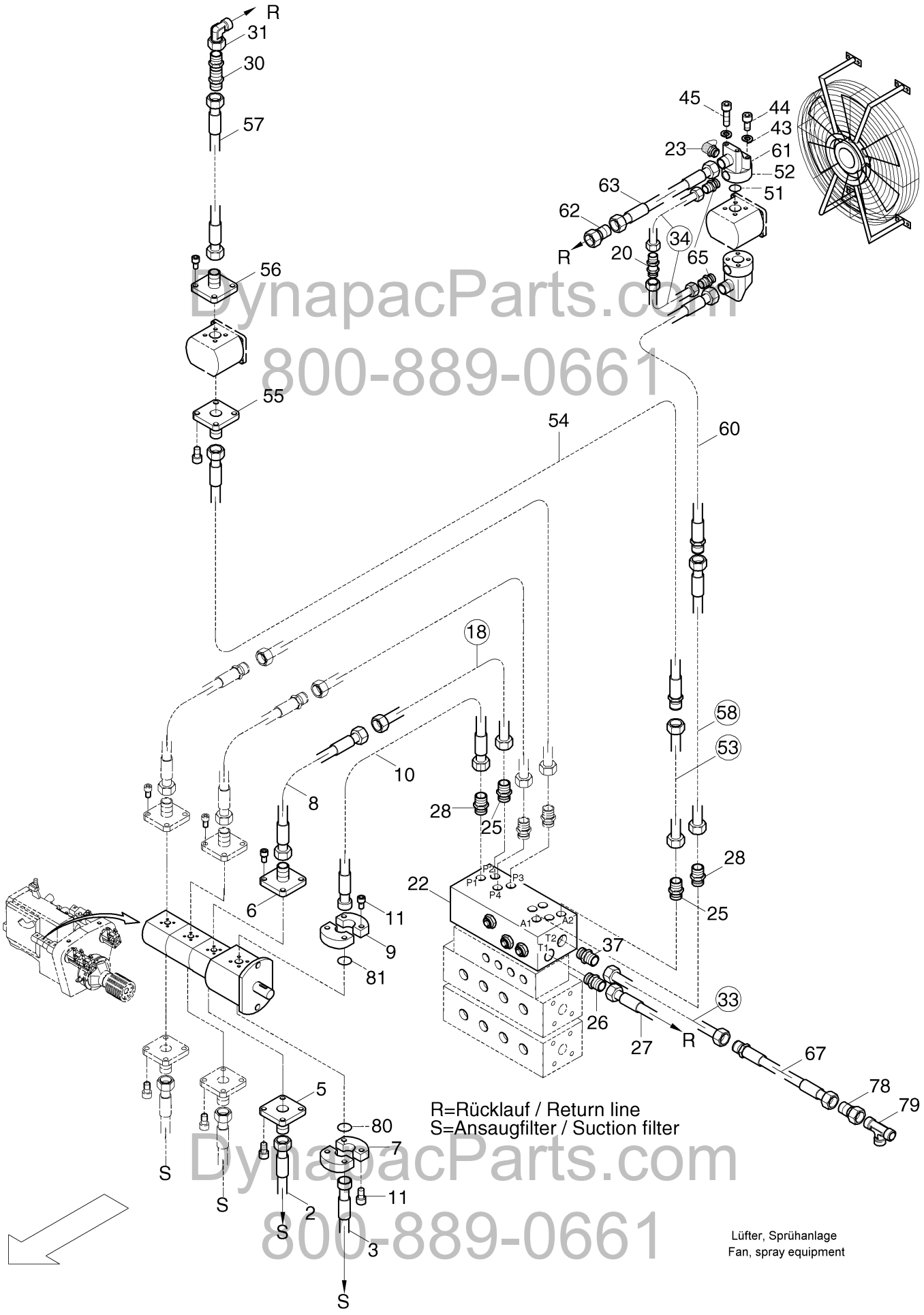

DynapacParts.com
800-889-0661
DynapacParts.com
800-889-0661

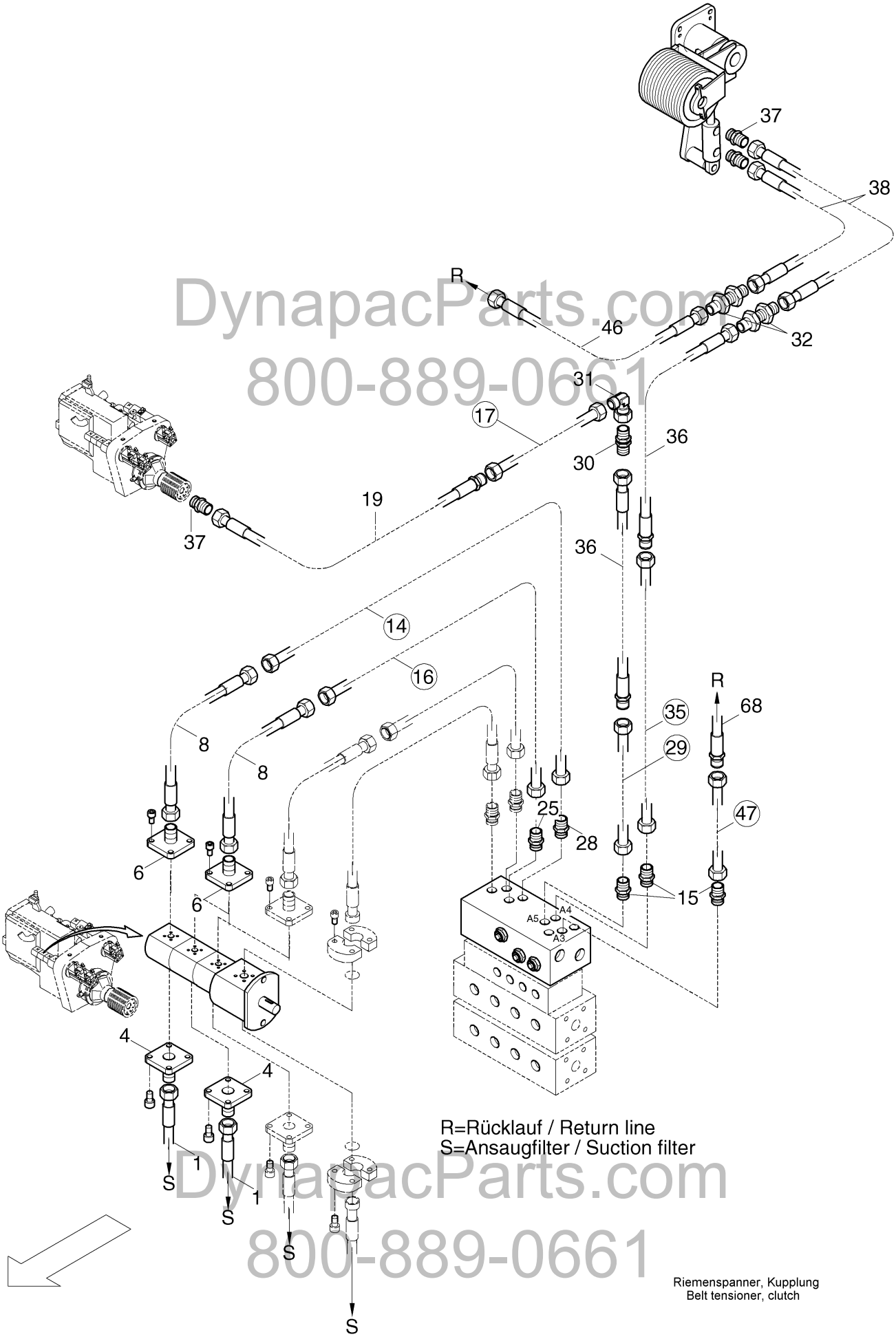

DynapacParts.com
800-889-0661
DynapacParts.com
800-889-0661

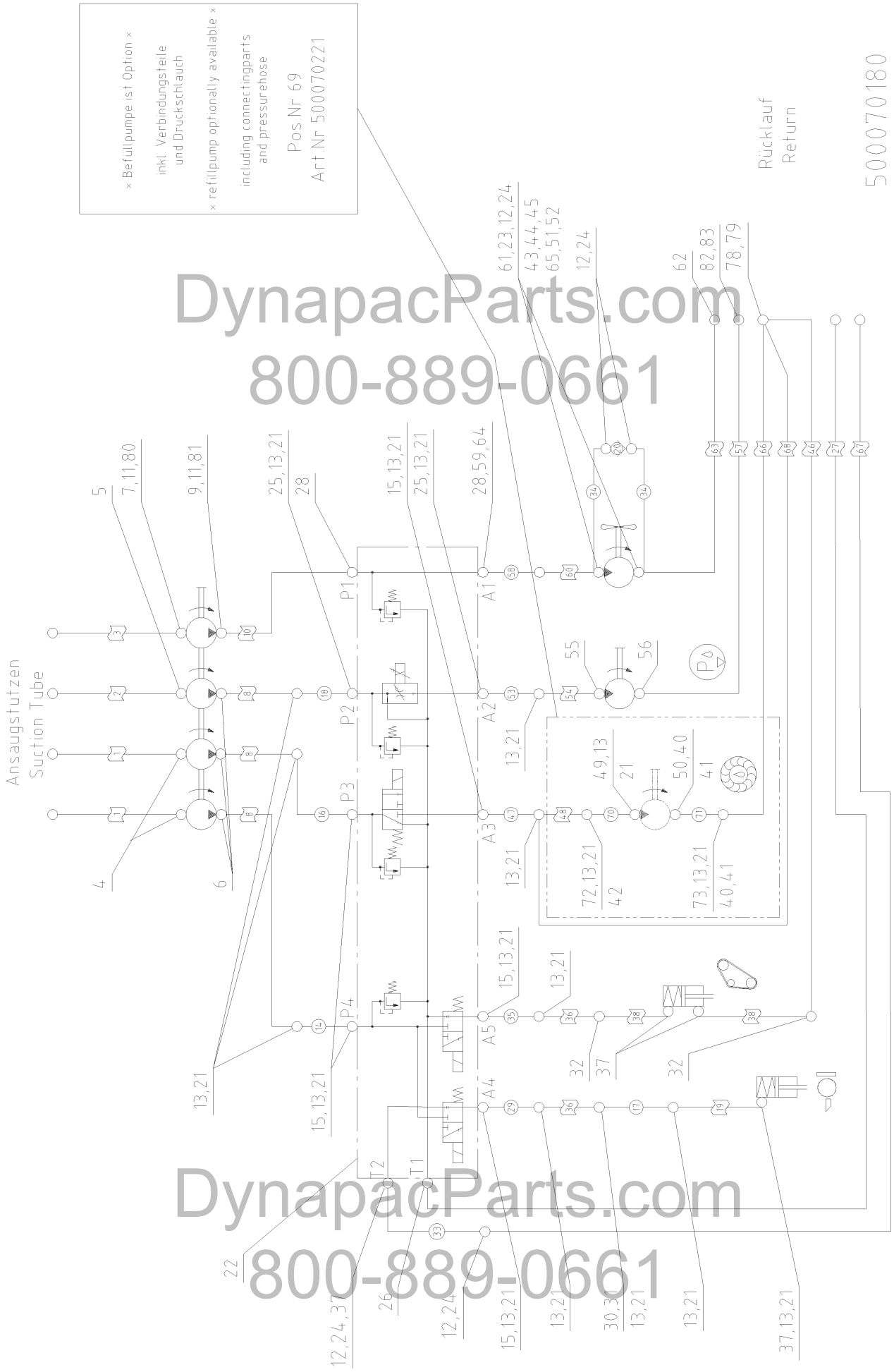

DynapacParts.com
800-889-0661
DynapacParts.com
800-889-0661

Pos. Item	Best.-Nr. Part No.	Anz. Qty.	Beschreibung Description	Bemerkung Note
	500070180		Rotation drives	
1	960861523	2	Hose	1000 mm
2	960881701	1	Hose	1000 mm
3	960881702	1	Hose	1000 mm
4	961371068	2	Flange screwing	
5	961371069	1	Screwing	
6	961371065	3	Flange screwing	
7	930211280	2	Flange half	
8	960845200	3	Hose	
9	930211255	2	Flange half	
10	960864801	1	Hose	
11	508053	8	Cylinder screw	
12	961102006	6	Union nut	
13	961102008	15	Union nut	
14	500070183	1	Pipeline	
15	961935108	5	Straight double-ended union	
16	500070184	1	Pipeline	
17	500070218	1	Pipeline	
18	500070185	1	Pipeline	
19	960820450	1	Hose	
20	500070219	1	Non return valve	
21	961102058	15	Cutting ring	
22	963173201	1	Hydr. block	
23	961772617	2	Test connector	
24	961102056	6	Cutting ring	
25	961951084	2	Straight double-ended union	
26	961935112	1	Straight double-ended union	
27	960887601	1	Hose	
28	961935121	2	Straight double-ended union	
29	500070215	1	Pipeline	
30	500070226	1	Screwing with orifice	
31	961117010	1	Swivel nut elbow	
32	961906006	2	Bulk head union	
33	500070295	1	Pipeline	
34	500070220	2	Pipeline	
35	500070217	1	Pipeline	
36	960822212	2	Hose	1650 mm
37	961935106	4	Stud	
38	960821005	2	Hose	
43	49900161	8	Screw retention	
44	937930285	4	Screw	
45	508078	4	Screw	
46	960821702	1	Hose	
47	500070216	1	Pipeline	
51	932213216	2	O-ring	
52	500070201	2	Stud	

DynapacParts.com
800-889-0661
DynapacParts.com
800-889-0661

Pos. Item	Best.-Nr. Part No.	Anz. Qty.	Beschreibung Description	Bemerkung Note
53	500070195	1	Pipeline	
54	960842800	1	Hose	
55	961371065	1	Flange screwing	
56	961371067	1	Flange screwing	
57	960854455	1	Hose	2200 mm
58	500070194	1	Pipeline	
59	961102021	2	Nut	
60	960865389	1	Hose	
61	961371023	2	Flange screwing	
62	961183622	1	Reduction union	
63	960871432	1	Hose	
64	961102071	2	Cutting ring	
65	961935208	2	Straight double-ended union	
66	960856175	1	Hose	
67	960825275	1	Hose	
68	960845601	1	Hose	
69	500-07161	1	**Fill pump (Option)**	
78	961983608	1	Reduction union	
79	961919009	1	Swivel nut run tee	
80	932323729	1	O-ring	
81	932323203	1	O-ring	
82	961917010	1	Union elbow both ports	
83	961920615	1	Reduction union	

DynapacParts.com
800-889-0661

DynapacParts.com
800-889-0661

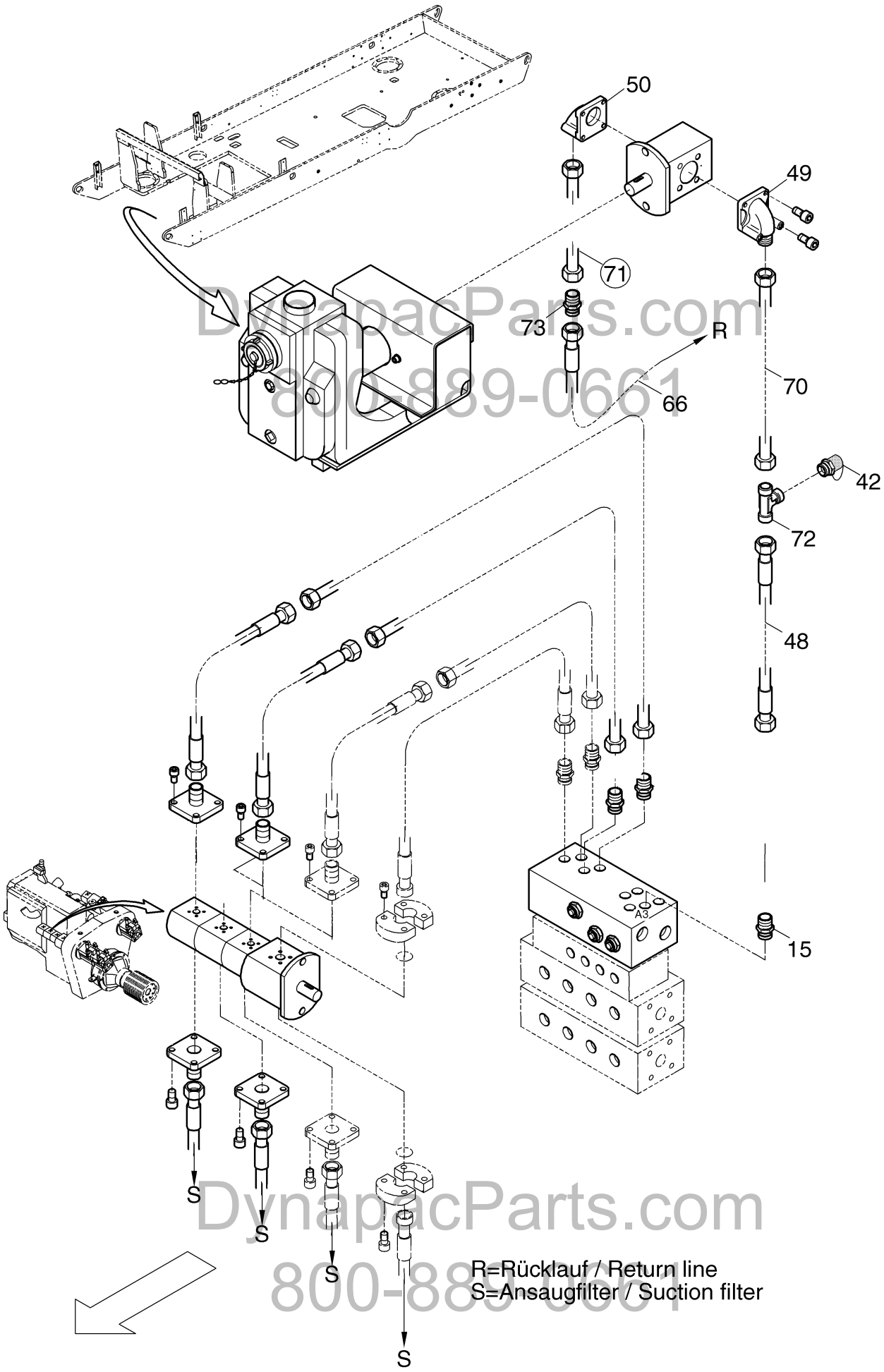

DynapacParts.com
800-889-0661

R=Rücklauf / Return line
S=Ansaugfilter / Suction filter

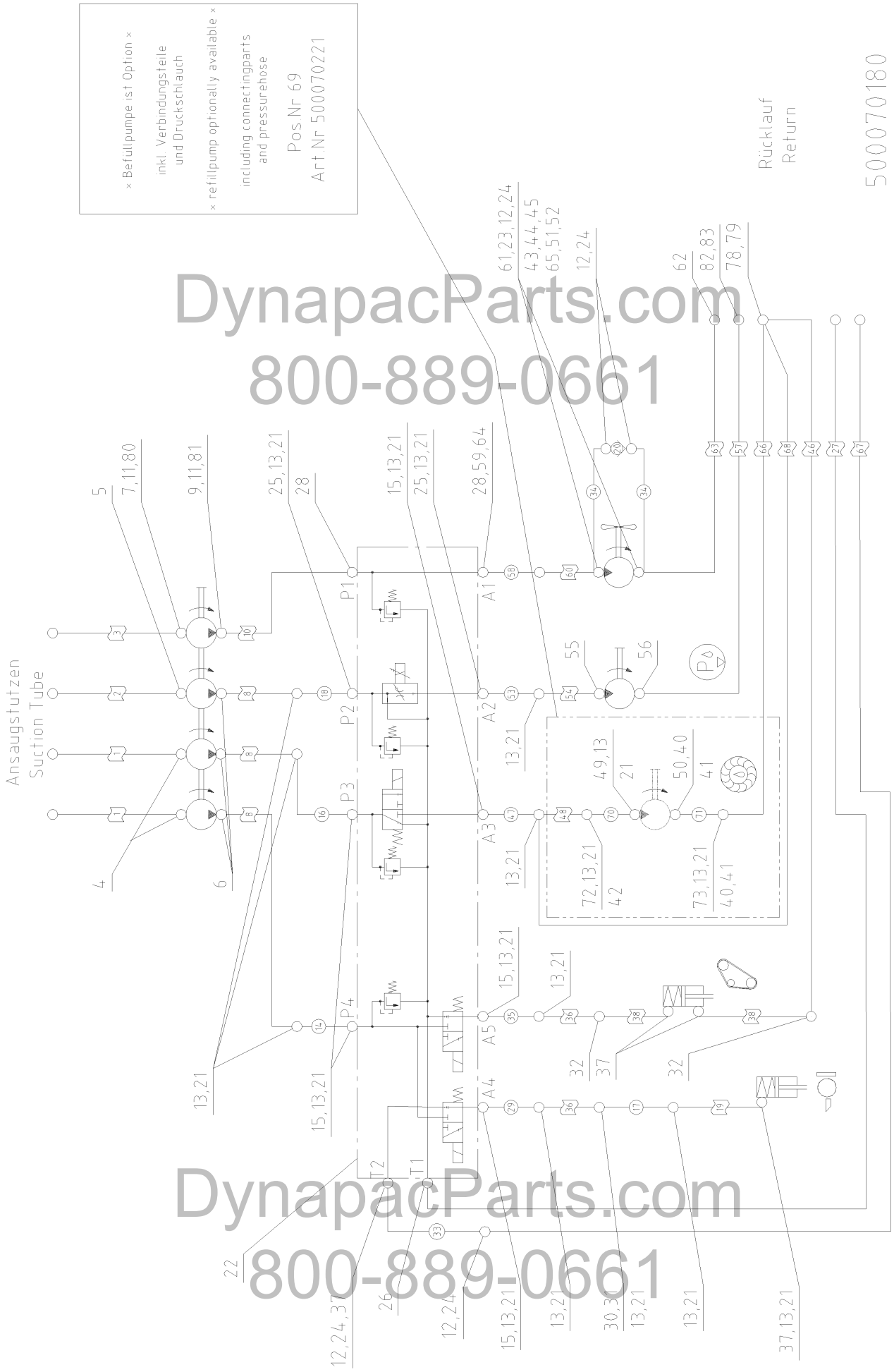

DynapacParts.com
800-889-0661
DynapacParts.com
800-889-0661

Pos. Item	Best.-Nr. Part No.	Anz. Qty.	Beschreibung Description	Bemerkung Note
	500070221		Fill pump (Option)	
13	961102008	4	Union nut	
21	961102058	4	Cutting ring	
40	961102009	2	Nut	
41	961102059	2	Cutting ring	
42	961772620	1	Test connector	
49	961371071	1	Angle flange screwing	
50	961371073	1	Screwing	
66	960856175	1	Hose	
70	500070222	1	Pipeline	
71	500070223	1	Pipeline	
72	961905008	1	Union tee	
73	961982612	1	T-Reducer screwing	

DynapacParts.com
800-889-0661

DynapacParts.com
800-889-0661

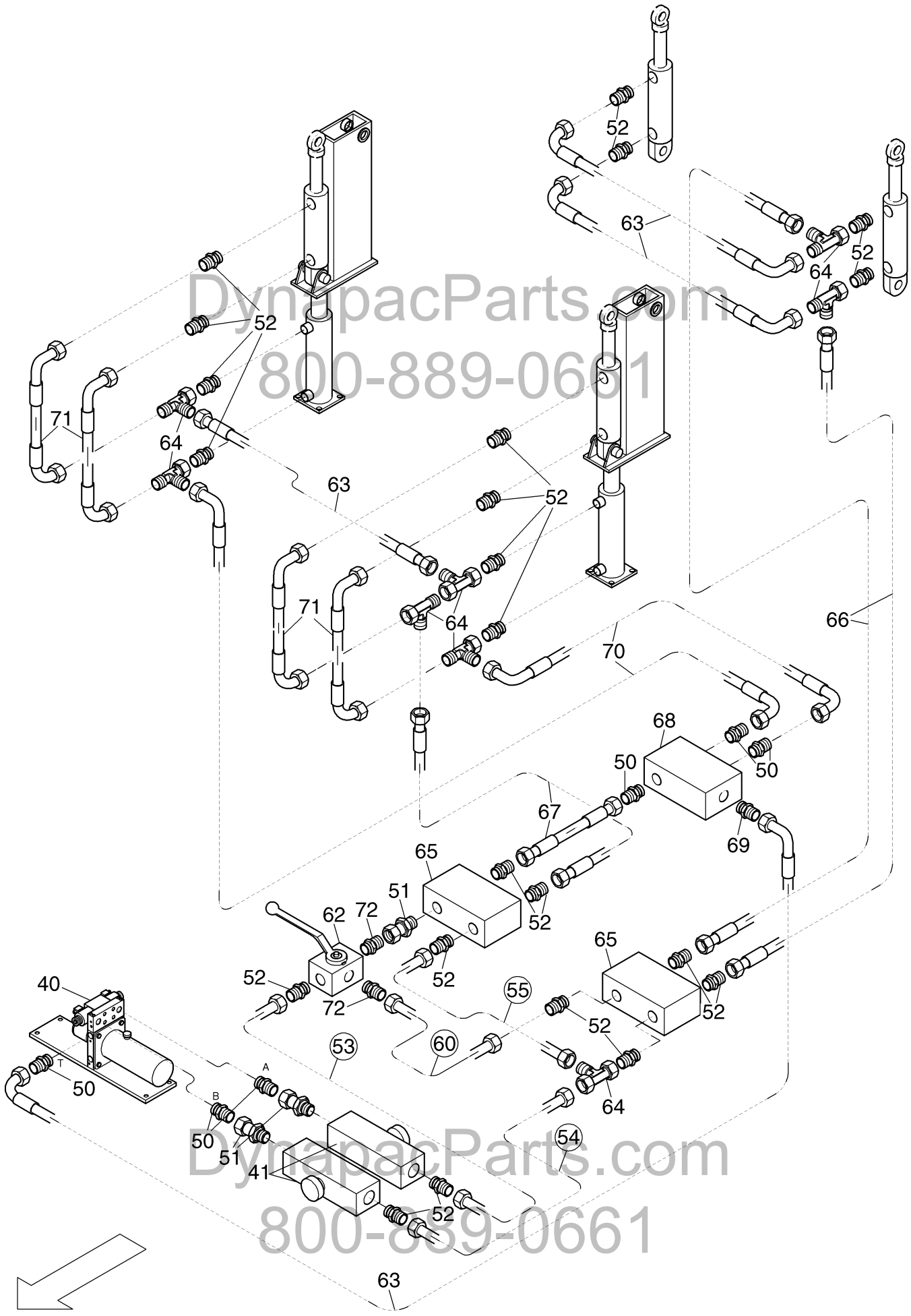

DynapacParts.com
800-889-0661

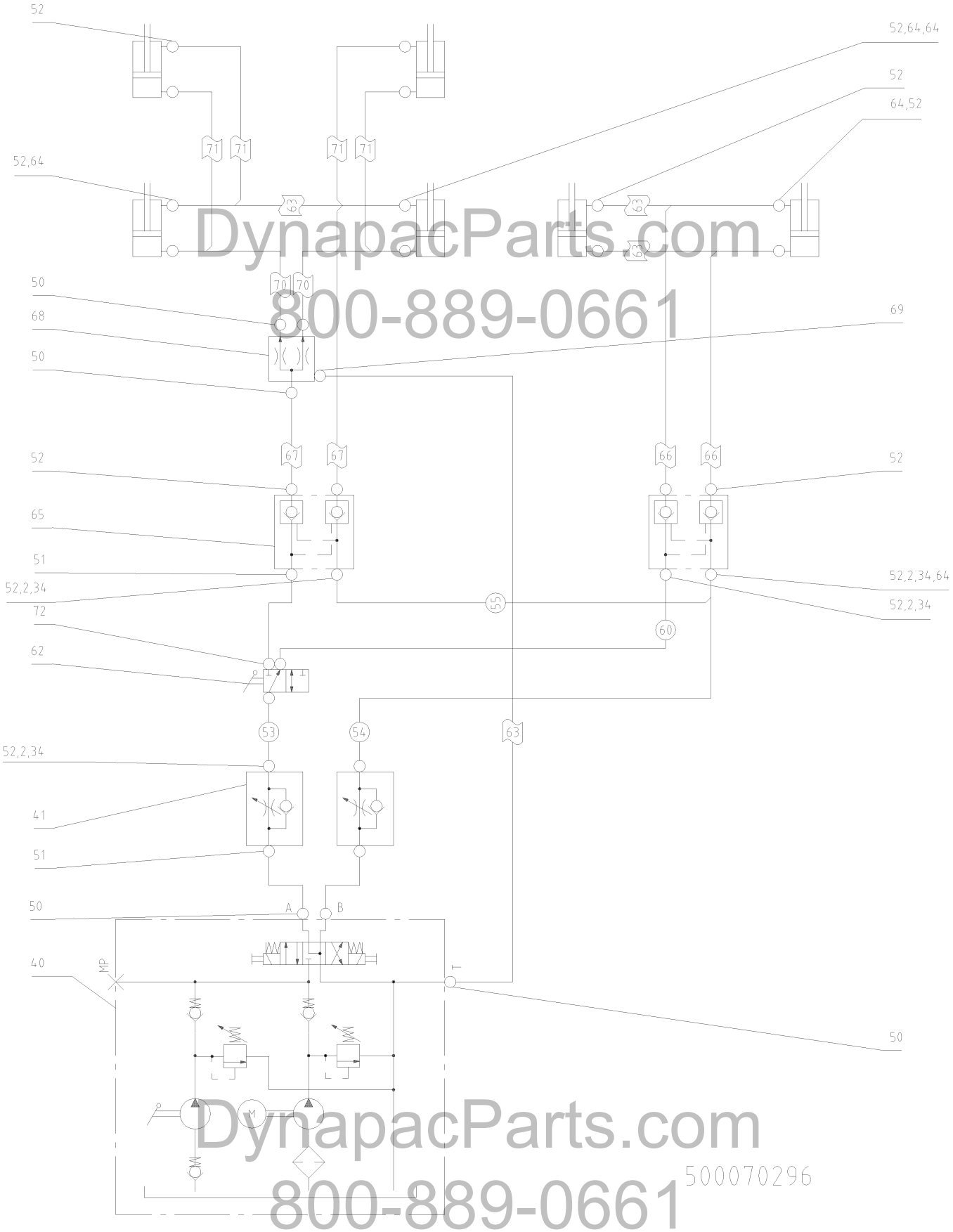

DynapacParts.com
800-889-0661

Pos. Item	Best.-Nr. Part No.	Anz. Qty.	Beschreibung Description	Bemerkung Note
	500070296		Compact aggregat	
2	961102056	9	Cutting ring	
34	961102006	9	Union nut	
40	967120010	1	Hydraulic aggregat	
41	963076600	2	Flow control adjustable	
50	961934103	6	Straight double-ended union	
51	961954106	7	Stud	
52	961934106	15	Straight double-ended union	
53	500070297	1	Pipeline	
54	500070298	1	Pipeline	
55	500070299	1	Pipeline	
60	500070303	1	Pipeline	
62	930296451	1	Ball valve	
63	960822902	4	Hose	
64	961919006	8	Stud	
65	963106500	2	Non return valve	
66	960821612	2	Hose	1250 mm
67	960823600	2	Hose	2400 mm
68	963081215	1	Flow divider	
69	961935141	1	Straight double-ended union	
70	960821801	2	Hose	1350 mm
71	960821006	4	Hose	850 mm
72	961935141	3	Straight double-ended union	

DynapacParts.com
800-889-0661

DynapacParts.com
800-889-0661

Pos. Item	Best.-Nr. Part No.	Anz. Qty.	Beschreibung Description	Bemerkung Note
	500-08110	1	**Operating stand guide**	
	500-08130	1	**Input**	
	500-08150	1	**Clamp box, compl.**	
	500-08160	1	**Clamp box, compl.**	
	500-08170	1	**Switch box for cameras**	
	500-08301	1	**Electric survey 2**	
	500-08302	1	**Electric survey 3**	

DynapacParts.com
800-889-0661

DynapacParts.com
800-889-0661

Electric equipment compl.

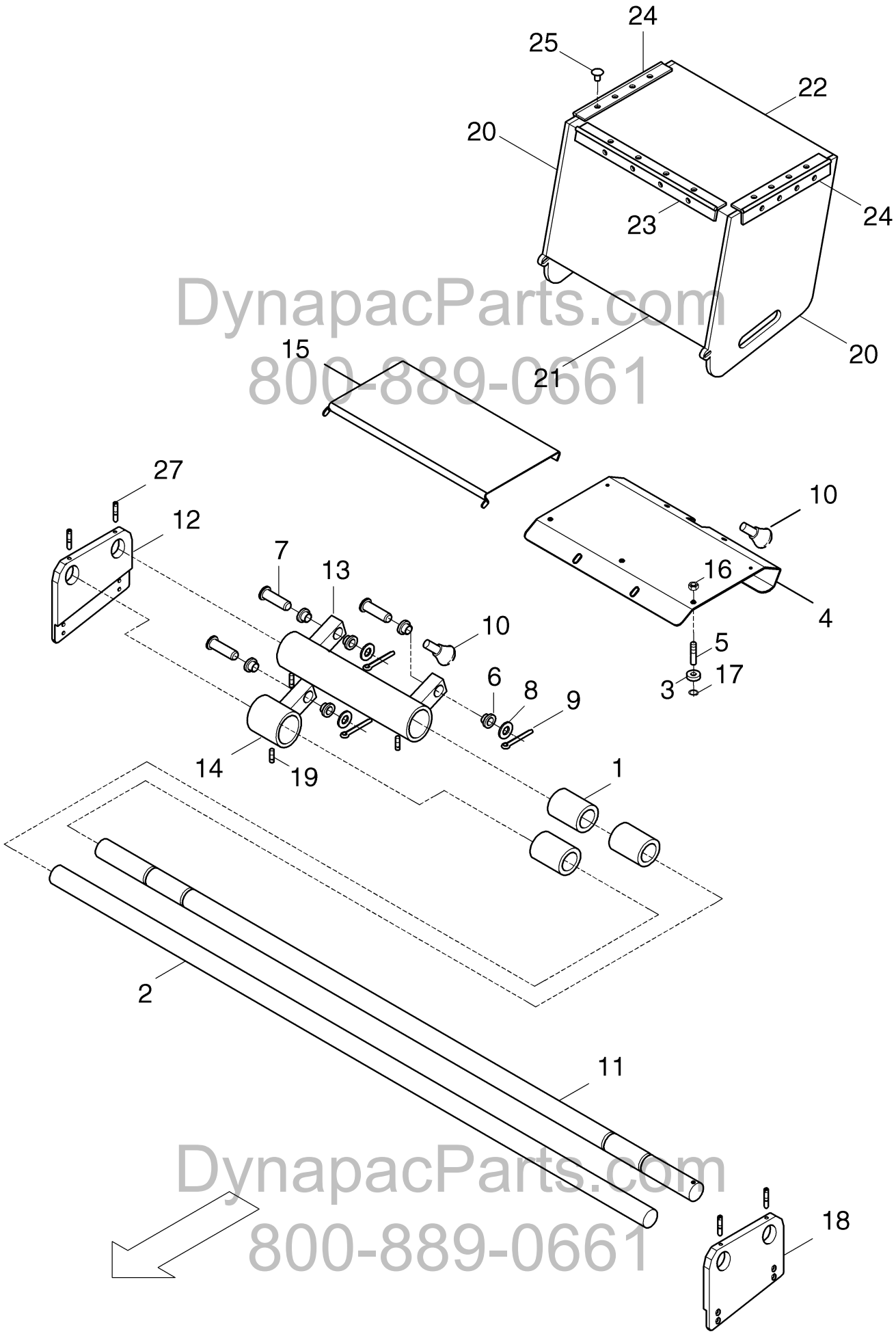

DynapacParts.com
800-889-0661
DynapacParts.com
800-889-0661

Pos. Item	Best.-Nr. Part No.	Anz. Qty.	Beschreibung Description	Bemerkung Note
1	930229318	3	Linear sliding bearing	
2	314001155	1	Round steel	
3	935229752	7	Roller	
4	500080103	1	Rearwall	
5	500080106	7	Bolt	
6	935234611	6	Sliding bearing	
7	938600314	3	Bolt	
8	938600025	3	Disc	
9	630021	3	Split pin	
10	930404706	2	Stop bolt	
11	500080109	1	Rod	
12	500080114	1	Guide support, right	
13	500080112	1	Support, rear	
14	500080113	1	Support, front	
15	500080111	1	Glide plate	
16	937180513	7	Nut	
17	936000670	7	Circlip	
18	500080115	1	Guide support, left	
19	937954652	4	Threaded pin	
	500080271	1	Cover compl. to consist of Item 20 to 25	
20	500080272	2	Side plate	
21	500802273	1	Front plate	
22	500080275	1	Cover plate	
23	500080278	1	Hinge 1	
24	500080277	2	Hinge 2	
25	49302039	30	Rivet	
27	937954652	4	Threaded pin	

DynapacParts.com
800-889-0661

DynapacParts.com
800-889-0661

DynapacParts.com
800-889-0661

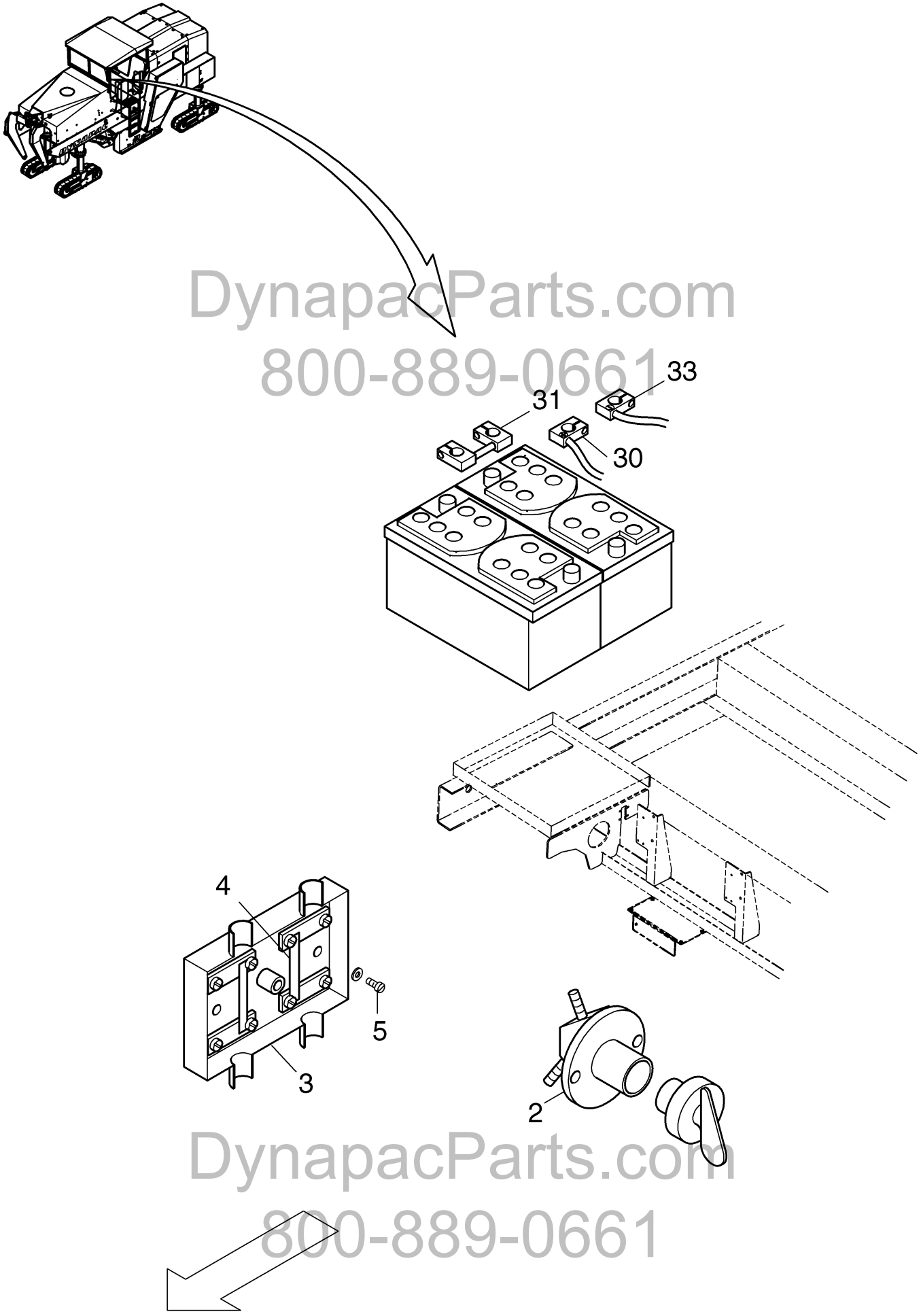

DynapacParts.com
800-889-0661

Pos. Item	Best.-Nr. Part No.	Anz. Qty.	Beschreibung Description	Bemerkung Note
2	49100415	1	Battery disconnect lever	
_01	49600124	1	_key	
3	977455756	1	Fuse box	
4	977453076	2	Fuse	100 Amp.
5	533025	2	Screw	
30	500080258	1	Ground cable	
31	500080259	1	Battery bridge wire	
33	500080261	1	Battery cable	

DynapacParts.com
800-889-0661

DynapacParts.com
800-889-0661

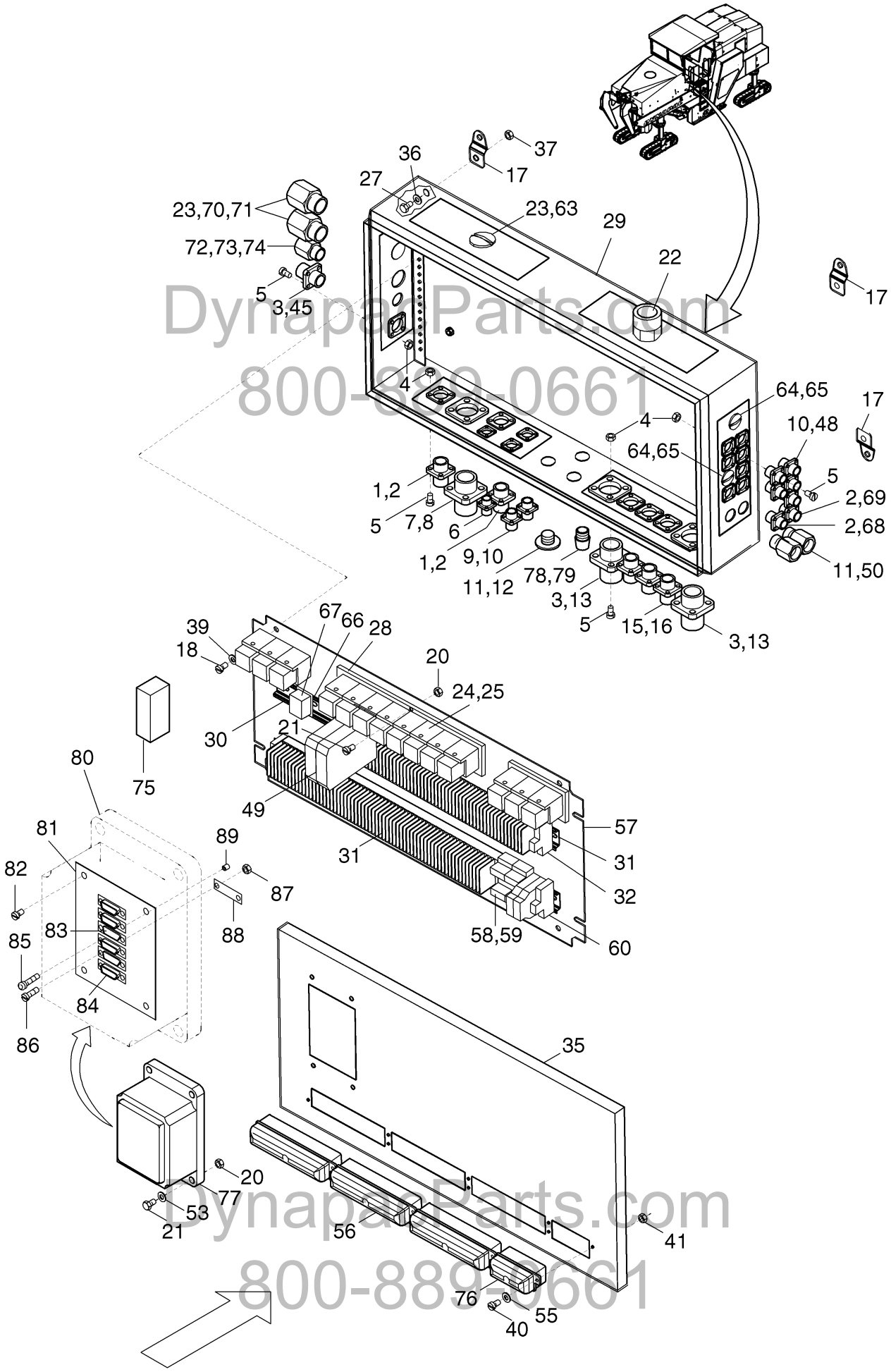

DynapacParts.com
800-889-0661

Pos. Item	Best.-Nr. Part No.	Anz. Qty.	Beschreibung Description	Bemerkung Note
1	977479708	1	CA02-COM	
2	977416564	2	Sealing	
3	977416567	4	Sealing	
4	938191010	70	Nut	
5	533002	70	Screw	
6	977479709	1	Plug	
7	977479710	1	Built-in socket	CA02-COM
8	977416570	1	Sealing	
9	977479704	2	CA02-COM	
10	977416562	7	Sealing	
11	977416516	5	Nut	
12	977416096	1	Vent cap	
13	977479712	2	CA02-COM	
15	977419713	3	CA02-COM	
16	977416565	3	Sealing	
17	977451049	4	Holder	
18	533025	11	Screw	
19	570003	11	Hex. nut	
20	570004	7	Hex. nut	
21	936730591	7	Cylinder screw	
22	977415464	2	Hose screwing	
23	977416529	4	Counter nut	
24	977730406	7	Relay	
25	977729010	7	Relay socket	
27	500018	4	Hex. screw	
28	500080206	1	Relay holder	
29	500080204	1	Clamp box, compl.	
30	977455534	2	Terminal rail	
31	977425026	110	Serial terminal	
32	977425012	4	End bracket	
35	977425025	1	Sealing cover	
36	977416603	4	Lower washer	
37	570005	4	Nut	
39	939570509	4	Disc	
40	533008	18	Screw	
41	938191012	18	Nut	
45	977479705	1	CA02-COM	
48	977479711	5	CA02-COM	
49	978016201	2	Electronic module	
50	977417116	2	Cable screwing	
53	977416601	4	Lower washer	
54	936730271	4	Cylinder screw	
55	977416602	10	Lower washer	
56	977455747	3	Fuse box	
57	500080205	1	Mounting plate	
58	49100560	2	Relay	

DynapacParts.com
800-889-0661
DynapacParts.com
800-889-0661

Clamp box, compl. **500-08150**

Pos. Item	Best.-Nr. Part No.	Anz. Qty.	Beschreibung Description	Bemerkung Note
59	49100561	2	Relay holder	
60	977425035	2	Terminal	
62	500080330	1	Gateway	
63	977416059	1	Blind plug	
64	977416041	4	Blind plug	
65	977416511	4	Counter nut	
66	977425034	1	Mounting plate	
67	978067009	1	Transformator	
68	977479743	1	CA02-COM	
69	977479742	1	CA02-COM	
70	977415429	2	SEM-quick connection	
71	977416449	2	Sealing washer	
72	977415421	1	SEM-quick connection	
73	977416441	1	Sealing washer	
74	977416511	1	Counter nut	
75	977704661	1	Flasher unit	
76	977455747	1	Fuse box	
77	500080290	1	PCD interface	
78	977477089	3	Metal hood	
79	977385109	3	Protection covering	
80	500080309	1	Mounting housing	
81	500080289	1	Interface plate	
82	936750109	4	Flat head cap screw	
83	500080291	3	PCD interface	RS232
84	500080292	1	PCD interface	CAN
85	977478240	8	Stop screw	
86	936750113	4	Screw	
87	938191010	4	Nut	
88	500080293	2	Cover plate	
89	977478243	8	Distance piece	

DynapacParts.com
800-889-0661

DynapacParts.com
800-889-0661

Clamp box, compl. **500-08150**

DynapacParts.com
800-889-0661

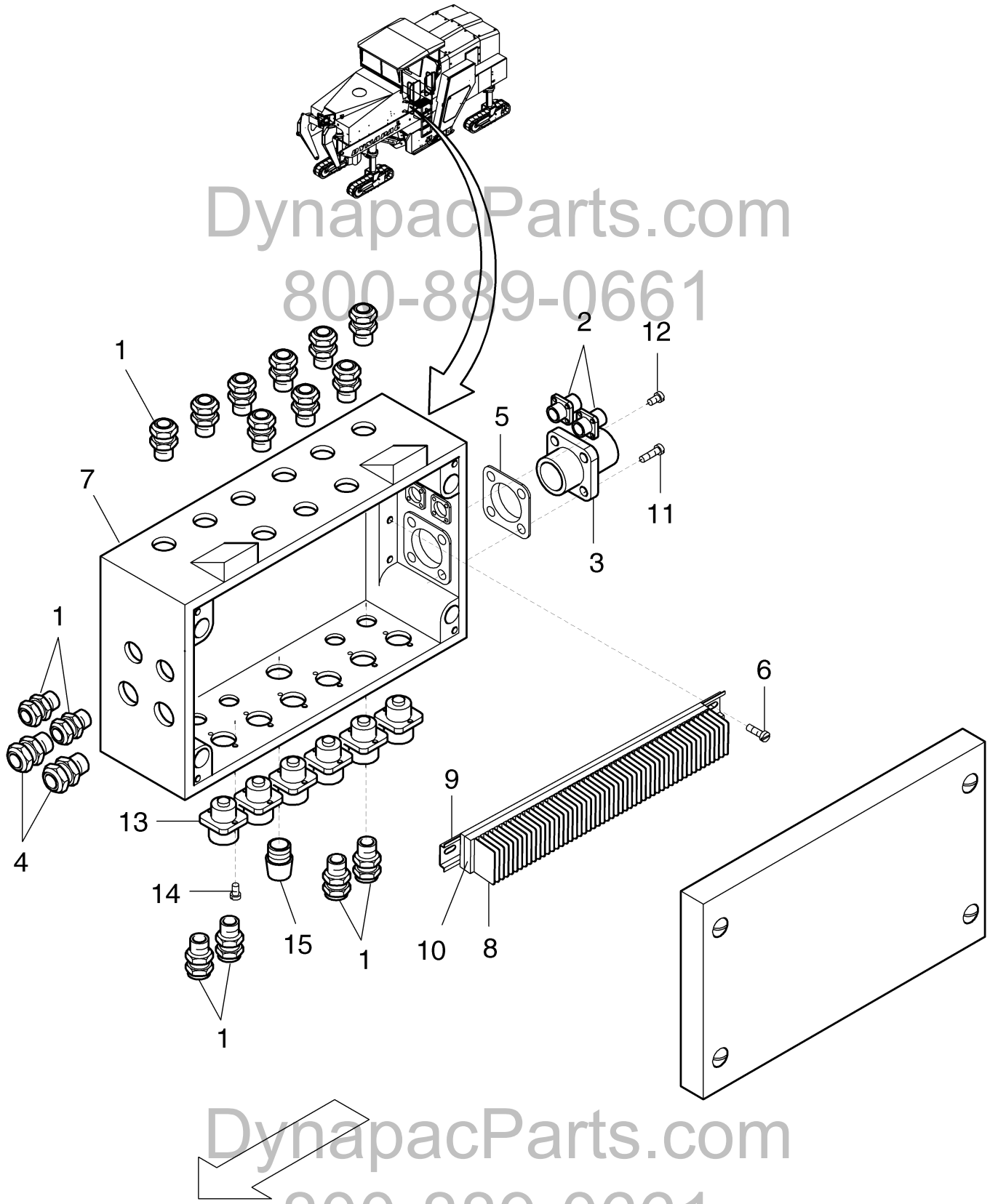

DynapacParts.com
800-889-0661

Pos. Item	Best.-Nr. Part No.	Anz. Qty.	Beschreibung Description	Bemerkung Note
1	977417109	16	Cable screwing	
2	977479709	2	Plug	
3	977479739	1	Plug	E2B-15
4	977417111	2	Cable screwing	
5	977416570	1	Sealing	
6	533038	2	Cylinder screw	
7	500080134	1	Aluminium housing	
8	977425029	33	Mini-terminal	
9	500080136	1	Terminal rail	
10	977425030	2	End bracket	
11	936730274	4	Cylinder screw	
12	936730371	8	Cylinder screw	
13	977479738	6	Plug socket	
14	533002	12	Screw	
15	977416096	1	Vent cap	

DynapacParts.com
800-889-0661

DynapacParts.com
800-889-0661

Clamp box, compl. **500-08160**

DynapacParts.com
800-889-0661

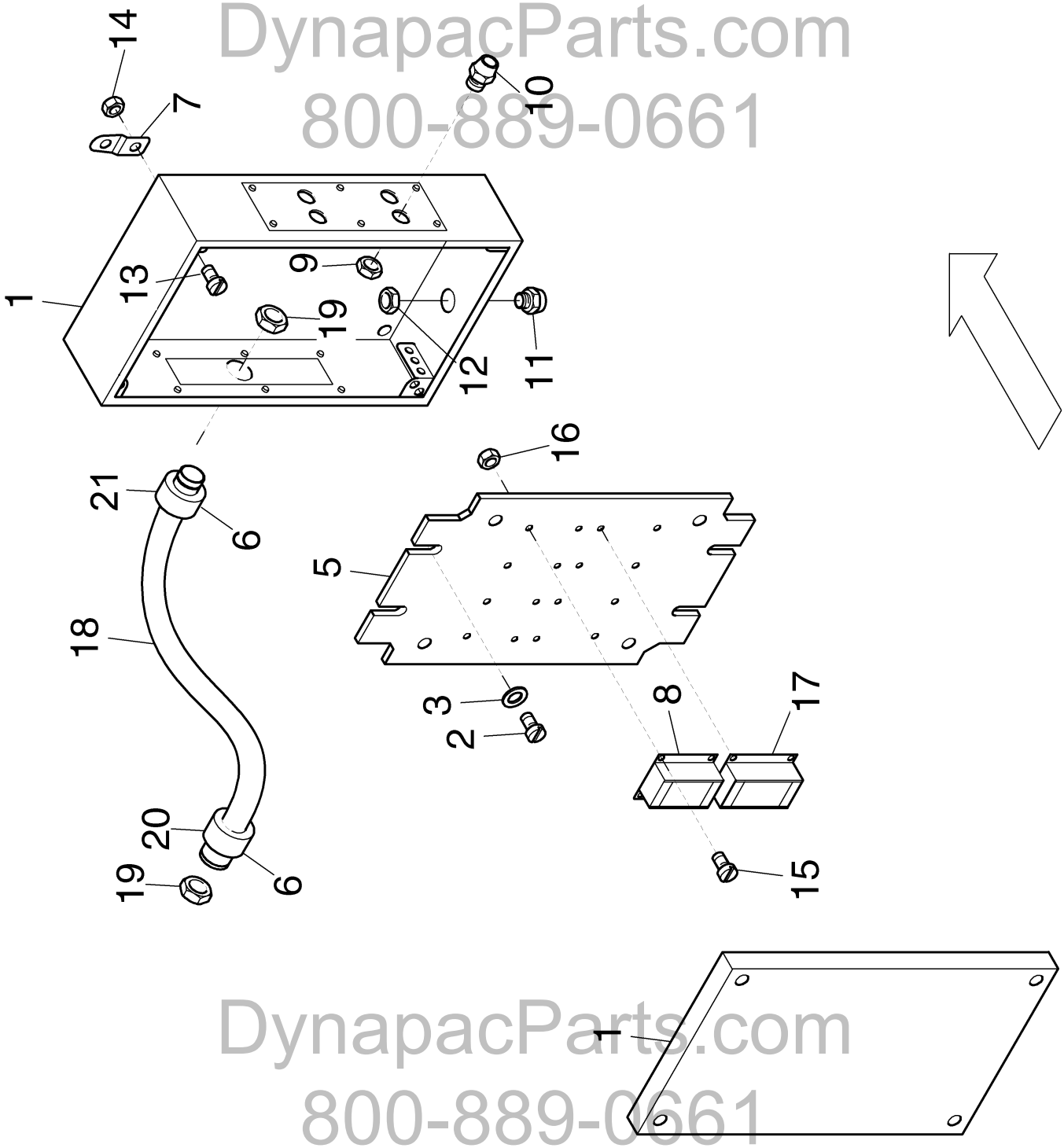

DynapacParts.com
800-889-0661

Pos. Item	Best.-Nr. Part No.	Anz. Qty.	Beschreibung Description	Bemerkung Note
			Switch box for cameras	
1	500080203	1	Switch box	
2	533025	4	Screw	
3	939570509	4	Disc	
5	500080202	1	Plate	
6	977415411	1	Plug	
7	977451049	4	Holder	
8	978065002	1	Control device	
9	977416509	4	Counter nut	
10	977417109	4	Cable screwing	
11	977416096	1	Vent cap	
12	977416516	1	Nut	
13	500018	4	Hex. screw	
14	570005	4	Nut	
15	936730377	8	Screw	
16	938191012	8	Nut	
17	978065003	1	Control device	
18	977418861	1	Cable protection hose	
19	977416511	2	Counter nut	
20	977416431	2	Sealing washer	
21	977415463	1	Plug	

DynapacParts.com
800-889-0661

DynapacParts.com
800-889-0661

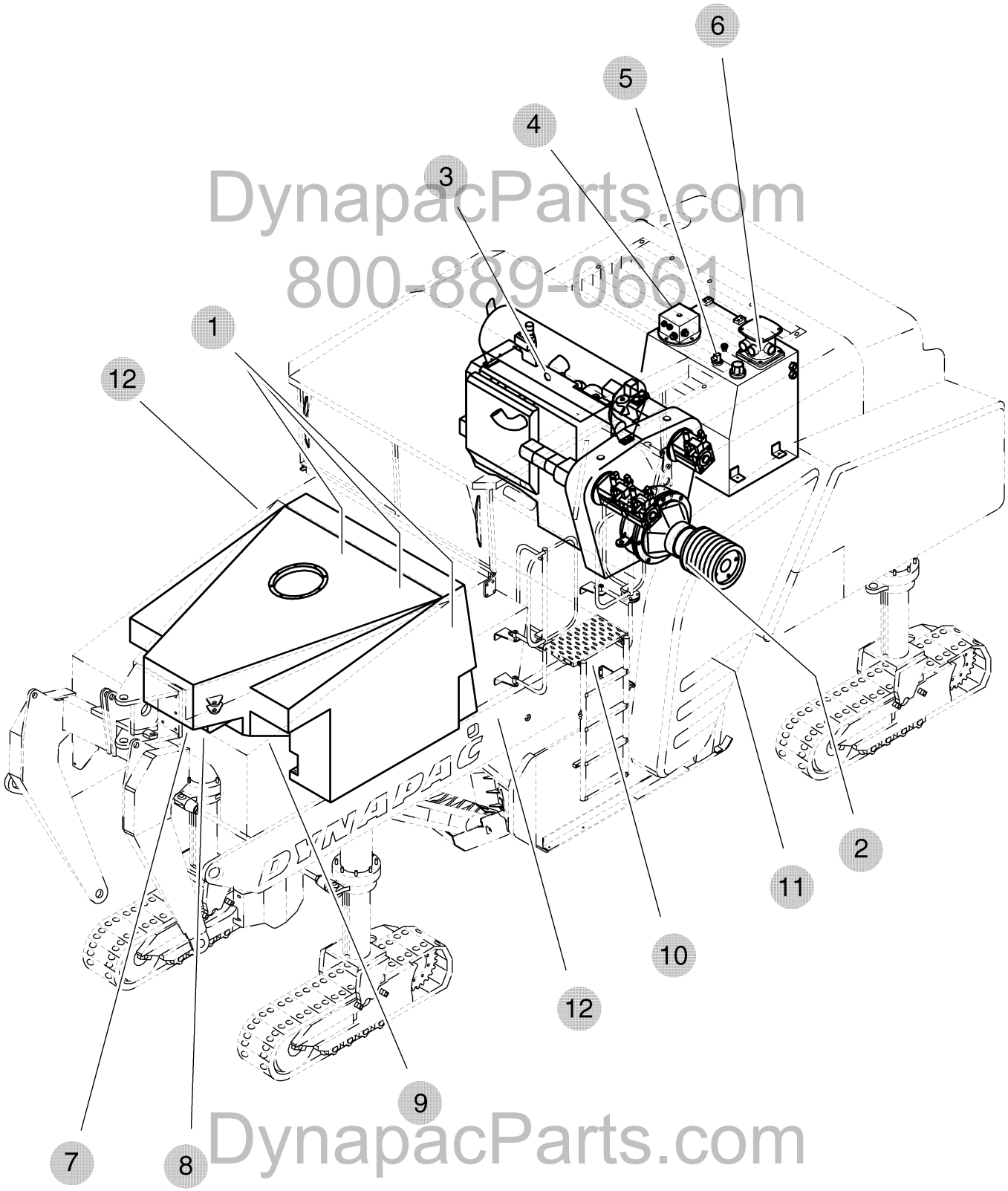

DynapacParts.com
800-889-0661

DynapacParts.com
800-889-0661

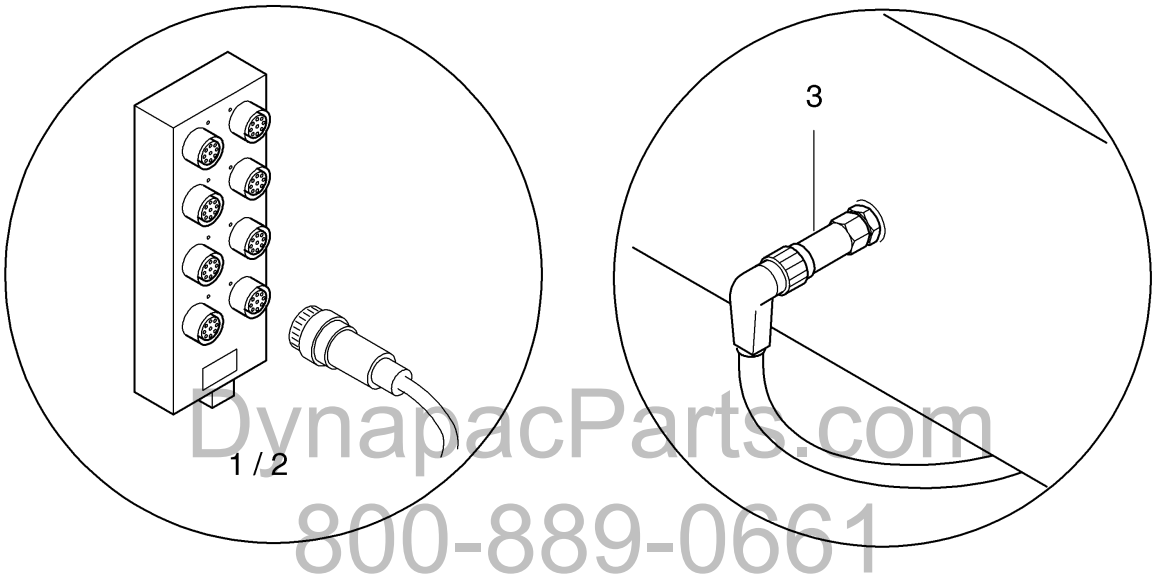

DynapacParts.com
800-889-0661

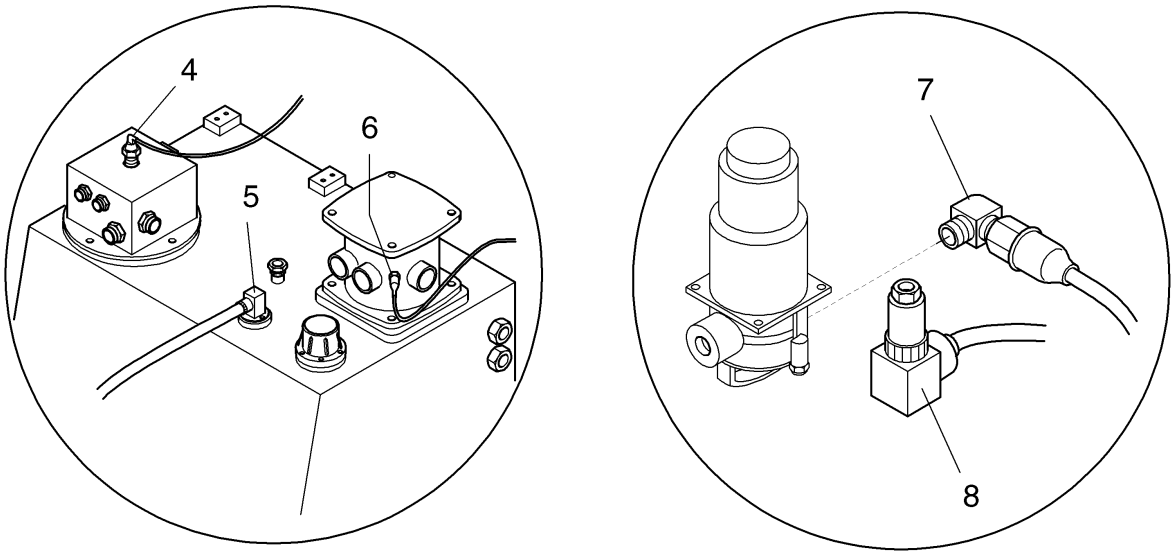

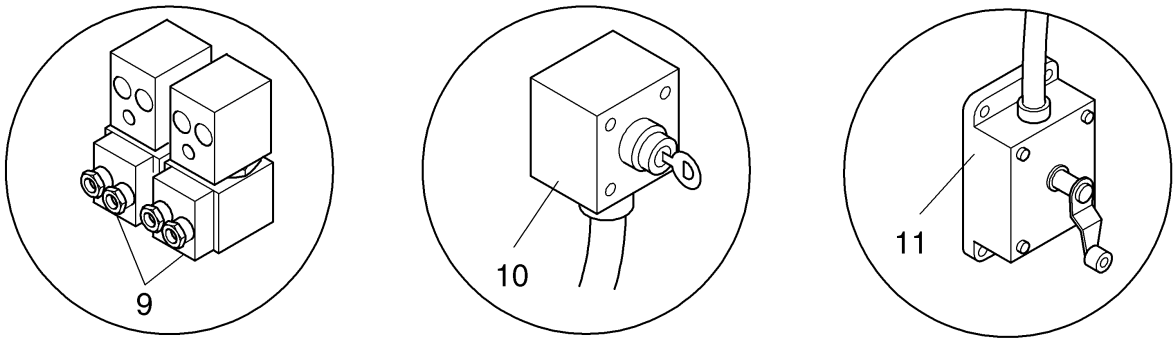

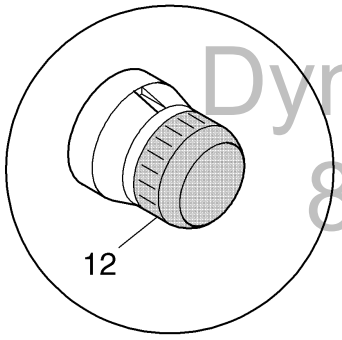

DynapacParts.com
800-889-0661

Prinzipskizze

Kabelplan 2

Cable plan 2

500080151

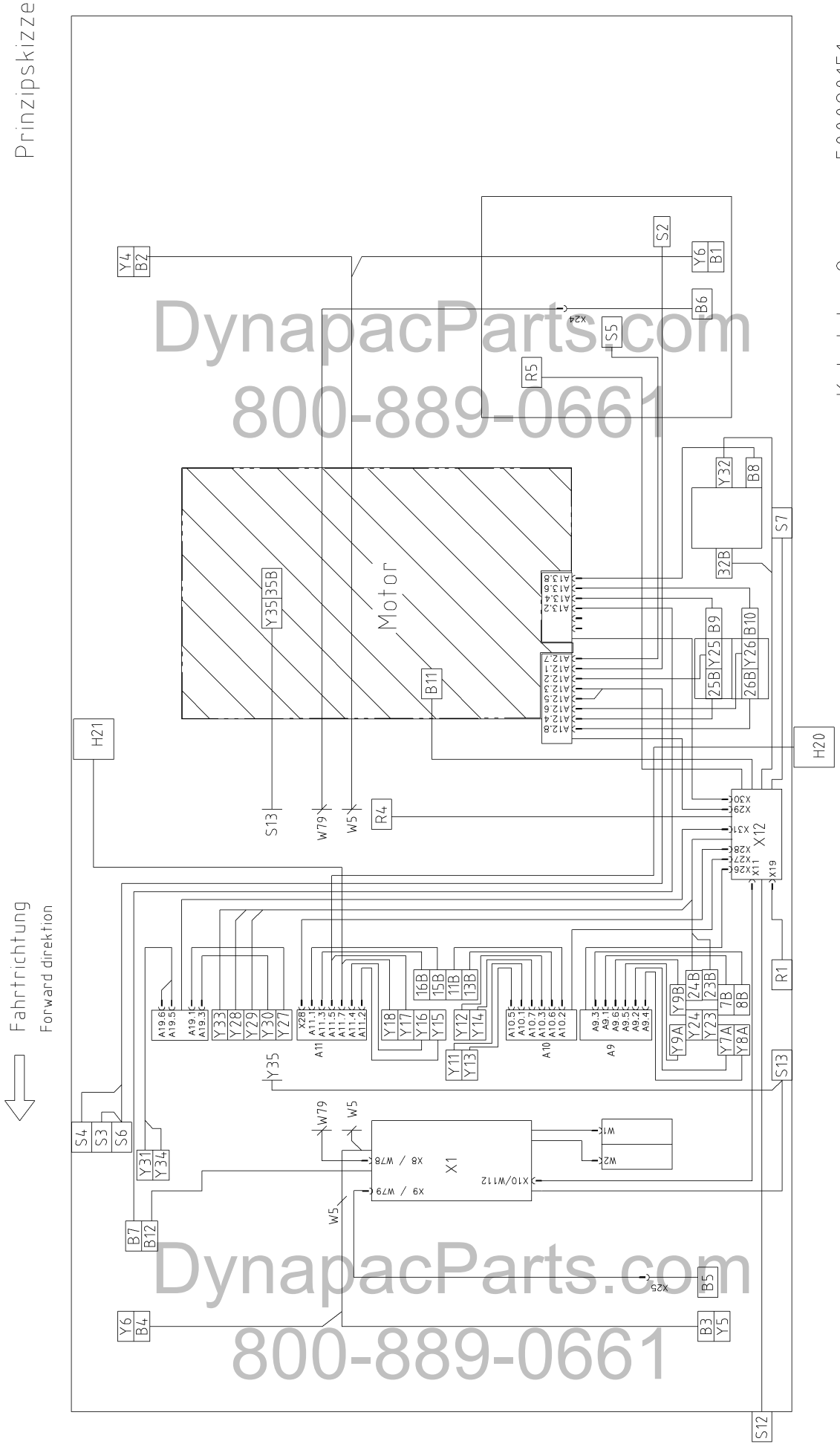

DynapacParts.com
800-889-0661

DynapacParts.com
800-889-0661

Pos. Item	Best.-Nr. Part No.	Anz. Qty.	Beschreibung Description	Bemerkung Note
	500080151		Cable plant 2	
1	978064411	4	Input/output module	
2	978064410	2	Input/output module	
3		1	Sensor	
4	977045109	1	Temperature transmitter	
5	977044003	1	Oil level indicator	
6		1	Pressure switch return line	
7	978015501	1	Pressure switch water tank	
8		1	Full indicator	
9		1	Valve	
10		1	Switch roof	
11	977522350	1	Limit switch scrapper	
12	977900231	2	Flash-light	

DynapacParts.com
800-889-0661

DynapacParts.com
800-889-0661

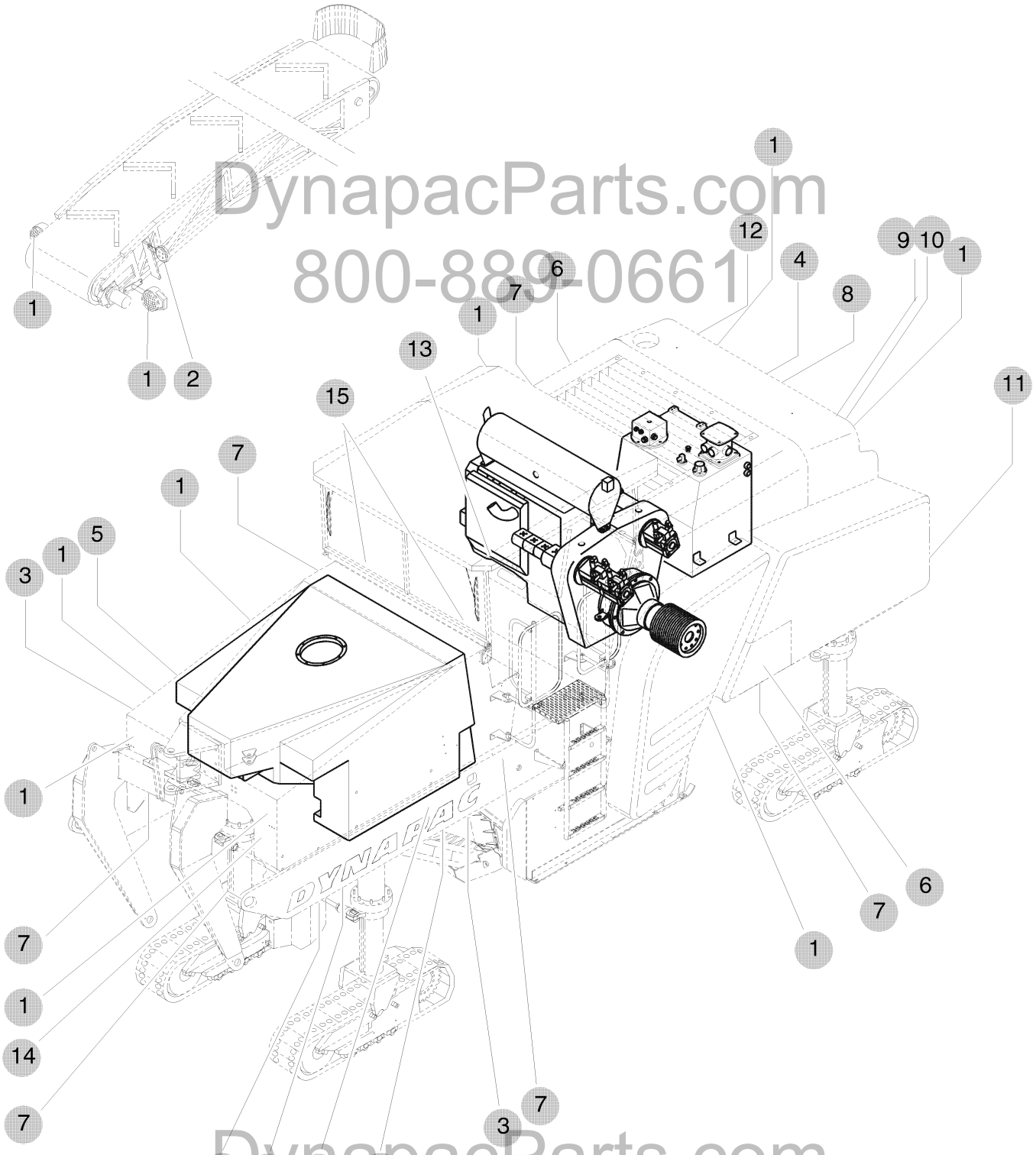

DynapacParts.com
800-889-0661
DynapacParts.com
800-889-0661

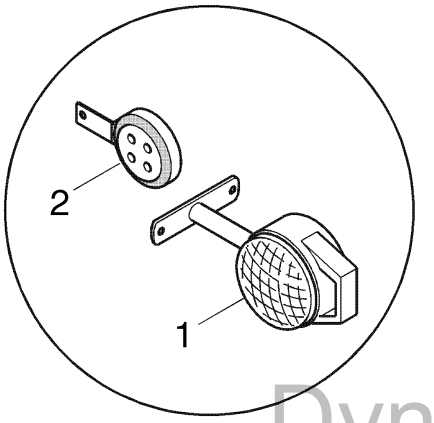

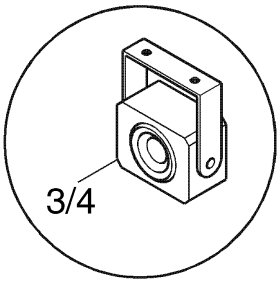

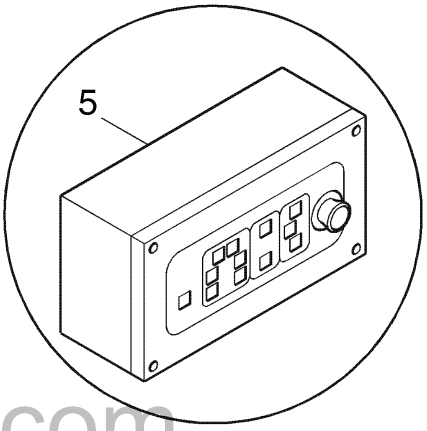

DynapacParts.com
800-889-0661

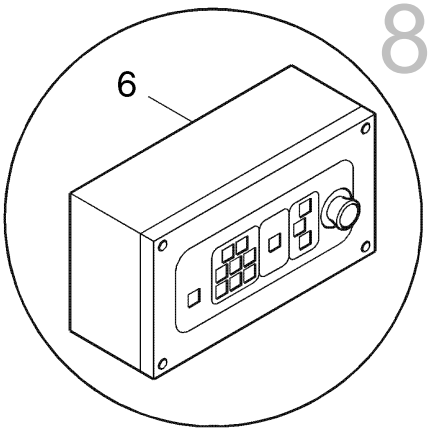

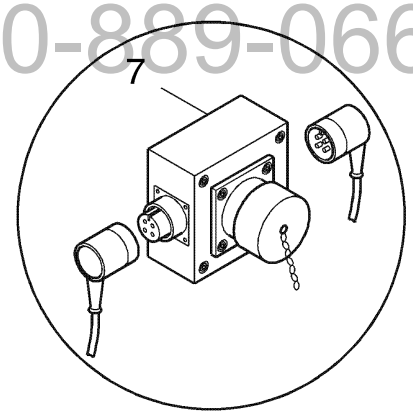

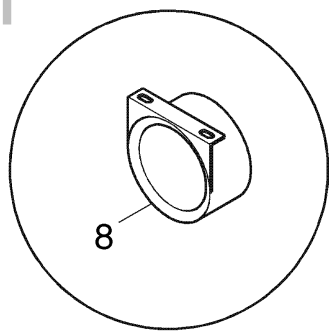

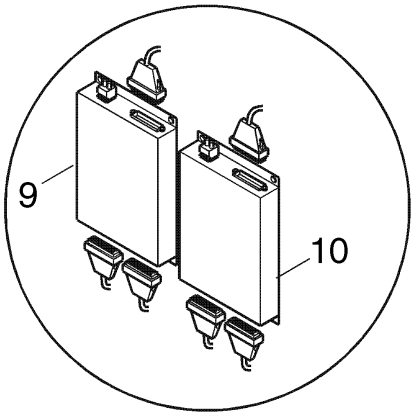

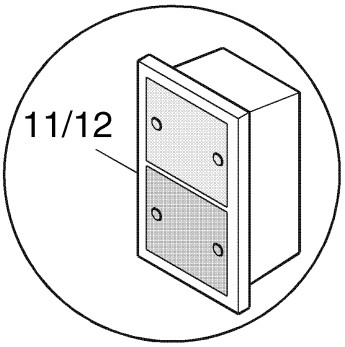

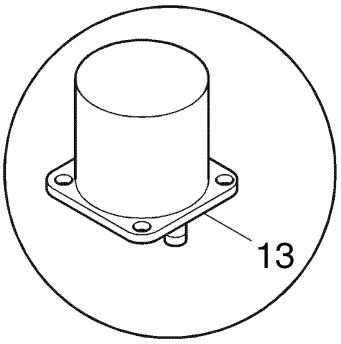

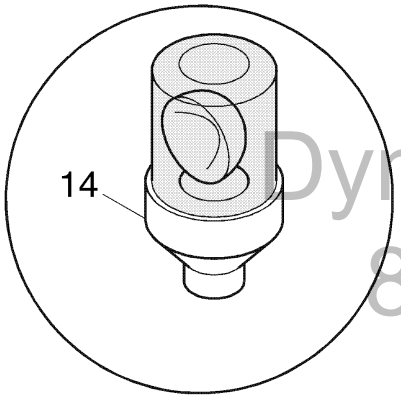

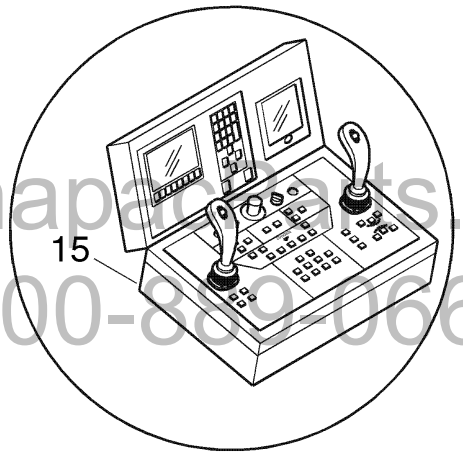

Dynapac Parts.com
800-889-0661

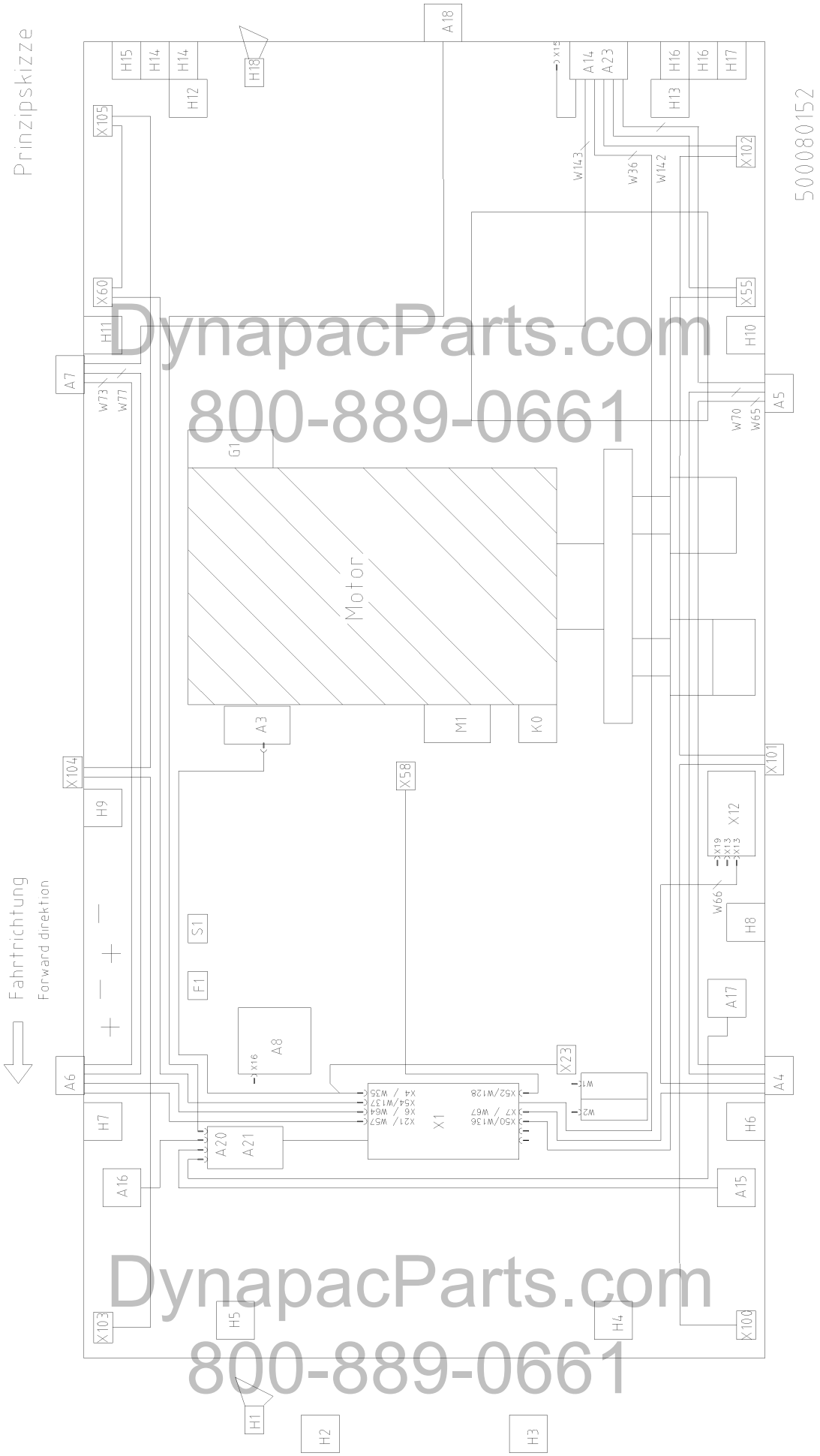

DynapacParts.com
800-889-0661
DynapacParts.com
800-889-0661

Pos. Item		Best.-Nr. Part No.	Anz. Qty.	Beschreibung Description	Bemerkung Note
		500080152		Cable plant 3	- 500.130
1		977900132	12	Working lamp	
2		977500618	1	Horn	
3		978036005	3	Camera	
	#	978036008	1	Camera, color	70°
4		978036006	1	Camera	
	#	978036007	1	Camera, color	40°
5		978005002	2	Control unit, front	
6		978005003	2	Control unit, rear	
7			6	Distributor	
8		977500701	1	Back-up alarm	
9		978024001	X	Gateway	
10		978024003	1	Gateway	
11		977877001	1	End lamp, left	
12		977988002	1	End lamp, right	
13			1	Starter relay	
14			1	Warning light	
15		500-08200		**Operator panel, right**	
		500-08210		**Operator panel, left**	

#) Alternatively delivery - substrution for

DynapacParts.com
800-889-0661

DynapacParts.com
800-889-0661

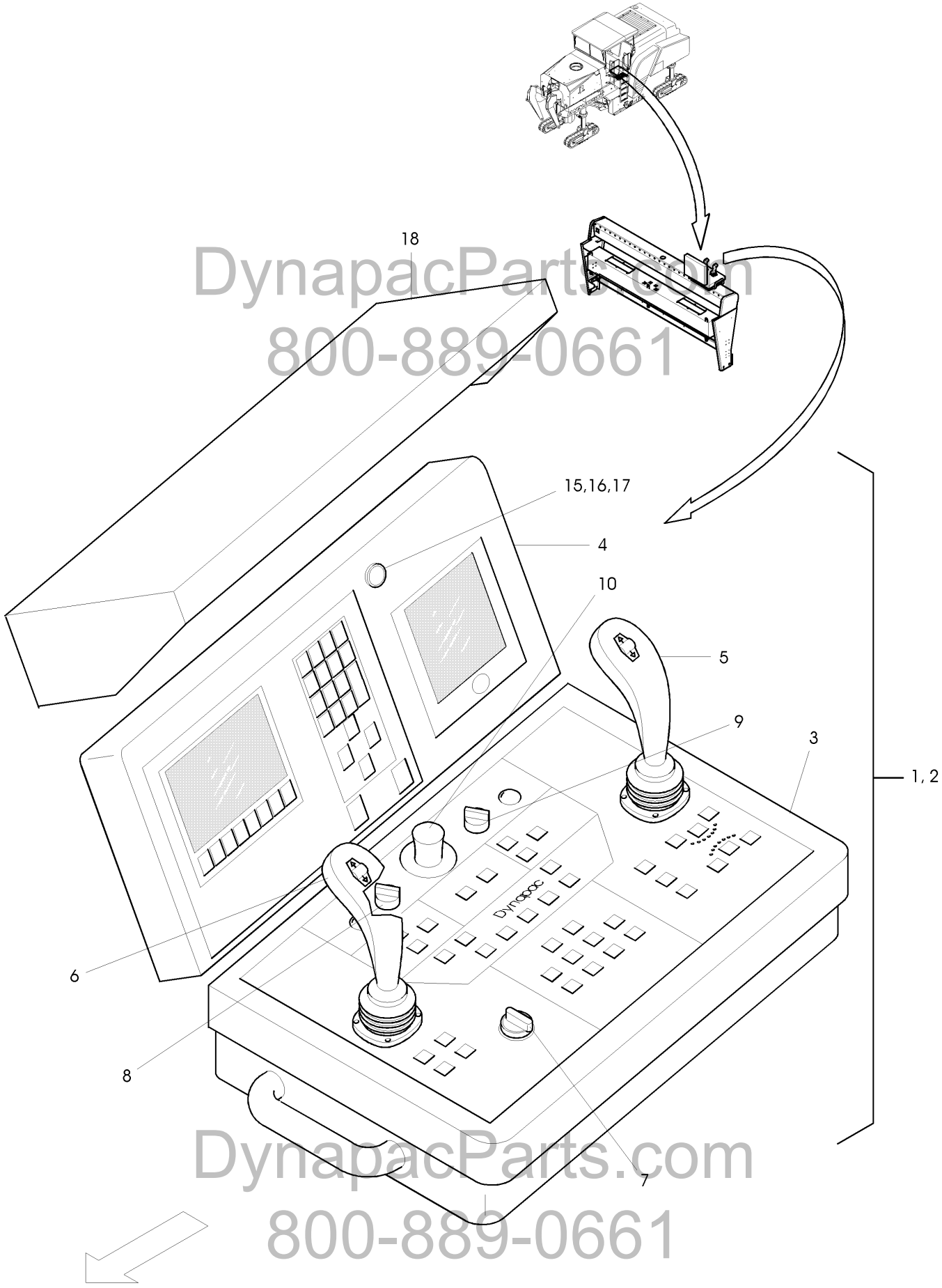

DynapacParts.com
800-889-0661
DynapacParts.com
800-889-0661

Pos. Item	Best.-Nr. Part No.	Anz. Qty.	Beschreibung Description	Bemerkung Note
			Operator panel, right	
1	978005001	1	Operator stand with TFT, compl.	
2	978005005	1	Operator stand without TFT, compl.	
3	978005020	1	Control unit cpl.	
4	978005024	1	Graphic unit	
_01	978036022	1	_Monitor	
5	977517713	1	Drive lever	Schwarz/black
6	977517714	1	Drive lever	Gelb/yellow
7	977520011	1	glow-start switch	
8	977512171	1	Rotary switch	
9	977512168	1	Rotary switch	
10	977580238	1	Emergency stop switch	
11	978005023	1	Cover	
12	49100516	1	SIgnal indicator	
15	977580270	1	Contact element	
16	977580272	1	Switch	
17	977580273	1	Cap	
18	930429090	1	Protection	
				19.01.07

DynapacParts.com
800-889-0661

DynapacParts.com
800-889-0661

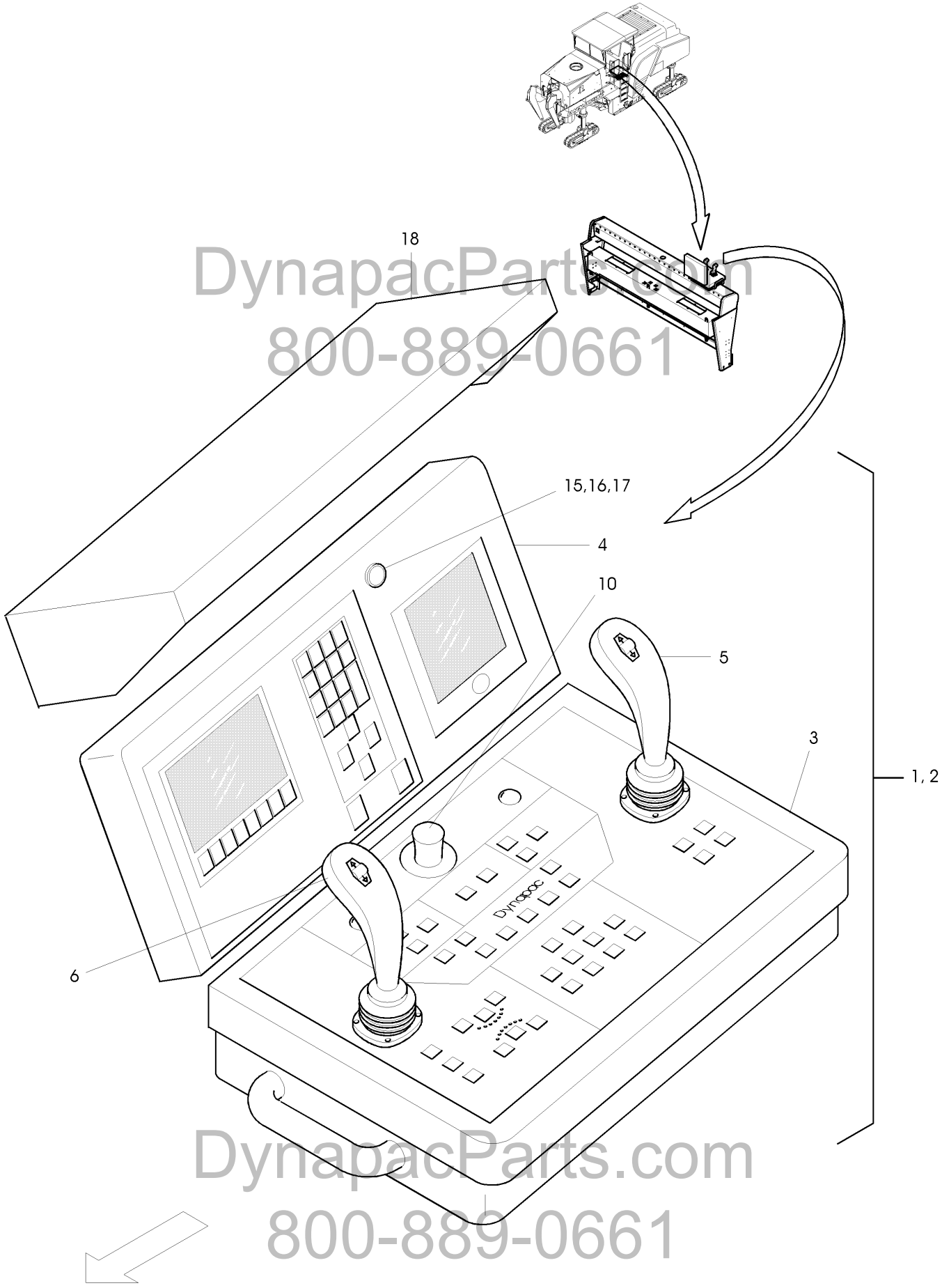

DynapacParts.com
800-889-0661

DynapacParts.com
800-889-0661

Pos. Item	Best.-Nr. Part No.	Anz. Qty.	Beschreibung Description	Bemerkung Note
			Operator panel, left	
1	978005004	1	Operator stand with TFT, compl.	
2	978005006	1	Operator stand without TFT, compl.	
3	978005021	1	Control unit cpl.	
4	978005024	1	Graphic unit	
_01	978036022	1	_Monitor	
5	977517714	1	Drive lever	Gelb/yellow
6	977517713	1	Drive lever	Schwarz/black
10	977580238	1	Emergency stop switch	
11	978005023	1	Cover	
12	49100516	1	Signal indicator	
15	977580270	1	Contact element	
16	977580272	1	Switch	
17	977580273	1	Cap	
18	930429090	1	Protection	
				19.01.07

DynapacParts.com
800-889-0661

DynapacParts.com
800-889-0661

DynapacParts.com
800-889-0661

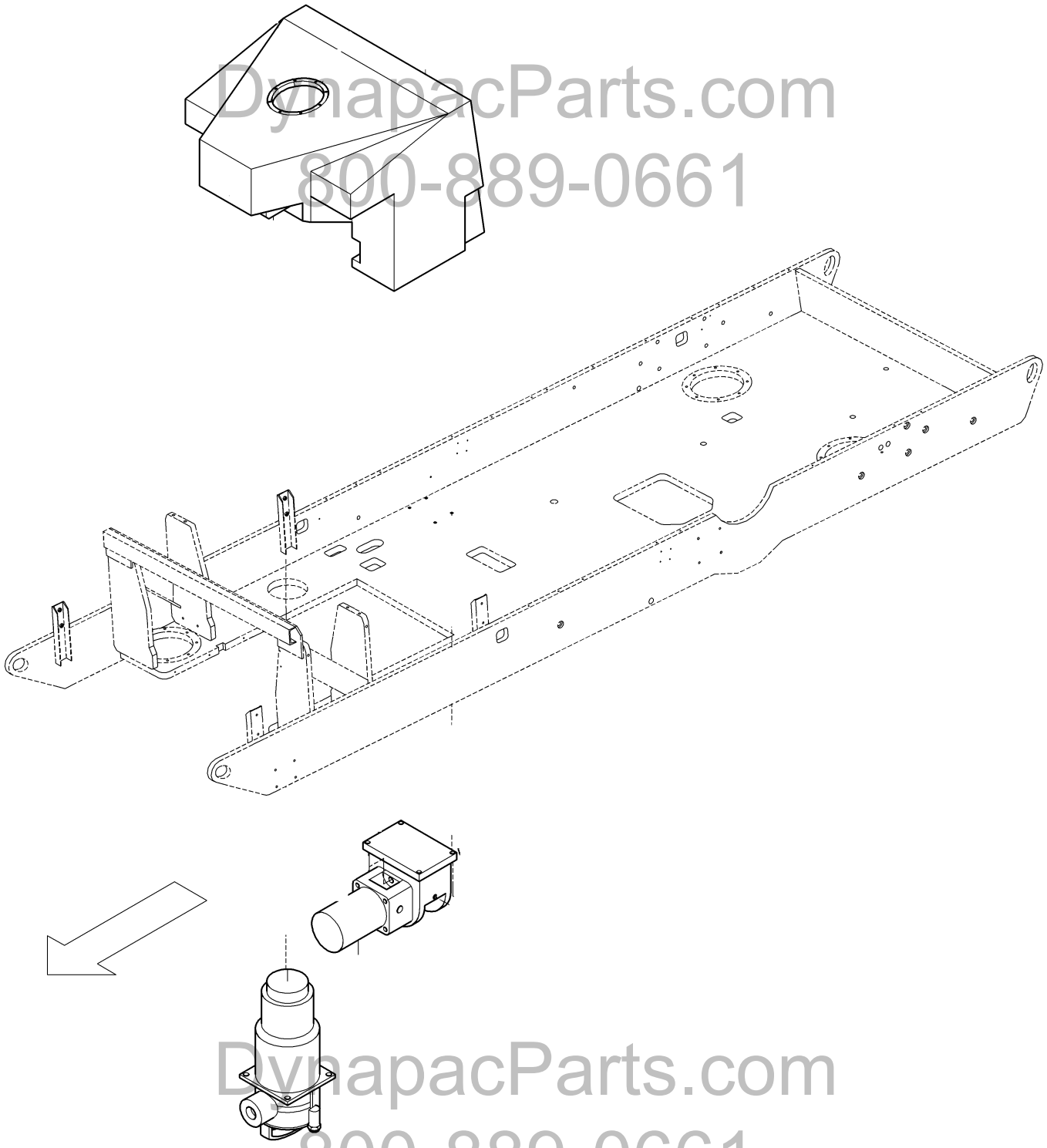

DynapacParts.com
800-889-0661

Pos. Item	Best.-Nr. Part No.	Anz. Qty.	Beschreibung Description	Bemerkung Note
	500-09110	1	**Cooling system**	

DynapacParts.com
800-889-0661

DynapacParts.com
800-889-0661

Water system

DynapacParts.com
800-889-0661

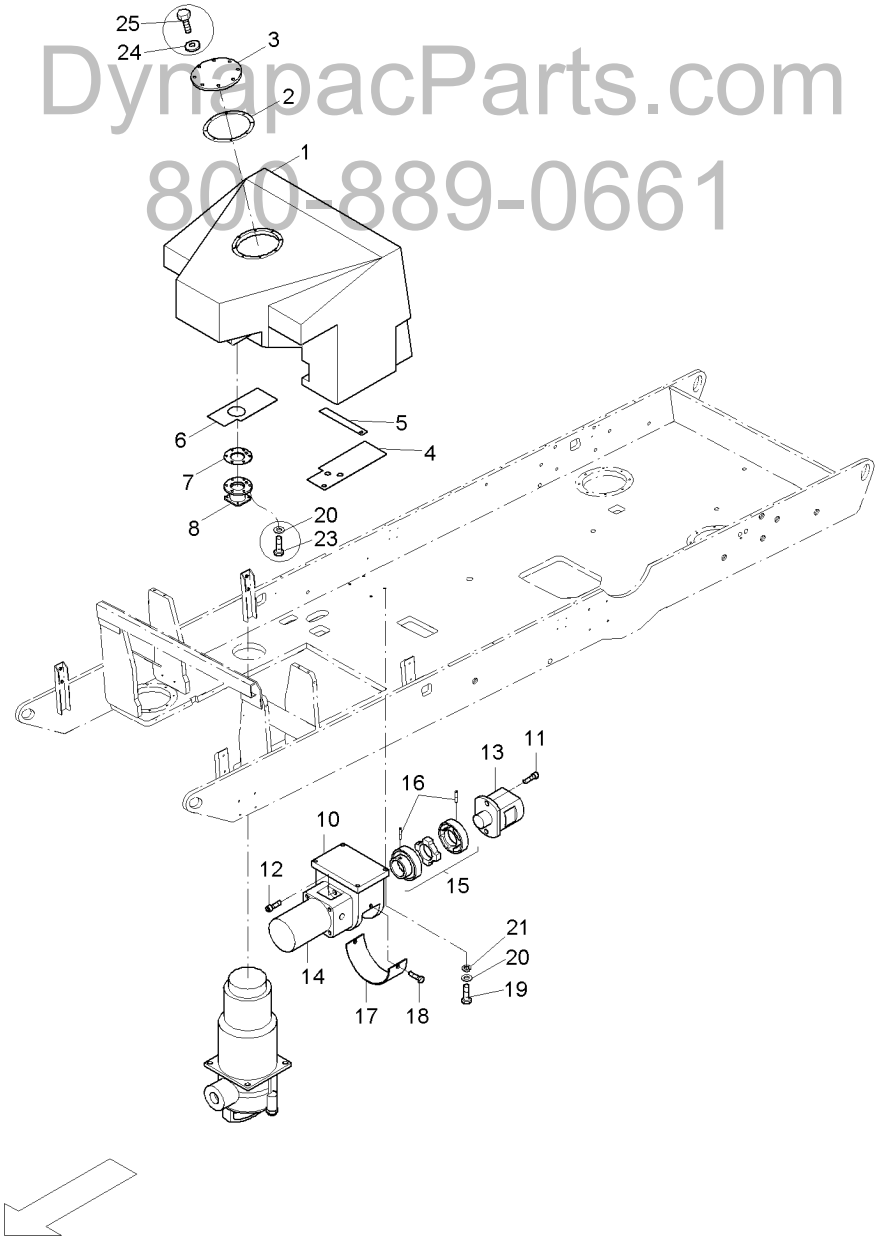

DynapacParts.com
800-889-0661

Pos. Item	Best.-Nr. Part No.	Anz. Qty.	Beschreibung Description	Bemerkung Note
1	500190103	1	Water tank	
2	930176940	1	Sealing	
3	930540651	1	Cover	
4	500090103	1	Rubber bearing, left	
5	500090111	1	Rubber bearing, middle	
6	500090112	1	Rubber bearing, right	
7	500090208	1	Sealing for flange	
8	500090207	1	Flange	
10	500090129	1	Housing	
11	508029	2	Screw	
12	508019	2	Screw	
13	966384153	1	Gear wheel-motor	
14	967386601	1	Water pump	
15	933504046	1	Clutch	Bowex
+	933558260	1	Ring gear	
16	49901275	2	Threaded pin	
17	500090132	1	Cover	
18	500018	2	Hex. screw	
19	500029	4	Hex. screw	
20	600008	10	Disc	
21	704130	4	Spring washer	
23	500234	6	Screw	
24	600006	8	Disc	
25	500053	8	Screw	
30			–	13.09.2006
	500090128	1	Working pump, compl.	

+) Available as single part / Not shown with own item no.

DynapacParts.com
800-889-0661

DynapacParts.com
800-889-0661

Pos. Item	Best.-Nr. Part No.	Anz. Qty.	Beschreibung Description	Bemerkung Note
	500-10110	1	**Accessories box, rear shank bite box**	
	500-10120	1	**Quick disconnect holder**	Bingham
	500-10121	1	**Quick disconnect holder**	Kennametall
	500-10501	1	**Round shank bit**	

DynapacParts.com
800-889-0661

DynapacParts.com
800-889-0661

Accessories

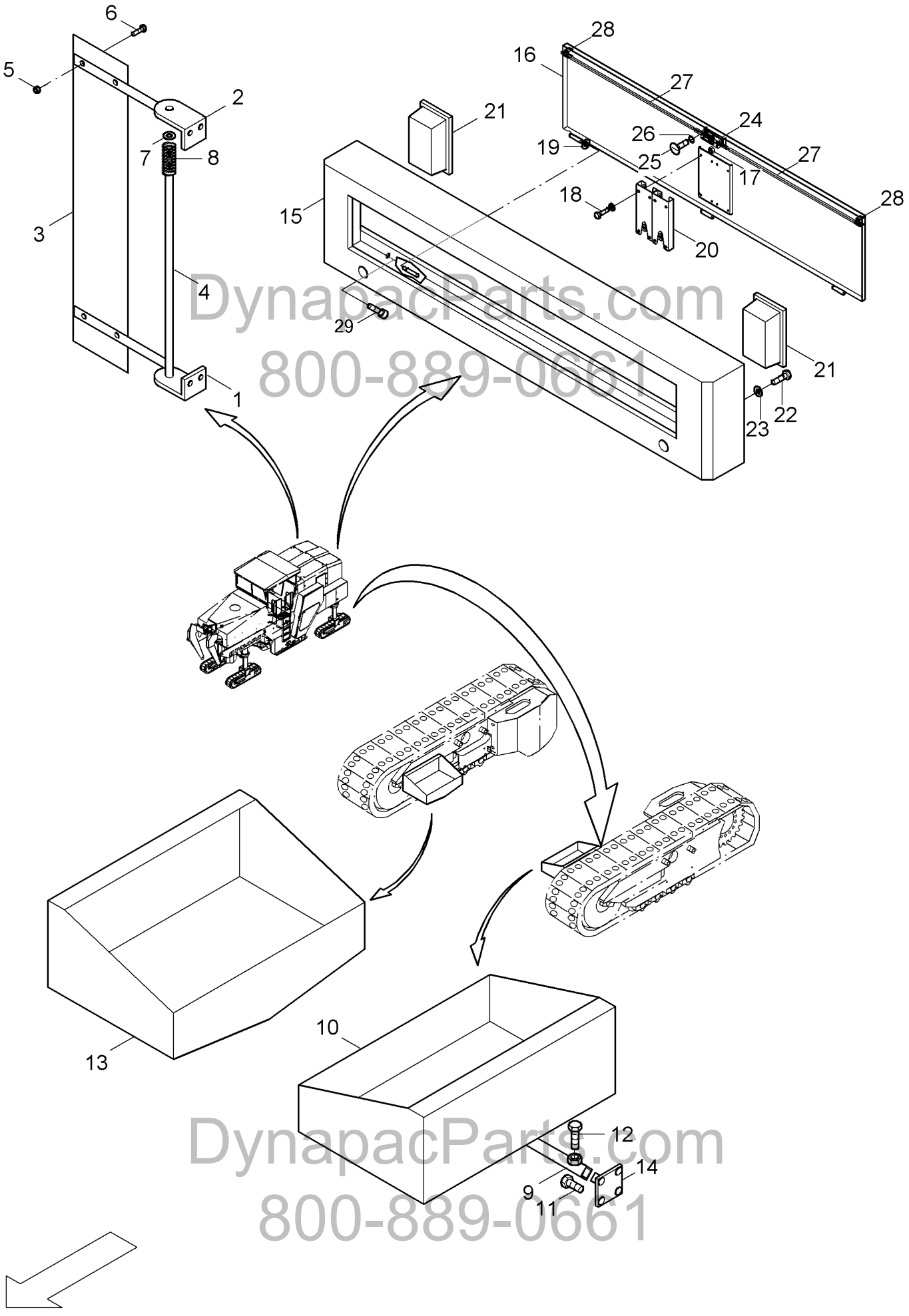

DynapacParts.com
800-889-0661
DynapacParts.com
800-889-0661

Pos. Item	Best.-Nr. Part No.	Anz. Qty.	Beschreibung Description	Bemerkung Note
	500100187		Warning shield, compl.	
1	500100175	1	Support angle, lower	
2	500100176	1	Support angle, top	
3	500100183	1	Warning plate	
	956050002	1	Foil	
4	500100179	1	Holder	
5	570004	4	Hex. nut	
6	500013	4	Screw	
7	600017	1	Disc	
8	930176971	1	Pressure spring	
9	500050809	4	Holder	
10	500050810	2	Shank bit box	
11	500035	8	Hex. screw	
12	500193	4	Screw	
13	500050818	2	Shank bit box	
14	500050812	4	Flange	
	500100700		Accessories box, rear, compl.	
15	500100701	1	Tool box	
16	500100706	1	Flap	
17	570004	1	Hex. nut	
18	508001	9	Cylinder screw	
19	930120530	3	Hinge	
20	500100715	2	Steering holder	
21	977881300	2	End- brake- and flasher light	
22	500053	4	Screw	
23	600003	4	Disc	
24	930436370	1	Gib and cotter	
25	938165494	8	Hex. screw	
26	600003	8	Disc	
27	500100712	2	Rod	
28	930450771	2	Holder	
29	508005	1	Screw	

DynapacParts.com
800-889-0661

DynapacParts.com
800-889-0661

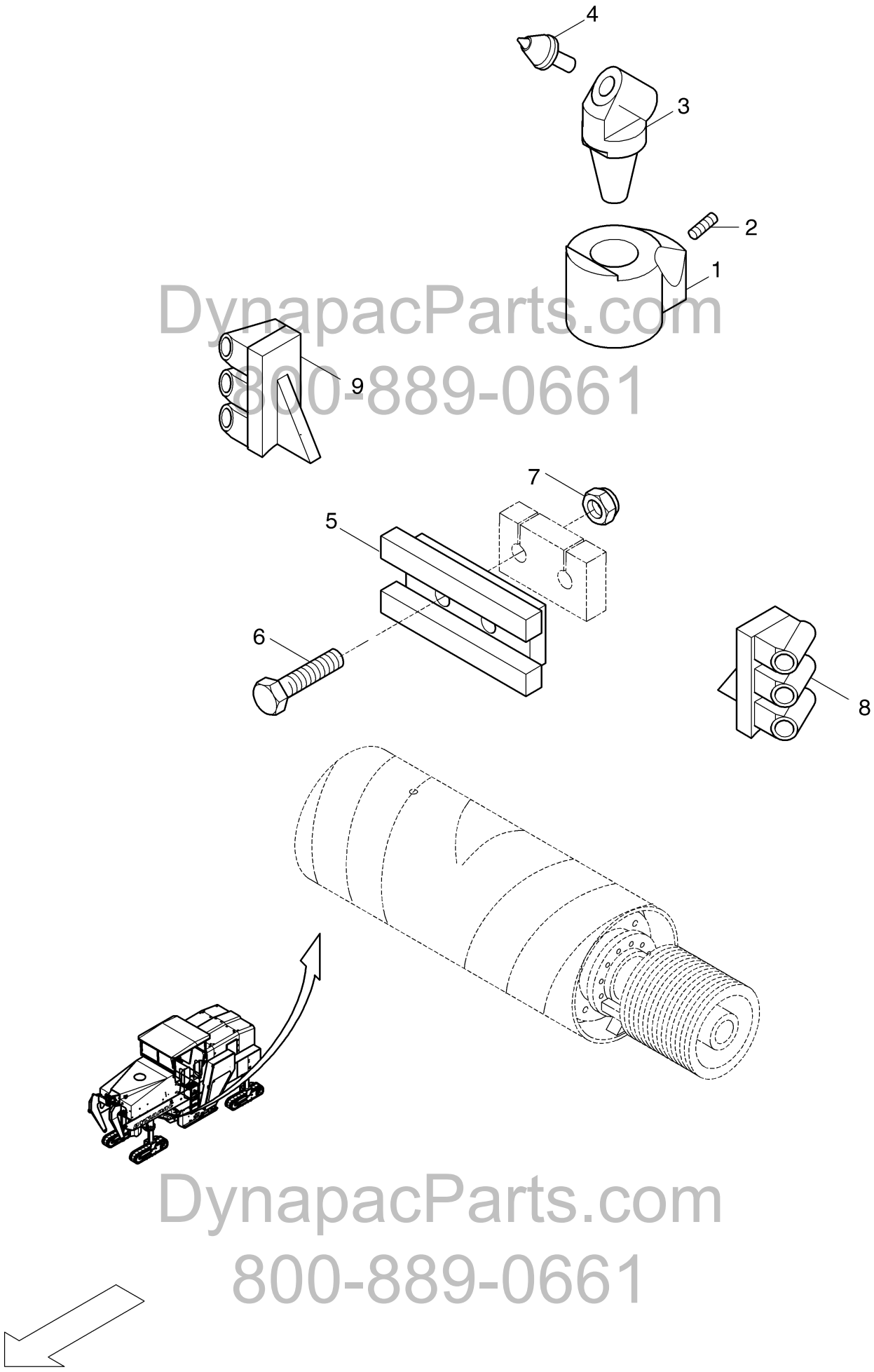

DynapacParts.com
800-889-0661

DynapacParts.com
800-889-0661

Pos. Item	Best.-Nr. Part No.	Anz. Qty.	Beschreibung Description	Bemerkung Note
	930460244		Cutting drum	2100 mm
1	930452601	X	Lower basic block	
2	930429006	X	Screw	
3	930320131	X	Upper part	
4	500-10501	X	**Round shank bit**	
5	930118526	X	Ejector plate	
6	49988797	X	Hex. screw	
7	570015	X	Hex. nut	
8	930425837	X	Edge scrapper, left hand	
9	930425833	X	Edge scrapper, right hand	

DynapacParts.com
800-889-0661

DynapacParts.com
800-889-0661

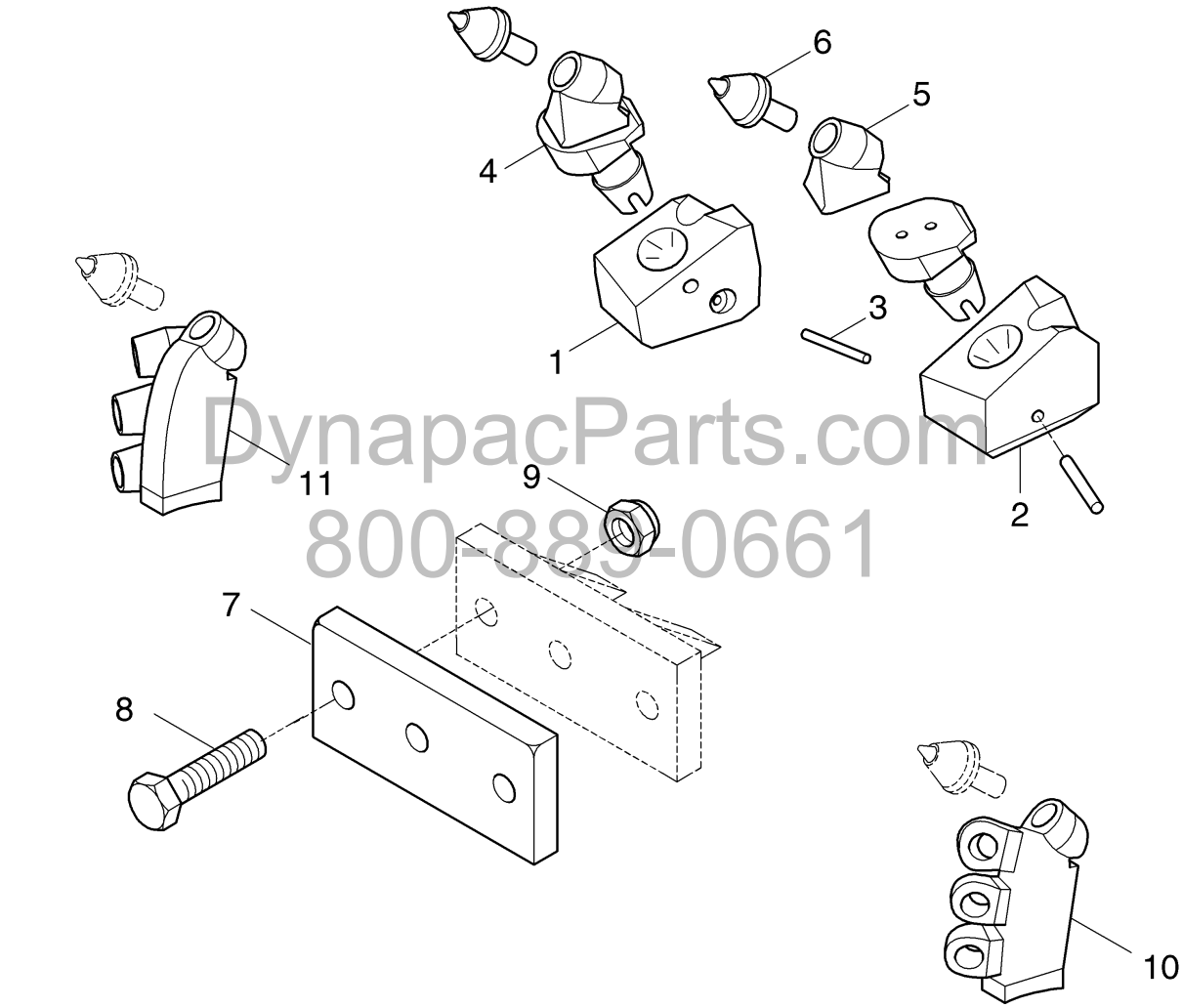

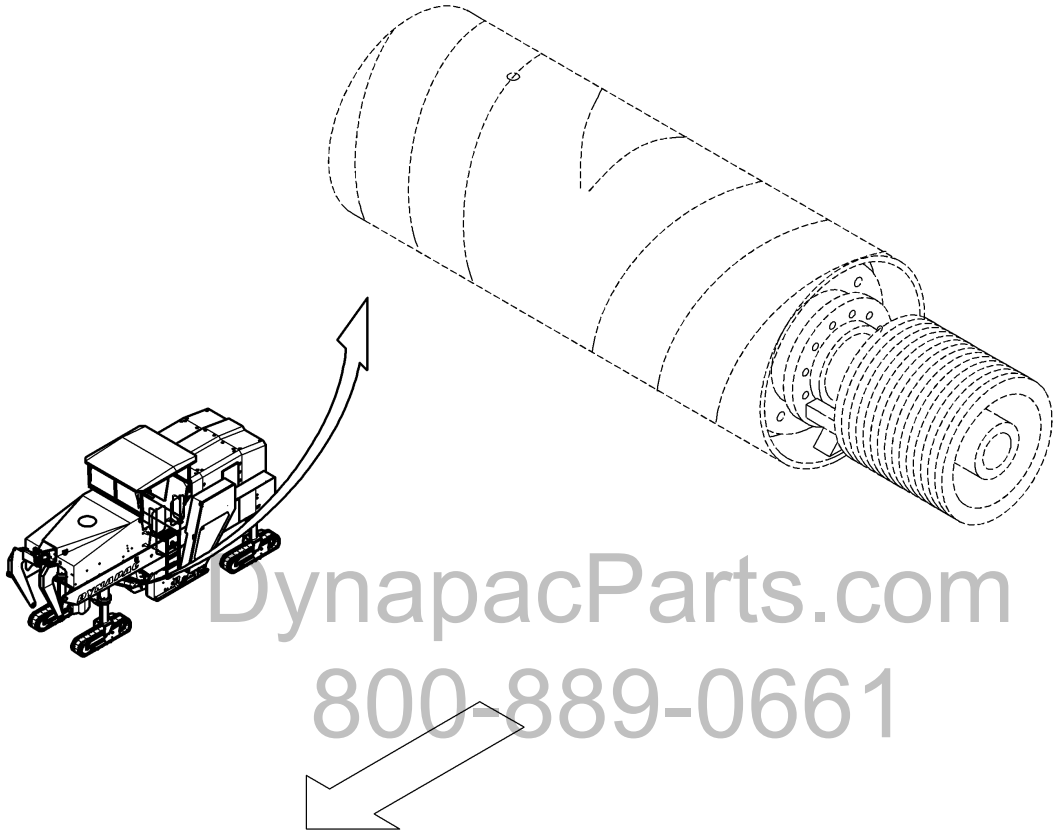

DynapacParts.com
800-889-0661

Pos. Item	Best.-Nr. Part No.	Anz. Qty.	Beschreibung Description	Bemerkung Note
	930460243		Cutting drum	2000 mm Kennametal
1	930540806	X	Lower part, right	
2	930540807	X	Lower part, left	
3	930429007	X	Drivelock pin	
4	930540809	X	Upper part	
5	930240602	X	Block	
6	500-10501	X	**Round shank bit**	
7	930118525	X	Ejector plate	
8	49900797	X	Hex. screw	
9	570015	X	Hex. nut	
10	930425834	X	Edge scrapper, left hand	
11	930425832	X	Edge scrapper, right hand	

DynapacParts.com
800-889-0661

DynapacParts.com
800-889-0661

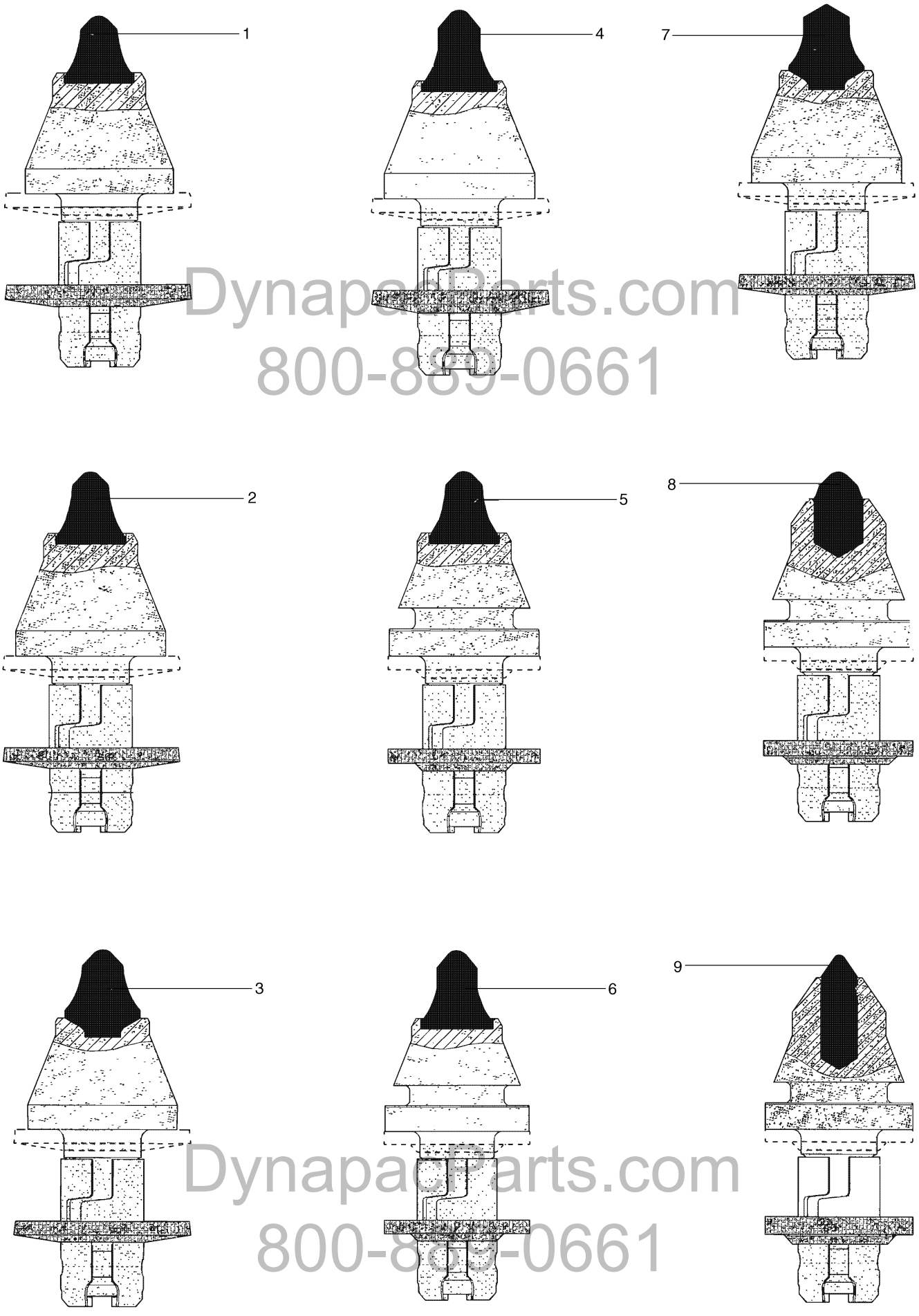

DynapacParts.com
800-869-0661

Pos. Item	Best.-Nr. Part No.	Anz. Qty.	Beschreibung Description	Bemerkung Note
1	930418524	X	Round shank bit	DP01
2	930418504	X	Round shank bit	DP04
3	930418503	X	Round shank bit	DP06
4	930418506	X	Round shank bit	RP07
5	930418507	X	Round shank bit	RP07
_01	956901050	1	_Anti-seize	
6	930418525	X	Round shank bit	DP16
7	930418513	X	Round shank bit	DP19
8	930418510	X	Round shank bit	RP21
_01	956901050	1	_Anti-seize	
9	930418511	X	Round shank bit	DP22
_01	956901050	1	_Anti-seize	

DynapacParts.com
800-889-0661

DynapacParts.com
800-889-0661

Pos. Item	Best.-Nr. Part No.	Anz. Qty.	Beschreibung Description	Bemerkung Note
	500-20110	1	**Canopy**	
	500-20120	1	**GfK roof**	
	500-20150	1	**High pressure cleaner**	
	500-20160	1	**Water fill hose**	
	500-20161	1	**Fill pump**	
	500-20200	1	**Compressed-air plant**	
7	500-20210	1	**Shank bit extensioner**	
8	500-20250	1	**Pressure air hose**	

DynapacParts.com
800-889-0661

DynapacParts.com
800-889-0661

Option

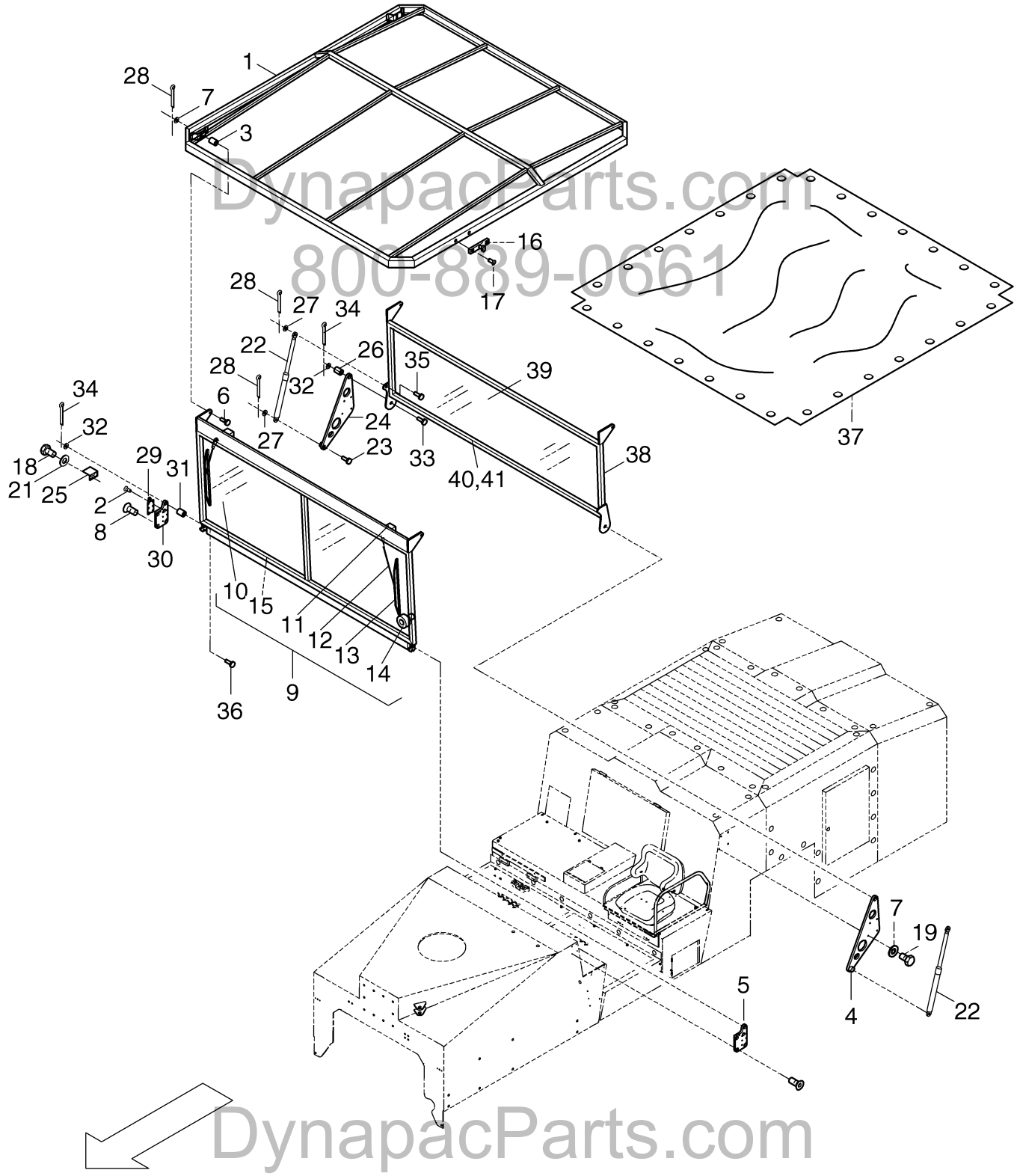

DynapacParts.com
800-889-0661

DynapacParts.com
800-889-0661

Pos. Item	Best.-Nr. Part No.	Anz. Qty.	Beschreibung Description	Bemerkung Note
			Roof	
1	500200105	1	Roof console	
2	938366595	12	Screw	
3	930136728	4	Bushing	
4	500200118	1	Stop, back left	
5	500200111	1	Stop, front left	
6	500200110	4	Bolt	
7	600008	8	Disc	
8	939475275	1	Screw	
9	500200104	1	Pane, compl.	
10 *	500200107	1	Disc	
11 *	49100692	2	Wiper motor	
12 *	49100028	2	Wiper arm	
13 *	49302624	2	Set wiper blade	
14	903645580	2	Buffer	
15	930280161	1	Seal profile	X m
16	49302609	28	Twist lock	
17	930129508	56	Rivet	
18	500018	4	Hex. screw	
19	500048	8	Screw	
21	600006	4	Disc	
22	965080265	2	Hydraulic cylinder	
_01	932278303	1	_Sealing kit	
23	500200140	2	Bolt	
24	500200135	1	Stop, back right	
25	500200143	2	Stop angle	
26	930229362	2	Friction bearing with collar	
27	600011	4	Disc	
28	936790490	8	Split pin	
29	960406051	2	Locking bar	
30	500200138	1	Stop, front right	
31	930136733	2	Bushing	
32	600014	4	Disc	
33	500200114	2	Bolt	
34	936790545	4	Split pin	
35	500200141	2	Bolt	
36	500200142	2	Bolt	
37	500100300	1	Canopy	
38	500200153	1	Roof support, rear compl.	
39	500200148	1	Rear pan	
40	49300105	1	Clamping profile	
41	49300106	1	Seal profile	

*) Available as single part

DynapacParts.com
800-889-0661
DynapacParts.com
800-889-0661

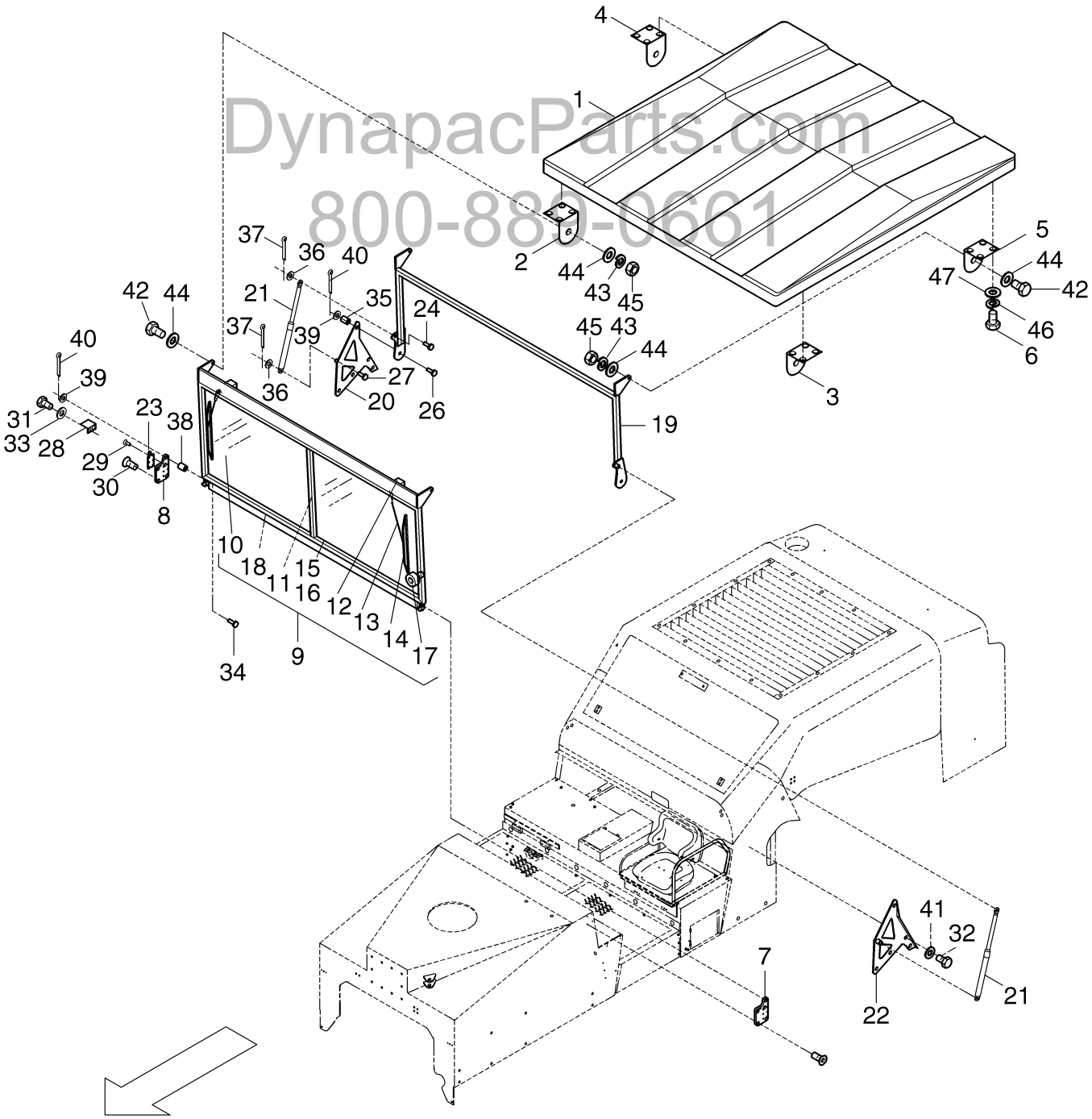

DynapacParts.com
800-889-0661

DynapacParts.com
800-889-0661

Pos. Item	Best.-Nr. Part No.	Anz. Qty.	Beschreibung Description	Bemerkung Note
	663009		GfK roof	
1	500300002	1	Roof	
2	500300111	1	Angle, front right	
3	500300113	1	Angle, front left	
4	500300114	1	Angle, rear right	
5	500300116	1	Angle, rear left	
6	500019	16	Screw	
7	500200111	1	Stop, front left	
8	500200138	1	Stop, front right	
9	500300200	1	Pane, compl.	
10	500200107	2	Disc	
11	500300201	1	Front frame	
12	49100692	2	Wiper motor	
13	49100028	2	Wiper arm	
14	49302624	1	Set wiper blade	
15	39300072	2	Rubber clamp profile	3500 mm
16	39300071	2	Fill profile	
17	903645580	2	Buffer	
18	930280161	1	Seal profile	X m
19	500300153	1	Roof support, rear	
20	500300006	1	Stop, back right	
21	965080265	2	Hydraulic cylinder	
_01	932278303	1	_Sealing kit	
22	500300004	1	Stop, back left	
23	960406051	2	Locking bar	
24	500300123	2	Bolt	
25	500300124	2	Bolt	
26	500300125	2	Bolt	
27	500300126	2	Bolt	
28	500200143	2	Stop angle	
29	938366595	12	Screw	
30	939475275	1	Screw	
31	500018	4	Hex. screw	
32	500048	8	Screw	
33	600006	4	Disc	
34	500200142	2	Bolt	
35	930229362	2	Friction bearing with collar	
36	600011	4	Disc	
37	936790490	8	Split pin	
38	930136733	2	Bushing	
39	600014	4	Disc	
40	936790545	4	Split pin	
41	600008	8	Disc	
42	500234	4	Screw	
43	704130	4	Spring washer	
44	600008	8	Disc	

DynapacParts.com
800-889-0661
DynapacParts.com
800-889-0661

Pos. Item	Best.-Nr. Part No.	Anz. Qty.	Beschreibung Description	Bemerkung Note
45	938500008	4	Nut	
46	49900161	16	Screw retention	
47	600006	16	Disc	

DynapacParts.com
800-889-0661

DynapacParts.com
800-889-0661

DynapacParts.com
800-889-0661

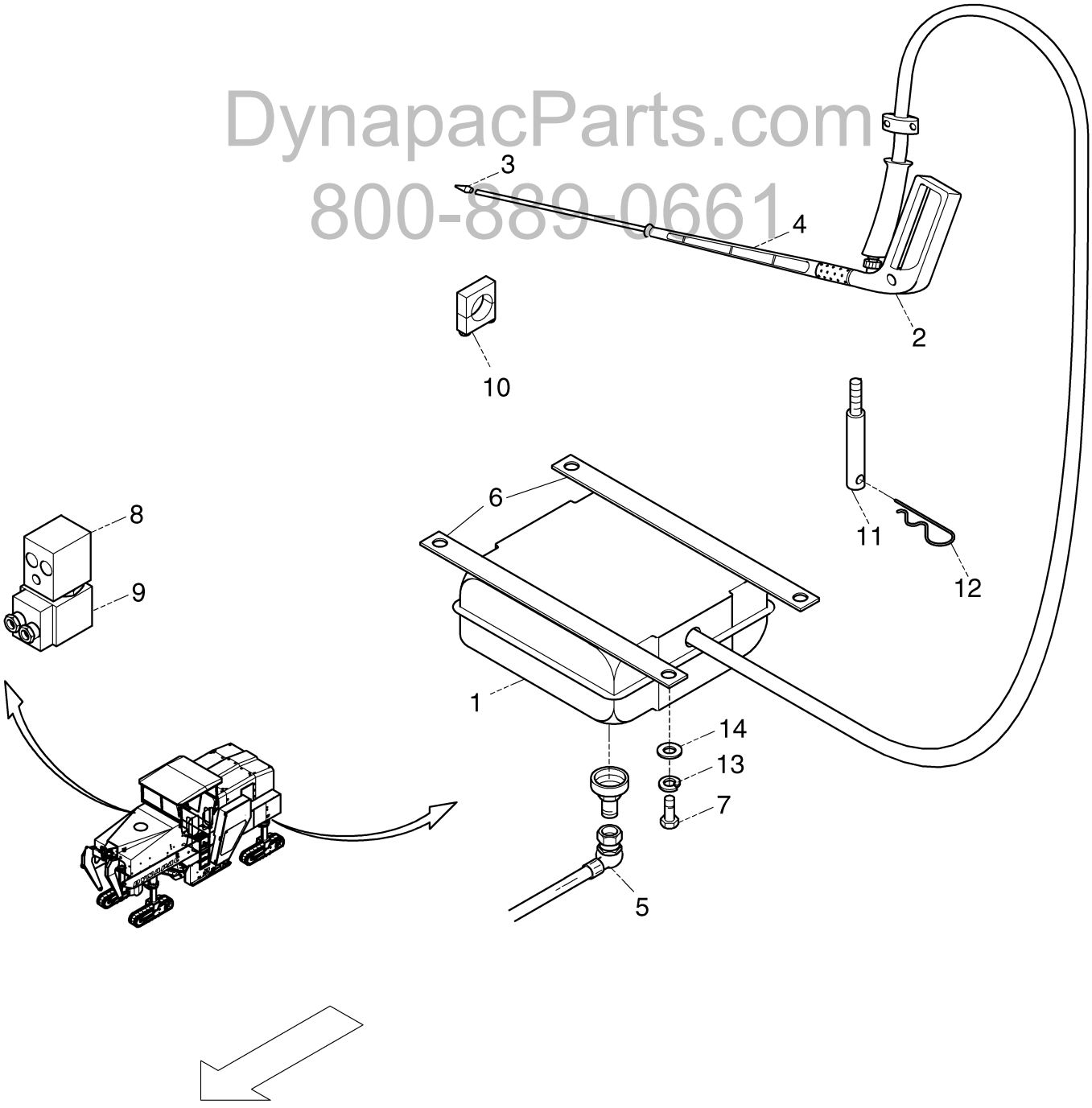

DynapacParts.com
800-889-0661

Pos. Item	Best.-Nr. Part No.	Anz. Qty.	Beschreibung Description	Bemerkung Note
	663007		High pressure cleaner	
1	930450516	1	Hose box	
2	930436356	1	Spray gun	
3	930177510	1	Nozzle end	
4	930520311	1	Extension	
5	930176816	1	Rotation joint	
6	500100259	2	Holder	
7	500053	4	Screw	
8	963404280	1	2/2 way valve	
9	963612203	1	Magnet	
10	934361025	1	Clip	
11		1	Bolt	
12	930205010	1	Spring pin	
13	49900161	4	Screw retention	
14	600006	4	Disc	

DynapacParts.com
800-889-0661

DynapacParts.com
800-889-0661

DynapacParts.com
800-889-0661

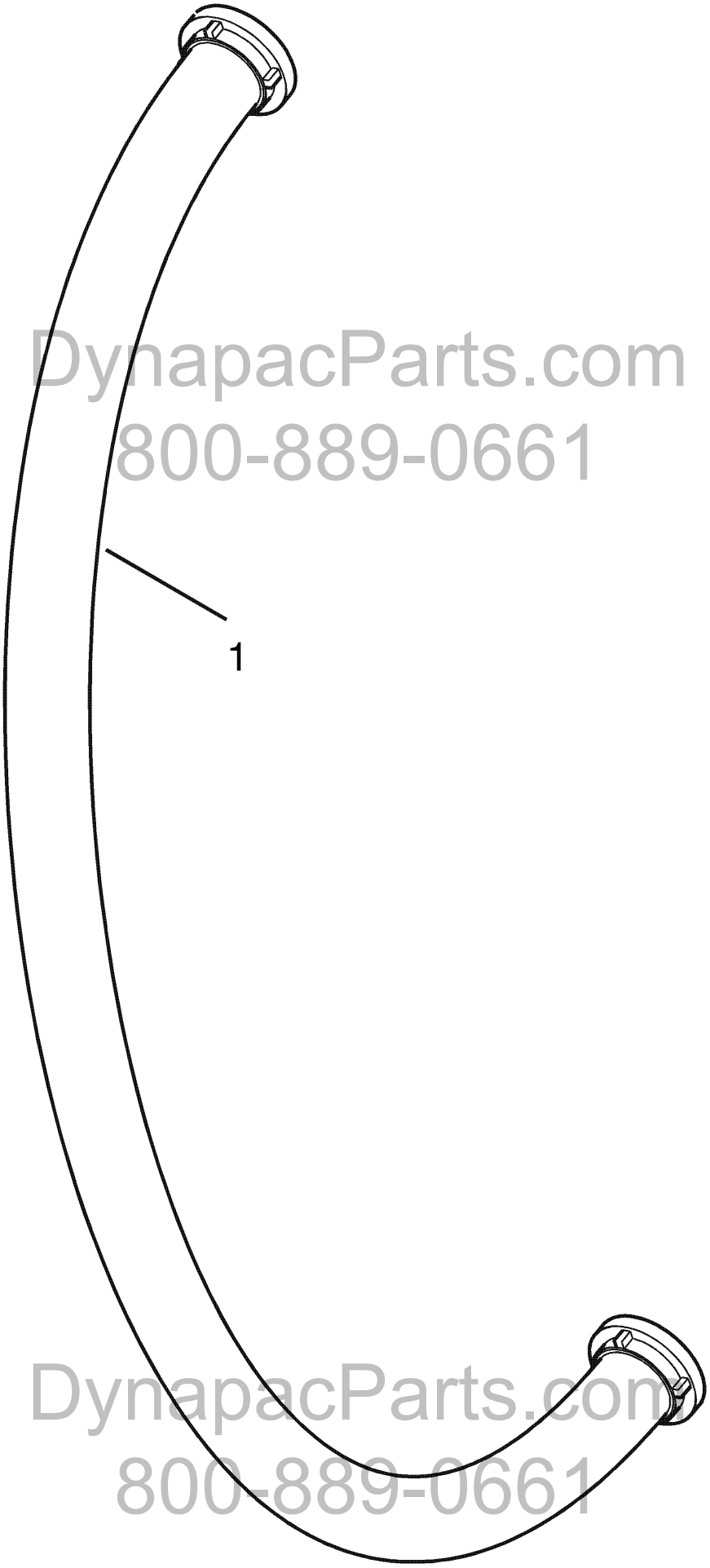

DynapacParts.com
800-889-0661

Pos. Item	Best.-Nr. Part No.	Anz. Qty.	Beschreibung Description	Bemerkung Note
1	930623530	1	Water fill hose	20m

DynapacParts.com
800-889-0661

DynapacParts.com
800-889-0661

Water fill hose **500-20160**

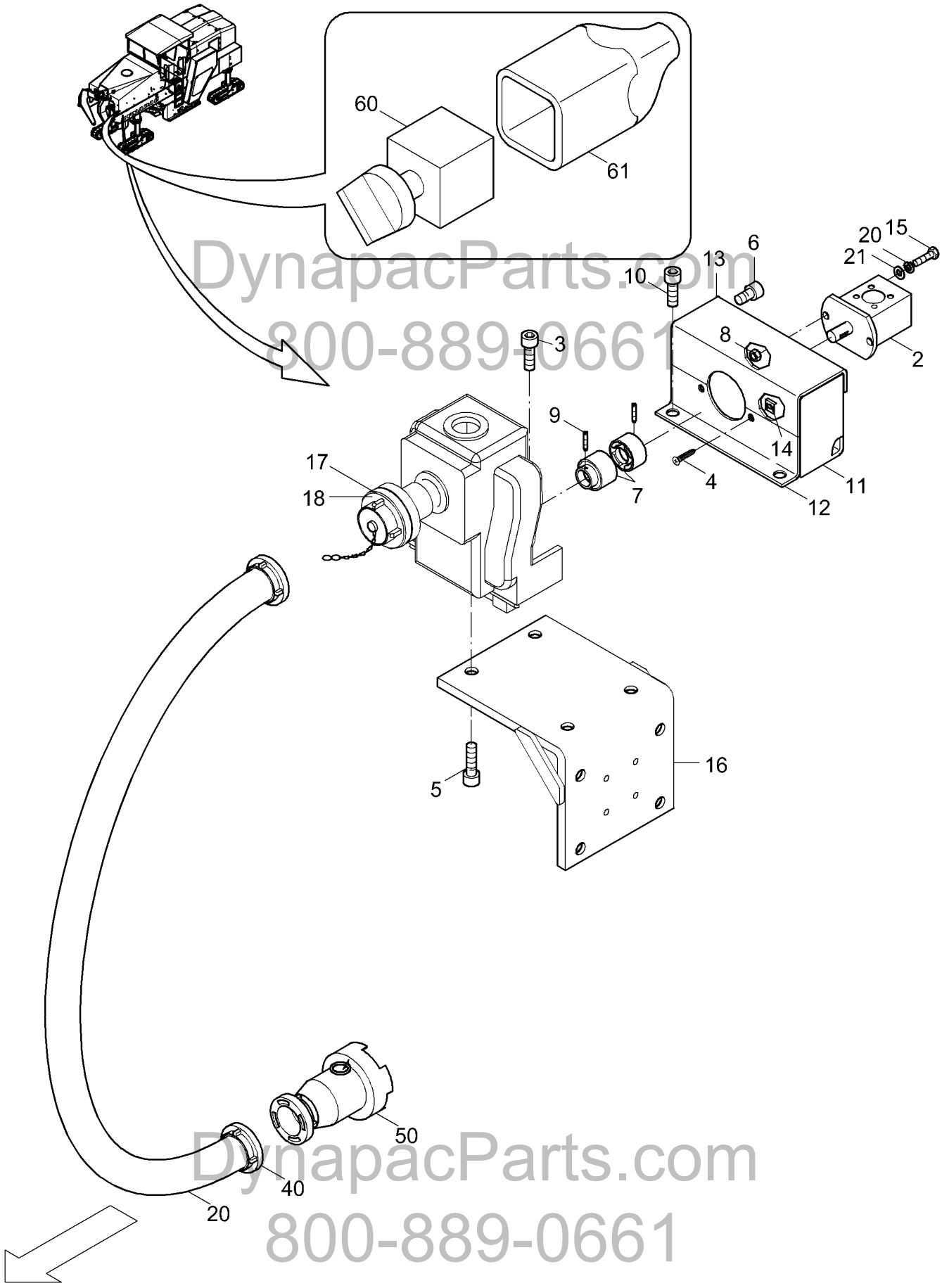

DynapacParts.com
800-889-0661

Pos. Item	Best.-Nr. Part No.	Anz. Qty.	Beschreibung Description	Bemerkung Note
	500090300		Fill pump	
1	967386602	1	Pump	
2	966384152	1	Gear wheel-motor	
3	508031	4	Screw	
4	930452561	2	Tapping screw	
5	508029	4	Screw	
6	508002	2	Cylinder screw	
7	933504045	1	Bowex-clutch	
8	570006	2	Nut	
9	937952484	2	Threaded pin	
10	508012	2	Cylinder screw	
11	500090302	1	Housing lower part	
12	500090307	1	Orifice	
13	500090304	1	Cover	
14	930128669	2	Thin nut	
15	508053	2	Cylinder screw	
16	500090303	1	Support angle	
17	930206204	2	Clutch fast part	
18	930129730	2	Clutch blind part	
20	930665420	1	Suction hose	
21	704130	2	Spring washer	
22	600008	2	Disc	
40	930129729	1	Clutch blind part	
50	930420449	1	Suction strainer	
60	977512170	1	Rotary switch	
61	977599024	1	Rubber cap	

DynapacParts.com
800-889-0661

DynapacParts.com
800-889-0661

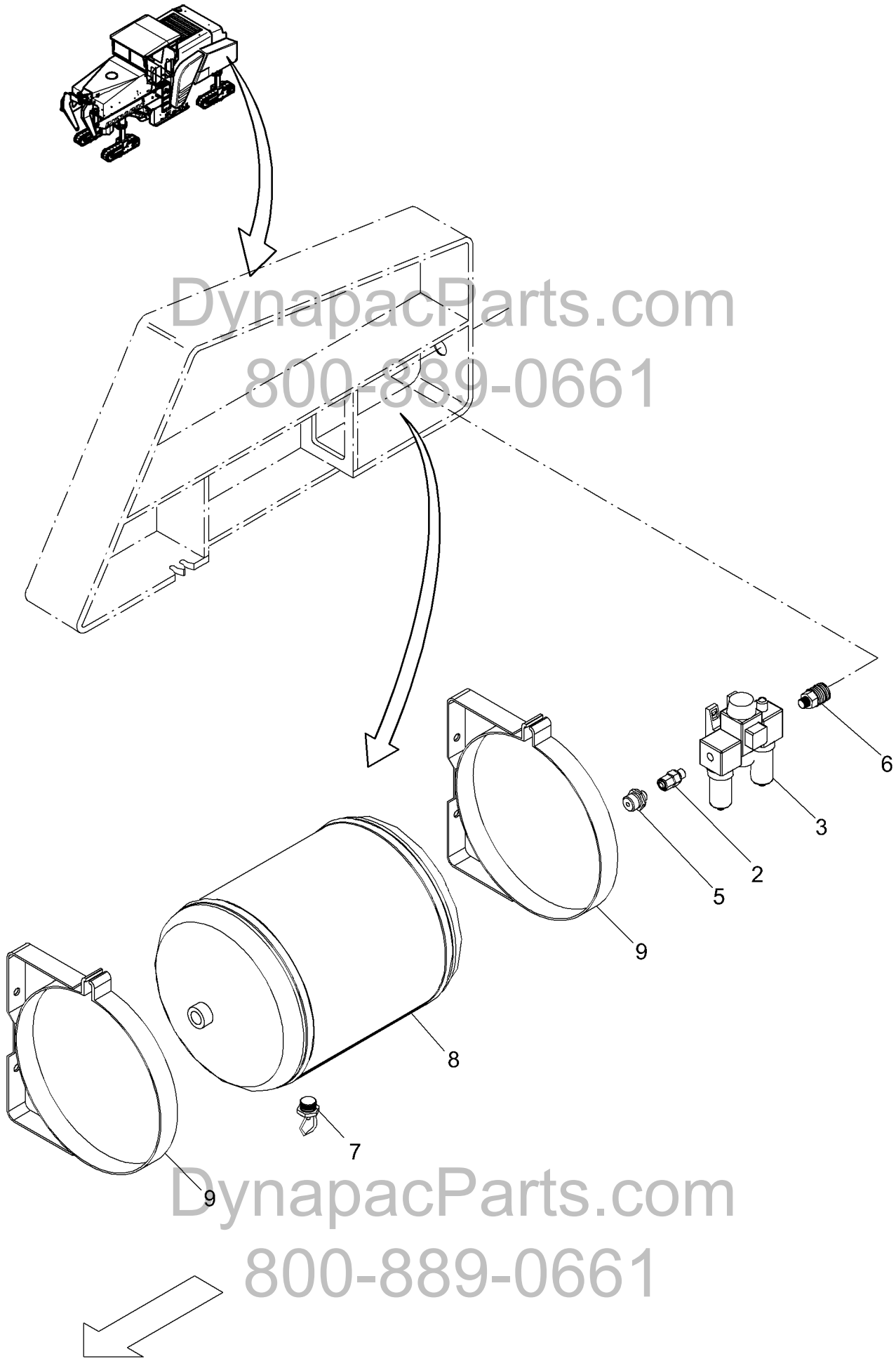

DynapacParts.com
800-889-0661
DynapacParts.com
800-889-0661

Pos. Item	Best.-Nr. Part No.	Anz. Qty.	Beschreibung Description	Bemerkung Note
			Compressed-air plant	
1	930540341	1	Service unit	
2	961155406	1	Stud	
3	930225580	1	Oiler	
5	930176972	1	Double stud	
6	930452600	1	Quick connection	
7	930192020	1	Drain valve	
8	930306540	1	Air tank	
9	934367016	2	Tension strip	

DynapacParts.com
800-889-0661

DynapacParts.com
800-889-0661

DynapacParts.com
800-889-0661

DynapacParts.com
800-889-0661

Pos. Item	Best.-Nr. Part No.	Anz. Qty.	Beschreibung Description	Bemerkung Note
1	930320114	1	Shank bit extensioner	

DynapacParts.com
800-889-0661

DynapacParts.com
800-889-0661

Shank bit extensioner **500-20210**

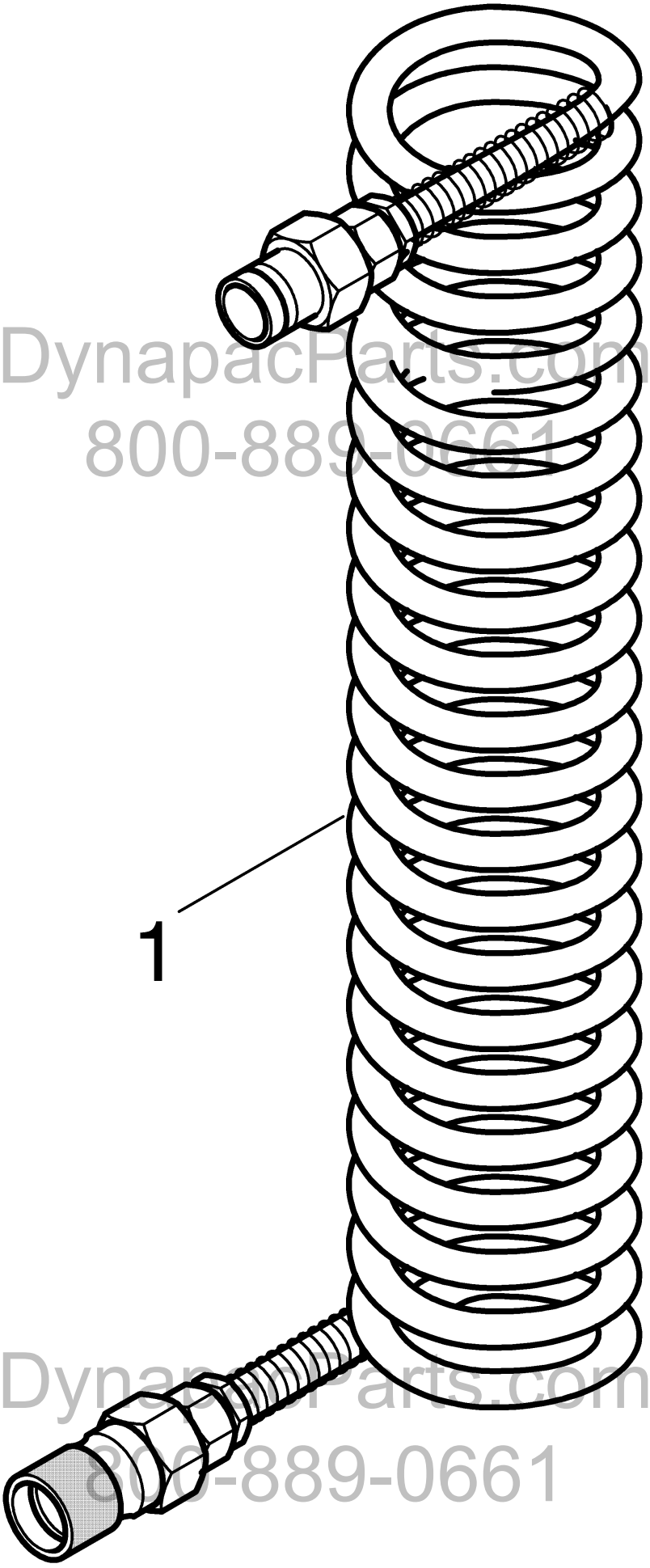

DynapacParts.com
800-889-0661

Pos. Item	Best.-Nr. Part No.	Anz. Qty.	Beschreibung Description	Bemerkung Note
1	930435850	1	Pressure air hose	

DynapacParts.com
800-889-0661

DynapacParts.com
800-889-0661

Pressure air hose **500-20250**